V2.3 2026-11-15

Commercial and Industrial Smart Inverter

ET Series 12-30kW

· Lynx C Series Commercial and Industrial Battery 60kWh
· BAT-C Series Commercial and Industrial Battery 61.4-112.6kWh
· BAT-S Series High-Voltage Battery 15.3-56.3kWh

Solutions Manual

GOODWE

Copyright Notice

Copyright Notice

Copyright©GoodWe Technologies Co., Ltd. 2026. All rights reserved.

Without authorization from GoodWe Technologies Co., Ltd., no content of this manual may be reproduced, distributed, or uploaded to public networks or other third-party platforms in any form.

Trademark Authorization

GOODWEand otherGOODWEtrademarks used in this manual are owned by GoodWe Technologies Co., Ltd. All other trademarks or registered trademarks mentioned in this manual are the property of their respective owners.

NOTE

Due to product version upgrades or other reasons, the content of this document may be updated periodically. Unless otherwise agreed, the content of this document does not supersede the safety precautions on the product label. All descriptions in this document are for guidance only.

Preface

Overview

This document mainly introduces product information, installation and wiring, configuration and commissioning, troubleshooting, and maintenance of the energy storage system consisting of inverters, battery systems, and smart meters. Before installing and using the product, carefully read this manual to understand product safety information and familiarize yourself with product functions and features. The document may be updated from time to time; please obtain the latest version and more product information from the official website.

Applicable Products

The energy storage system includes the following products:

Product Type	Product Information	Description
Inverter	ET 12-30kW	Rated output power12kWto30kW。
Battery system	Lynx C Series 60Kwh Commercial and Industrial Battery System	Single-cluster energy storage capacity60Kwh。 Maximum energy storage capacity with parallel clusters can reach180kWh。
	BAT-S series 15.3-56.3kWh high-voltage battery	Energy storage capacity per cluster 15.3/20.4/25.6/30.7/35.8/40.9/46.0/51.2/56.3 kWh。 Maximum energy storage capacity with parallel clusters can reach 91.8/122.4/153.6/184.2/214.8/245.4/276.0/307.2/337.8 kWh.

Product Type	Product Information	Description
	BAT-C Series 61.4-112.6Kwh Commercial and Industrial Battery System	Single-cluster energy storage capacity61.4/92.1/102.4/112.6kWh。
Meter	GM3000	Monitoring module in the energy storage system; it can detect operating voltage, current, and other information in the system.
	GM330	
	GMK330	
Communication module	WiFi/LAN Kit-20	System operation information can be uploaded to the monitoring platform viaWiFiorLANsignals.
	LS4G Kit-CN、4G Kit-CN、4G Kit-CN-G20or4G Kit-CN-G21(China only)	System operation information can be uploaded to the monitoring platform via4Gsignals.
	Wi-Fi Kit	System operation information can be uploaded to the monitoring platform viaWiFisignals.
	Ezlink3000	In parallel operation scenarios, it is connected to the master inverter. System operation information can be uploaded to the monitoring platform viaWiFiorLANsignals.

Symbol Definitions

⚠DANGER
Indicates a highly hazardous situation that, if not avoided, will result in death or serious injury.
⚠WARNING

Indicates a medium potential hazard that, if not avoided, could result in death or serious injury.
⚠CAUTION
Indicates a low potential hazard that, if not avoided, could result in moderate or minor injury.
NOTE
Emphasis and supplement to the content; it may also provide tips or hints for optimal product use to help you solve a problem or save time.

Table of Contents

1 Safety Precautions 12
1.1 General Safety 12
1.2 Personnel Requirements 13
1.3 System Safety 14
1.3.1 PV String Safety 16
1.3.2 Inverter Safety 17
1.3.3 Battery Safety 18
1.3.4 Meter Safety 21
1.4 Description of Safety Symbols and Certification Marks 21
2 European Declaration of Conformity 24
2.1 Devices with Wireless Communication Function 24
2.2 Devices Without Wireless Communication Function 24
3 European Declaration of Conformity (Battery) 25
4 System Introduction 26
4.1 System Overview 26
4.2 Product Overview 32
4.2.1 Inverter 32
4.2.2 Battery 35
4.2.2.1 Lynx C Series 60 Kwh Commercial and Industrial Battery System 35
4.2.2.2 BAT-S Series 15.3–56.3 Kwh High-Voltage Battery 36
4.2.2.3 BAT Series 61.4-112.6 Kwh Commercial and Industrial Battery 40

System
4.2.3 Smart Meter 50
4.2.4 Smart Communication Stick 51
4.3 Supported Grid Types 52
4.4 System Mode 52
4.5 Functional Features 63
5 Equipment Inspection and Storage 67
5.1 Equipment Inspection 67
5.2 Delivered Items 67
5.2.1 Inverter Deliverables 67
5.2.2 Battery Delivery Items 71
5.2.2.1 Lynx C Series 60 Kwh Commercial and Industrial Battery System 71
5.2.2.2 BAT-S Series 15.3–56.3 Kwh High-Voltage Battery 74
5.2.2.3 BAT Series 61.4-112.6 Kwh Commercial and Industrial Battery System 78
5.2.3 Smart Meter Deliverables (GM3000) 79
5.2.4 Smart Meter Deliverables GM330 & GMK330 80
5.2.4.1 Accessories List 80
5.3 Equipment Storage 81
6 Installation 84
6.1 System Installation and Commissioning Process 84
6.2 Installation Requirements 85
6.2.1 Installation Environment Requirements 85

6.2.2 Installation Foundation Requirements 88
6.2.3 Installation Space Requirements 89
6.2.4 Tool Requirements 91
6.3 Equipment Handling 93
6.4 Install the Inverter 97
6.5 Install the Battery 101
6.5.1 Open the Cabinet Door 101
6.5.2 Install the Lynx C Series 60Kwh Commercial & Industrial Battery System 102
6.5.3 Install BAT-S Series 15.3–56.3 Kwh High-Voltage Battery 103
6.5.4 Installing the BAT Series 61.4–112.6 Kwh Commercial and Industrial Battery System 107
6.6 Install the Meter 109
7 System Wiring 111
7.1 System Wiring Electrical Block Diagram 112
7.2 Detailed System Wiring Diagram 114
7.2.1 Single-Unit System Wiring Detail Drawing 115
7.2.2 Parallel System Wiring Detail Drawing 121
7.3 Material Preparation 125
7.3.1 Switch Preparation 126
7.3.2 Cable Preparation 129
7.3.3 Remove the Baffle Plate 133
7.4 Connect the Protection Ground Cable 135

7.4.1 Inverter Grounding 136

7.4.2 Battery System Grounding 136

7.5 Connect PV Cables 137

7.6 Connecting the Battery System Cables 139

7.6.1 Compatible with the Lynx C Series 60Kwh Commercial & Industrial Battery System 143

7.6.1.1 Introduction to Battery Cable Entry Holes 143

7.6.1.2 Connecting the Inverter and Battery Power Cables 144

7.6.1.3 Connect Battery Communication Cable 148

7.6.1.4 Connect the Internal Power Busbar of the Battery System 150

7.6.1.5 Connect the Air Conditioner Power Cable of the Battery System 151

7.6.1.6 Connect the Battery System Air Conditioner Drain Pipe 152

7.6.1.7 Turn on the Fire Suppression Switch 152

7.6.1.8 Install the Baffle Plate 154

7.6.2 Compatible with BAT-S Series 15.3–56.3 Kwh High-Voltage Battery 154

7.6.2.1 Connecting the Inverter and Battery Power Cables 155

7.6.2.2 Connect Inter-Battery Power Cables 158

7.6.2.3 Connect Communication Cable 158

7.6.3 Compatible with the BAT Series 61.4-112.6Kwh Commercial & Industrial Battery System 160

7.6.3.1 Introduction to Battery Cable Entry Holes and System Wiring 161

7.6.3.2 Connecting the Inverter and Battery Power Cables 162

7.6.3.3 Connect Battery Communication Cable 164

7.6.3.4 Connect the Battery Air Conditioner Cable 165
7.6.3.5 Install the Bottom Plate and Release the EPO Switch 166
7.7 Connecting the AC Cables 167
7.8 Connecting the Meter Cables 168
7.9 Connecting the Inverter Communication Cable 173
7.10 Connecting the Smart Communication Stick 180
8 System Trial Operation 183
8.1 Pre-Power-on Inspection of the System 183
8.2 System Power-On 183
8.3 Indicator Light Introduction 185
8.3.1 Inverter Indicators 185
8.3.2 Battery Indicator 186
8.3.3 Smart Meter Indicator Light 188
8.3.4 Smart Communication Stick LED 189
8.4 Close the Cabinet Door 194
9 System Commissioning and Plant Monitoring 196
9.1 Device Commissioning and Plant Monitoring via the SEMS+ App 196
9.2 Device Commissioning and Plant Monitoring via SEMS+ WEB 197
10 System Maintenance 199
10.1 System Power-Off 199
10.2 Equipment Dismantling 200
10.3 Equipment Disposal 201

10.4 Regular Maintenance 201
10.5 Faults 202
10.5.1 View Fault/Alarm Details 203
10.5.2 Fault Information and Handling Methods 203
10.5.2.1 System Fault 204
10.5.2.2 Inverter Fault 205
10.5.2.2.1 Fault Handling (Fault Codes F01-F40) 205
10.5.2.2.2 Troubleshooting (Fault Codes F41-F80) 223
10.5.2.2.3 Fault Handling (Fault Codes F81-F121) 232
10.5.2.2.4 Troubleshooting (Fault Codes F122-F163) 242
10.5.2.2.5 Fault Symptom Handling 254
10.5.2.3 Battery Fault 274
10.5.3 Handling After Fault Clearing 289
10.5.3.1 Clear AFCI Failure Warning 289
11 Technical Parameters 291
11.1 Inverter Parameters 291
11.2 Battery Parameters 306
11.2.1 Lynx C Series 60kWh C&I Battery System 306
11.2.2 BAT-S Series 15.3-56.3kWh High Voltage Battery 308
11.2.3 BAT-C Series 61.4-112.6kWh C&I Battery System 314
11.3 Smart Meter Technical Specifications 318
11.3.1 GM330 318

11.3.2 GM3000 319
11.3.3 GMK330 320
11.4 Smart Communication Stick Technical Specifications 321
11.4.1 4G Kit-CN-G21 322
11.4.2 4G Kit-CN-G20 323
11.4.3 WiFi/LAN Kit-20 324
11.4.4 Ezlink3000 324
11.5 Ezmanager3000 Technical Specifications 325
12 Appendix 327
12.1 FAQ 327
12.1.1 How to Perform Meter/CT Auxiliary Detection? 327
12.1.2 How to Upgrade the Device Version 327
12.2 Abbreviations 328
12.3 Terminology Explanation 331
12.4 Meaning of Battery SN Code 332
12.5 Safety Regulation Country 333
13 Contact Details 341

1 Safety Precautions

Always observe the safety precautions contained in this document when operating the equipment.

⚠WARNING
The equipment has been designed and tested in strict accordance with safety regulations. However, as electrical equipment, relevant safety instructions must be observed before any operation on the equipment. Improper operation may cause serious injury or property damage.

1.1 General Safety

NOTE

- Due to product version upgrades or other reasons, the content of this document may be updated periodically. Unless otherwise agreed, the content of this document does not supersede the safety precautions on the product label. All descriptions in this document are for guidance only.
- Read this document carefully before installing the equipment to understand the product and precautions.
- All operations on the equipment must be performed by professional and qualified electrical technicians, who must be familiar with the relevant standards and safety regulations of the project location.
- When operating the equipment, use insulated tools and wear personal protective equipment to ensure personal safety. When touching electronic components, wear ESD gloves, ESD wrist straps, anti-static clothing, etc., to provide Protection for the equipment against electrostatic damage.
- Unauthorized disassembly or modification may cause equipment damage, which is not covered by the warranty.
- Equipment damage or personal injury caused by failure to install, use, or configure the equipment in accordance with this document or the corresponding user manual is not within the scope of the equipment manufacturer's responsibility.
- For more product warranty information, please visit the official website:https://emea.goodwe.com/warranty。

1.2 Personnel Requirements

NOTE

To ensure the safety, compliance, and efficiency of the entire process of equipment transportation, installation, wiring, operation, and maintenance, operations must be performed by professional or qualified personnel.

1. Professional or qualified personnel include:
   - Personnel who have mastered the working principles, system structure, and knowledge of risks and hazards of the equipment, and have received professional operation training or have extensive practical experience.
   - Personnel who have received relevant technical and safety training, possess certain operational experience, can recognize the dangers that specific operations may pose to themselves, and can take protective measures to minimize risks to themselves and others.
   - Qualified electrical technicians who meet the regulatory requirements of the country/region where they are located.
   - Have a degree in electrical engineering / an advanced diploma in electrical discipline or equivalent / professional qualification in the electrical field, and at least 2/3/4 years of experience in testing and supervising work using safety standards for electrical equipment.
2. Personnel involved in special tasks such as electrical work, work at heights, and operation of special equipment must hold valid qualification certificates required by the location of the equipment.
3. Medium-voltage equipment operations must be performed by certified high-voltage electricians.
4. Replacement of equipment and components is only permitted to be performed by authorized personnel.

1.3 System Safety

DANGER

- Before making electrical connections, disconnect all upstream switches of the equipment to ensure that the equipment is de-energized. Live operation is strictly prohibited; otherwise, hazards such as electric shock may occur.
- For devices that support PV string connection, the PV input terminals have a weak surge current withstand capability. It is strictly prohibited to directly power on the device through the PV port using a DC voltage source. If power-on through the PV port is required, follow the steps below. If the equipment is damaged due to violation of these instructions, it is human-caused damage and is not covered by the product warranty.
  1. First, limit the output current of the DC voltage source within the Max. Current from Grid range allowed by the PV port.
  2. Then close the inverter's DC Switch.
  3. Finally, slowly increase the DC source output voltage from zero to the target value at a rate of ≤50 V/s.
- To prevent personal danger or equipment damage caused by live operation, a circuit breaker must be added on the voltage input side of the equipment.
- Applicable laws, regulations, standards, and specifications shall be observed during all operations such as transportation, storage, installation, operation, use, and maintenance.
- The specifications of cables and components used for electrical connections shall comply with local laws, regulations, standards, and specifications.
- Use the cable connectors supplied with the package to connect equipment cables. If connectors of other models are used, any resulting equipment damage is not within the responsibility of the equipment manufacturer.
- Ensure all equipment cables are correctly and securely connected without looseness. Improper wiring may cause poor contact or equipment damage.
- The equipment's Protection ground cable must be securely connected.
- To provide Protection for the equipment and its components against damage during transportation, ensure that transportation personnel have received professional training. Record the operation steps during transportation, keep the equipment balanced, and prevent it from falling.
- The equipment is heavy. Allocate corresponding personnel according to the equipment Weight to prevent the equipment from exceeding the Weight range that a person can handle and injuring personnel.
- Ensure the equipment is placed stably and is not tilted. Tipping over may cause equipment damage and personal injury.

⚠WARNING

- During equipment installation, avoid applying load to the wiring terminals; otherwise, terminal damage may occur.
- Avoid excessive tensile force on cables; otherwise, poor connections may occur. Reserve an appropriate cable length during wiring to avoid tensioned cables.
- Correctly secure and support cables to prevent cable self-weight, tensile force, bending force, torsional force, or other external mechanical stress from acting on terminals or connectors for extended periods.
- Ensure the Protection ground wire is reliably connected and has an appropriate margin. Under unexpected tensile force or other external mechanical stress, ensure that the Protection ground wire does not disconnect before other conductors.
- Cables of the same type should be bundled together; cables of different types should be routed at least 30 mm apart. Do not intertwine or cross-route them.
- Using cables in high-temperature environments may cause insulation aging or damage. Maintain a distance of at least 30 mm between cables and heat-generating components or the periphery of heat source areas.

1.3.1 PV String Safety

⚠WARNING

- Ensure the module frames and racking system are properly grounded.
- After completing DC cable connections, ensure the cables are securely connected and not loose. Improper wiring may cause poor contact or high impedance and damage the inverter.
- Use a multimeter to measure the positive and negative poles of the DC cables to ensure correct polarity and no reverse connection, and that the voltage is within the permitted range.
- Use a multimeter to measure the DC cables to ensure correct polarity and no reverse connection; the voltage should be below the maximum DC input voltage. Damage caused by reverse connection and Overvoltage is not within the responsibility of the equipment manufacturer.
- The PV string output does not support grounding. Before connecting PV strings to the inverter, ensure that the minimum insulation resistance to ground of the PV strings meets the minimum insulation impedance requirement (R = Max. Input Voltage (V)/30 mA).
- Do not connect the same PV string to multiple inverters; otherwise, the inverter may be damaged.
- PV modules used with the inverter must comply with IEC 61730 Class A standard.
- When the PV string input voltage or input current is high, the inverter output power may be derated.

1.3.2 Inverter Safety

⚠WARNING

- Ensure the voltage and frequency at the grid connection point comply with the inverter grid connection specifications.
- It is recommended to add Protection devices such as circuit breakers or fuses on the AC side of the inverter. The specifications of the Protection devices must be greater than 1.25 times the inverter AC output Max. Current.
- If the inverter triggers fewer than 5 Arc Failure alarms within 24 hours, the alarm can be automatically cleared. After the fifth Arc Failure alarm, the inverter will shut down for Protection; the inverter can operate normally only after the fault is cleared.
- In a PV system, if no battery is configured, it is not recommended to use the BACK-UP function; otherwise, it may cause a risk of system power outage.
- Changes in grid voltage and frequency may cause the inverter output power to be derated.

1.3.3 Battery Safety

⚠DANGER

- Before operating equipment in the system, ensure that the equipment is powered off to avoid electric shock hazards. During equipment operation, strictly follow all safety precautions in this manual and the safety labels on the equipment.
- Do not disassemble, modify, or repair the battery or control box without official authorization from the equipment manufacturer; otherwise, electric shock hazards or equipment damage may occur. Losses caused thereby are not within the scope of the equipment manufacturer's responsibility.
- Do not impact, pull, drag, squeeze, or step on the equipment, and do not place the battery in fire; otherwise, the battery may explode.
- Do not place the battery in a high-temperature environment. Ensure there is no heat source near the battery and that it is not exposed to direct sunlight. If the ambient temperature exceeds 60°C, a fire may occur.
- Do not use the battery or control box if there are obvious defects, cracks, damage, or other conditions. Battery damage may cause electrolyte leakage.
- Do not move the battery system while the battery is operating. If you need to replace or add batteries, contact the after-sales service center.
- Battery Short Circuit may cause personal injury; the instantaneous high current caused by a short circuit can release a large amount of energy and may cause a fire.
- The battery DC circuit breaker shall comply with the requirements of the AS/NZS 5139 standard.
- A battery is only allowed to be connected to one energy storage inverter. It is prohibited to directly connect the same battery to multiple energy storage inverters. Multiple inverters sharing one battery may cause abnormal return currents or circulating currents, and may cause GFCI Protection and battery overcurrent; in severe cases, it may damage the battery and inverter.

⚠WARNING

- Battery Current may be affected by factors such as temperature, humidity, weather conditions, etc., which may cause battery current limiting and affect the load-carrying capability.
- If the battery cannot start, contact the after-sales service center as soon as possible. Otherwise, the battery may be permanently damaged.
- Perform regular inspection and maintenance of the battery according to the battery maintenance requirements.

Emergency Measures

- Battery Electrolyte Leakage
  If the battery module leaks electrolyte, avoid contact with the leaked liquid or gas. Electrolyte is corrosive, and contact may cause skin irritation and chemical burns. If you accidentally come into contact with leaked material, perform the following actions:
  - Inhalation: Evacuate from the contaminated area and seek medical help immediately.
  - Eye contact: Flush with clean water for at least 15 minutes and seek medical help immediately.
  - Skin contact: Thoroughly wash the contact area with soap and clean water and seek medical help immediately.
  - Ingestion: Induce vomiting and seek medical assistance immediately.
- Fire
  - When the battery temperature exceeds 150°C, there is a fire risk. If the battery catches fire, it may release toxic and harmful gases.
  - To avoid fire, ensure that CO2, Novec1230, or FM-200 fire extinguishers are available near the equipment.
  - When extinguishing a fire, do not use ABC dry powder fire extinguishers. Firefighters must wear protective clothing and self-contained breathing apparatus.
- Battery Fire Suppression Function Triggered
  For batteries equipped with the optional fire suppression function, perform the following operations after the fire suppression function is triggered:
  - Immediately turn off the main power switch to ensure that no current flows

through the battery system.
- Perform a preliminary visual inspection of the battery to check for damage, deformation, leakage, or odor, and inspect the battery enclosure, connectors, and cables.
- Use a temperature sensor to measure the temperature of the battery and its surroundings to ensure there is no overheating risk.
- Isolate and label damaged batteries, and dispose of them properly in accordance with local regulations.

1.3.4 Meter Safety

⚠WARNING

If the grid voltage fluctuation exceeds 265 V, long-term overvoltage operation may damage the meter. It is recommended to add a fuse with a Rated Current of 0.5 A on the voltage input side of the meter for Protection of the meter.

1.4 Description of Safety Symbols and Certification Marks

⚠DANGER

- After the equipment is installed, the labels and warning signs on the enclosure must be clearly visible and must not be obscured, altered, or damaged.
- The following descriptions of enclosure warning labels are for reference only; refer to the labels actually used on the equipment.

No.	Symbol	Meaning
1		Potential hazards exist when the equipment is running. Take proper protective measures when operating the equipment.

No.	Symbol	Meaning
2		High voltage hazard. High voltage is present when the equipment is running. Before operating the equipment, ensure that the equipment is powered off.
3		The inverter surface may be hot. Do not touch it while the equipment is running; otherwise, burns may result.
4		Use the equipment properly. Using the equipment under extreme conditions may pose an explosion risk.
5		The battery contains flammable materials. Beware of fire.
6		The equipment contains corrosive electrolyte. Avoid contact with leaked electrolyte or emitted gases.
7		Delayed discharge. After the equipment is powered off, wait 5 minutes for the equipment to fully discharge.
8		Keep the equipment away from open flames or ignition sources.
9		Keep the equipment away from areas accessible to children.
10		Use the equipment properly. Using the equipment under extreme conditions may pose an explosion risk.
11		The battery contains flammable materials. Beware of fire.
12		Do not lift the equipment after the battery system wiring is completed or while the battery system is in operation.
13		Do not extinguish with water.
14		Read the product manual carefully before operating the equipment.
15		Wear personal protective equipment during installation, operation, and maintenance.

No.	Symbol	Meaning
16		Do not dispose of the equipment as household waste. Dispose of the equipment in accordance with local laws and regulations, or return it to the equipment manufacturer.
17		Do not directly disconnect or plug/unplug the DC terminals while the equipment is operating.
18		Connection point for the Protection grounding conductor.
19		Recycling mark.
20		CE Certification mark.
21		TUV mark.
22		RCM mark.

2 European Declaration of Conformity

2.1 Devices with Wireless Communication Function

GoodWe Technologies Co., Ltd. hereby declares that ET series devices with a wireless communication module comply with the requirements of Directive 2014/53/EU.
The full text of the EU declaration of conformity is available at the following internet address:
https://en.goodwe.com/Ftp/EN/Downloads/Certificate/GW_ET 12-30kW_EU Declaration of Conformity_MULTI.pdf

- Radio Equipment Directive 2014/53/EU (RED)
- Restrictions of Hazardous Substances Directive 2011/65/EU and (EU) 2015/863 (RoHS)
- Waste Electrical and Electronic Equipment 2012/19/EU
- Registration, Evaluation, Authorization and Restriction of Chemicals (EC) No 1907/2006 (REACH)

2.2 Devices Without Wireless Communication Function

GoodWe Technologies Co., Ltd. hereby declares that ET series devices without a wireless communication module meet the requirements of the following directives:

- Electromagnetic compatibility Directive 2014/30/EU (EMC)
- Electrical Apparatus Low Voltage Directive 2014/35/EU (LVD)
- Restrictions of Hazardous Substances Directive 2011/65/EU and (EU) 2015/863 (RoHS)
- Waste Electrical and Electronic Equipment 2012/19/EU
- Registration, Evaluation, Authorization and Restriction of Chemicals (EC) No 1907/2006 (REACH)

3 European Declaration of Conformity (Battery)

GoodWe Technologies Co., Ltd. hereby declares that Lynx C, BAT-S, and BAT series batteries meet the requirements of the following directives:
The full text of the EU declaration of conformity is available at the following internet address:

- Lynx C Series:https://en.goodwe.com/Ftp/EN/Downloads/Certificate/GW_Lynx-C-60kWh_Certificate_EU-Declaration-of-Conformity_POLY.pdf
- BAT-S Series:https://en.goodwe.com/Ftp/EN/Downloads/Certificate/GW_BAT25-56_EU-Declaration-of-Conformity_POLY.pdf
- BAT Series: https://en.goodwe.com/Ftp/EN/Downloads/Certificate/GW_BAT-60-112_EU-Declaration-of-Conformity_POLY.pdf

- Electromagnetic compatibility Directive 2014/30/EU (EMC)
- Electrical Apparatus Low Voltage Directive 2014/35/EU (LVD)
- Restrictions of Hazardous Substances Directive 2011/65/EU and (EU) 2015/863 (RoHS)
- Regulation (EU) 2023/1542 Article 12 - Safety of stationary battery energy storage systems
- Regulation (EU) 2023/1542 Article 10 - Performance and durability requirements for rechargeable industrial batteries, LMT batteries and electric vehicle batteries
- Regulation (EU) 2023/1542 Article 14 - Information on the state of health and expected lifetime of batteries
- Waste Electrical and Electronic Equipment 2012/19/EU
- Registration, Evaluation, Authorization and Restriction of Chemicals (EC) No 1907/2006 (REACH)

4 System Introduction

4.1 System Overview

The commercial and industrial smart inverter solution integrates the inverter, battery, smart meter, smart communication stick, and other devices. In the PV system, it converts solar energy into electrical energy to meet commercial and industrial power demand. The energy IoT devices in the system manage powered devices by identifying the overall power condition in the system, thereby enabling intelligent management of power supplied to loads, stored in the battery, or exported to the grid, etc.

⚠WARNING

- Battery models shall be selected according to the inverter and battery compatibility list. For requirements for batteries used in the same system, such as whether models can be mixed and whether capacities must be consistent, refer to the user manual of the corresponding battery model or contact the battery manufacturer for relevant requirements. Inverter and battery compatibility list:https://en.goodwe.com/Ftp/EN/Downloads/User%20Manual/GW_Battery%20Compatibility%20Overview-EN.pdf。
- Due to product version upgrades or other reasons, the document content may be updated from time to time. For the compatibility between inverters and IoT products, refer to:https://en.goodwe.com/Ftp/EN/Downloads/User%20Manual/GW_Compatibility-list-of-GoodWe-inverters-and-IoT-products-EN.pdf。
- PV systems are not suitable for connecting devices that rely on stable power supply, such as life-sustaining medical equipment. Ensure that a power outage of the system will not cause personal injury.
- In a PV system, if no battery is configured, it is not recommended to use the BACK-UP function; otherwise, it may cause a risk of system power outage.
- The BACK-UP port does not support connection to autotransformers or isolation transformers.
- Battery Current may be affected by factors such as temperature, humidity,

⚠WARNING

weather conditions, etc., which may cause battery current limiting and affect the load-carrying capability.

- The inverter has a UPS function with a switching time of <10 ms. Ensure that the BACK-UP load capacity is < the inverter's Rated Power. Otherwise, the UPS function may fail during a Grid Power Outage.
- In a PV system, if no battery is configured, it is not recommended to use the BACK-UP function; otherwise, it may cause a risk of system power outage.
- For detailed networking and wiring schemes for each scenario, refer to: System Wiring Detailed Diagram.
- When the inverter is in off-grid mode, it can supply power to ordinary household loads for normal use. However, the following loads must be restricted, for example:
  - inductive load: The inductive load power < 0.4 times the inverter's rated output power.
  - Capacitive load: Total power ≤ 0.66 x inverter rated output power.
  - The inverter does not support half-wave loads. Half-wave load: Some old or non-EMC-compliant household appliances (such as hair dryers or small heaters using half-wave rectification) may not work properly.
- In a fully off-grid inverter system, if the battery is exposed to low-light or rainy weather for a long time and cannot be recharged in time, it may be over-discharged, causing battery performance degradation or damage. To ensure long-term stable operation of the system, avoid completely discharging the battery. Recommended measures are as follows:
  - During off-grid operation, set the minimumSOCProtection threshold; it is recommended to set the off-grid batterySOClower limit to30%。
  - WhenSOCapproaches the Protection threshold, the system will automatically enter load limiting or Protection mode.
  - If the sunlight is insufficient for several consecutive days and the batterySOCis too low, the battery should be replenished in time through an external energy source (such as a generator or grid-assisted charging).
  - Regularly check the battery status to ensure it is within the safe operating range.
  - It is recommended to fully charge and fully discharge the battery once every six months to calibrateSOCaccuracy.

<table>
<tr><th colspan="5">Off-Grid Load Capacity Description</th></tr>
<tr><td rowspan="2">Load Type</td><td>GW15K-ET
GW20K-ET
GW25K-ET
GW29.9K-ET
GW30K-ET</td><td>GW12KL-ET
GW18KL-ET</td><td>GW15K-ET
GW20K-ET
GW25K-ET
GW29.9K-ET
GW30K-ET</td><td>GW12KL-ET
GW18KL-ET</td></tr>
<tr><td colspan="2">Single-Phase</td><td colspan="2">Three-Phase</td></tr>
<tr><td>Rated Power of a single inductive load (kVA)</td><td colspan="2">2.2</td><td>4</td><td>2</td></tr>
<tr><td>Total Rated Power of multiple inductive loads (kVA)</td><td colspan="2">2.2</td><td>8</td><td>4</td></tr>
<tr><td>Capacitive load (kVA)</td><td colspan="2">0.33Pn/3</td><td colspan="2">0.33Pn</td></tr>
<tr><td>Half-wave load</td><td colspan="4">Not supported</td></tr>
<tr><td colspan="5">Note:
• Pn: Inverter rated output power.
• When two or more units are connected in parallel, the allowable total Rated Power of inductive loads = Rated Power of a single inductive load * number of parallel units * 80%.
• Half-wave load: Some old or non-EMC-compliant household appliances (such as hair dryers or small heaters using half-wave rectification).
• If the calculated total Rated Power of multiple inductive loads is less than the maximum Rated Power of a single inductive load, the total Rated Power of the loads shall be taken as the Rated Power of that single unit.
• When supplying inductive loads, it is recommended to use a frequency converter.</td></tr>
</table>

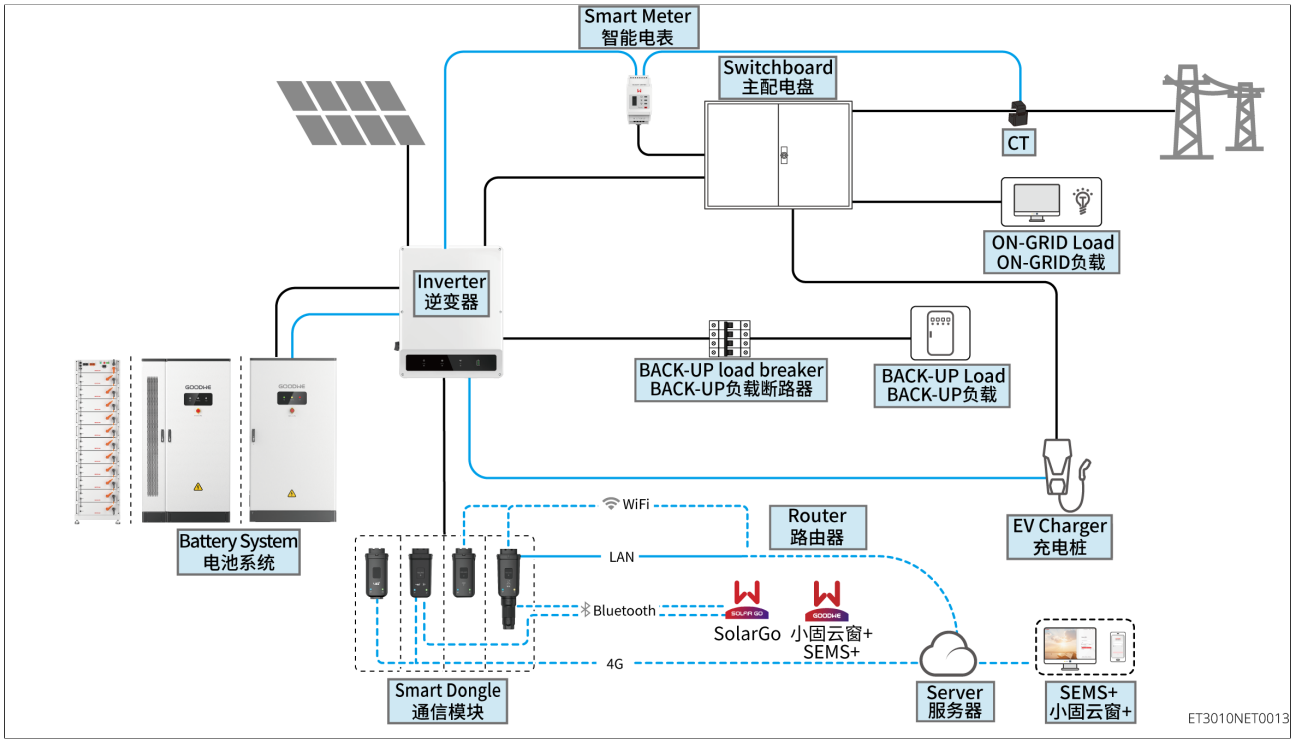

Figure1 System Wiring Diagram

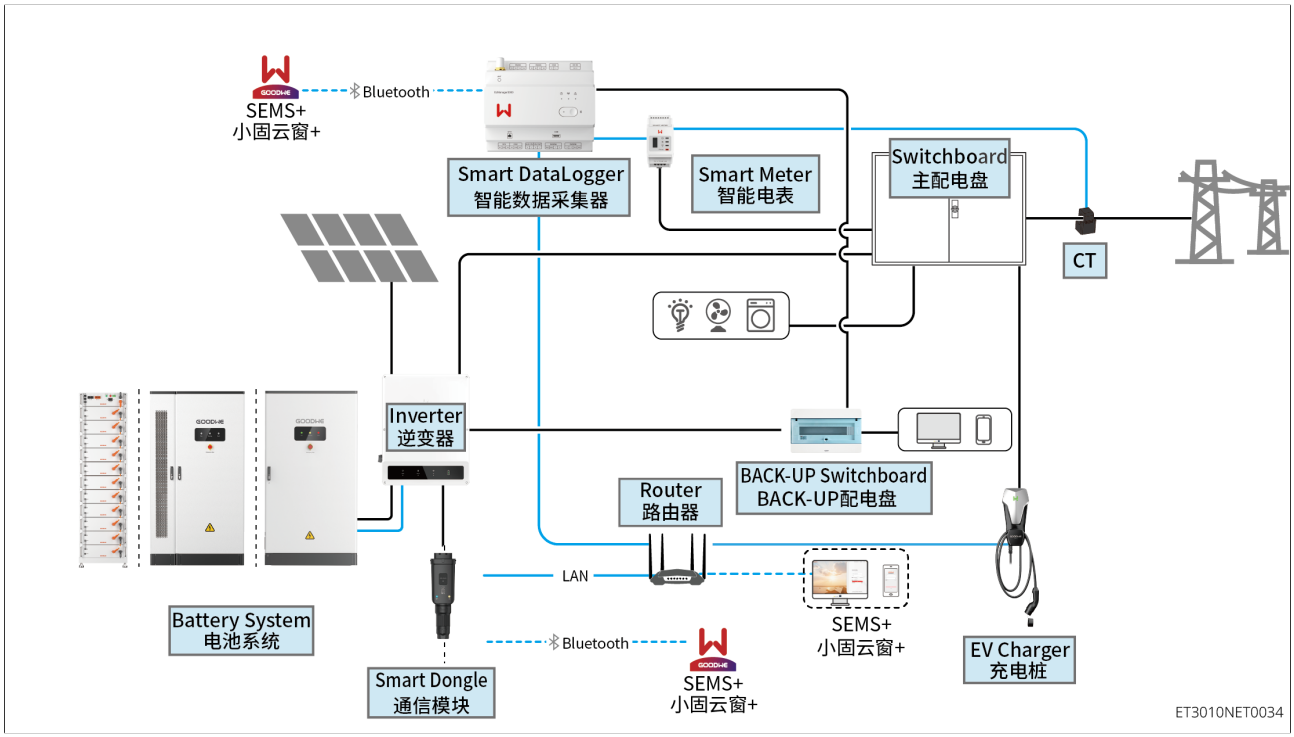

Figure2 Networking diagram with EzManager3000

Device Type	Model	Description
Inverter	GW12KL-ET GW18KL-ET GW15K-ET GW20K-ET GW25K-ET GW29.9K-ET GW30K-ET	• Up to 4 inverters are supported to form a parallel system. • Battery-ready models do not support forming a parallel system when the battery function is not activated. • Only units with the same AC output voltage are supported to form a parallel system. • GW12KL-ET and GW18KL-ET only support BAT-S Series 15.3kWh–56.3kWh batteries, and the following version requirements must be met: ◦ Inverter ARM software version 17.449 or later. ◦ Inverter DSP software version 13.13011 or later. • In coupled scenarios, dual meters can be used to simultaneously monitor the power generation of the grid-tied inverter and the load consumption. The following version requirements must be met: ◦ Inverter ARM software version 15.441 or later. ◦ Inverter DSP software version 11.11060 or later. ◦ SolarGo version 6.9.0 or later.
Battery system	GW60KWH-D-10 GW60KWH-D-10 (without expansion cabinet)	The system supports up to 3 battery clusters in parallel.

Device Type	Model	Description
	GW15.3-BAT-I-G10 GW20.4-BAT-I-G10 GW25.6-BAT-I-G10 GW30.7-BAT-I-G10 GW35.8-BAT-I-G10 GW40.9-BAT-I-G10 GW46.0-BAT-I-G10 GW51.2-BAT-I-G10 GW56.3-BAT-I-G10	• Up to 6 battery clusters are supported in parallel. • Battery systems of different models cannot be mixed for parallel cluster operation. • Due to the battery operating Voltage Range limitation, GW15.3-BAT-I-G10 and GW20.4-BAT-I-G10 do not support GW15K-ET, GW20K-ET, GW25K-ET, and GW30K-ET.
	GW61.4-BAT-AC-G10 GW92.1-BAT-AC-G10 GW102.4-BAT-AC-G10 GW112.6-BAT-AC-G10	Only a single cluster is supported.
Smart Data Logger	EzManager3000	EzManager supports unified dispatch and management of home energy. It supports station-level Power Control functions such as AI Mode, self-consumption, and grid-connected Power Control, enabling station-level energy optimization. • Connects to smart meters, grid-tied inverters, etc. via RS485. • If third-party grid-tied inverters are used in the system, the data of the third-party inverters cannot be collected by EzManager, which may affect EMS dispatch. Please use with caution. • Software Version Requirements: ◦ For a single inverter: EzManager3000 software version V00 or later. ◦ For parallel inverters: EzManager3000 software version V04 or later.

Device Type	Model	Description
Smart Meter	• GM3000 • GM330 • GMK330	• GM3000: supplied with the inverter; CT is not replaceable; CT ratio: 120 A: 40 mA • GM330: CT can be supplied by GoodWe or purchased by the user; CT transformation ratio requirement: nA: 5A ◦ nA: CT primary-side input current; the range of n is 200–5000 ◦ 5A: CT secondary-side output current • GMK330: CT is shipped with the meter; CT ratio: ◦ 120A: 40mA ◦ 200A: 50mA (Brazil only)
Communication module	• WiFi/LAN Kit-20 • Wi-Fi Kit • LS4G Kit-CN, 4G Kit-CN, 4G Kit-CN-G20, or 4G Kit-CN-G21 (China only) • Ezlink3000	• When operating as a single unit, use the WiFi/LAN Kit-20, Wi-Fi Kit, LS4G Kit-CN, 4G Kit-CN, 4G Kit-CN-G20, or 4G Kit-CN-G21 module. If using the WiFi/LAN Kit-20 to replace the Wi-Fi Kit, upgrade the inverter ARM firmware to version 08.401 or later before replacing it with the WiFi/LAN Kit-20. • During parallel operation, only the master inverter needs to be connected to the Ezlink3000; slave inverters do not need to be connected to a communication module. The Ezlink3000 firmware version must be 04 or later.

4.2 Product Overview

4.2.1 Inverter

The inverter controls and optimizes energy flow in the PV system through the integrated energy management system. The power generated in the PV system can be used for loads, stored in batteries, exported to the grid, and so on.

NOTE
Inverters of different power ranges differ in appearance; refer to the actual product.

No.	Model	Rated output power	Rated Output Voltage	Number of Battery Ports
1	GW12KL-ET	12kW	220V, 3L/N/PE	1
2	GW18KL-ET	18kW		2
3	GW15K-ET	15kW	380/400V，3L/N/PE	1
4	GW20K-ET	20kW		1
5	GW25K-ET	25kW		2
6	GW29.9K-ET	29.9kW		2
7	GW30K-ET	30kW		2

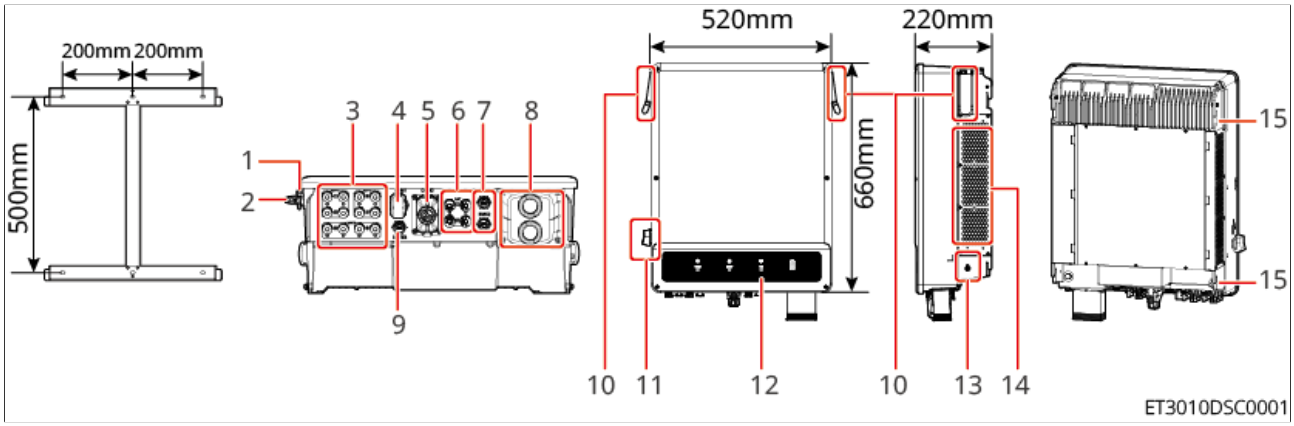

Figure3 Component Introduction

Component Introduction

No.	Component/Silkscreen	Description

1	DC Switch Lock Hole	Australia only.
2	DC Switch	Controls the connection or disconnection of the DC input.
3	PVInput Terminals	For connectingPVmodule DC input cables. • GW15K-ET，GW20K-ET，GW12KL-ET x 2 • GW25K-ET，GW29.9K-ET，GW30K-ET，GW18KL-ET x 3
4	Communication Module Port	For connecting a communication module; supports 4G and Wi-Fi/LAN modules.
5	Communication Port	Connect communication cables; supports communication with DRED, Remote Shutdown, Rapid Shutdown, RCR, EMS, and generator.
6	Battery Connection Port	For connecting battery DC cables. • GW15K-ET，GW20K-ET，GW12KL-ET x 1 • GW25K-ET，GW29.9K-ET，GW30K-ET，GW18KL-ET x 2
7	BMS Communication Port	For connecting battery communication cables. • GW15K-ET，GW20K-ET，GW12KL-ET x 1 • GW25K-ET，GW29.9K-ET，GW30K-ET，GW18KL-ET x 2
8	AC Port	For connecting AC cables, ON-GRID and BACK-UP ports.
9	METER Communication Port	For connecting a smart meter.
10	Handle	Carry the inverter.
11	Indicator light	Indicates the operating status of the inverter.
12	Protection grounding terminal	Connect the Protection ground wire of the enclosure.

13	Fan	Inverter heat dissipation
14	Inverter mounting slot	Mount and lock the inverter.

Australian junction box dimensions

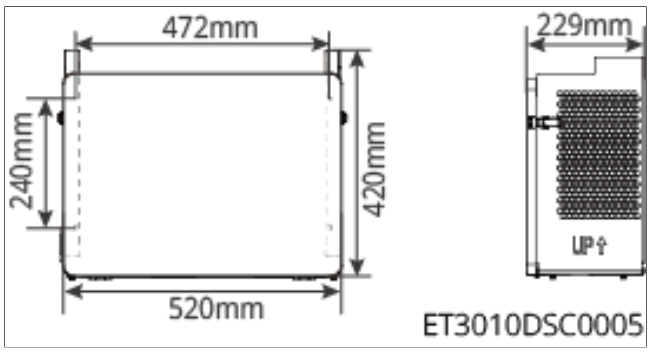

Figure4 Australian junction box dimensions

4.2.2 Battery

The battery system consists of a PCU and PACKs.
The battery system can store and release energy according to the requirements of the PV energy storage system; the input and output ports of the energy storage system are both high-voltage DC.

NOTE

- After a single battery cabinet is installed, capacity expansion by addingPACKs is not supported.
- BATseries battery system can be expanded by adding battery cabinets of the same model and part number within one year after installation; for details, please consult after-sales service.

4.2.2.1 Lynx C Series 60 Kwh Commercial and Industrial Battery System

No.	Model	Rated Energy (kWh)	AC Compartment Included
1	GW60KWH-D-10	60	Yes
2	GW60KWH-D-10(No Expansion Cabinet)	60	No

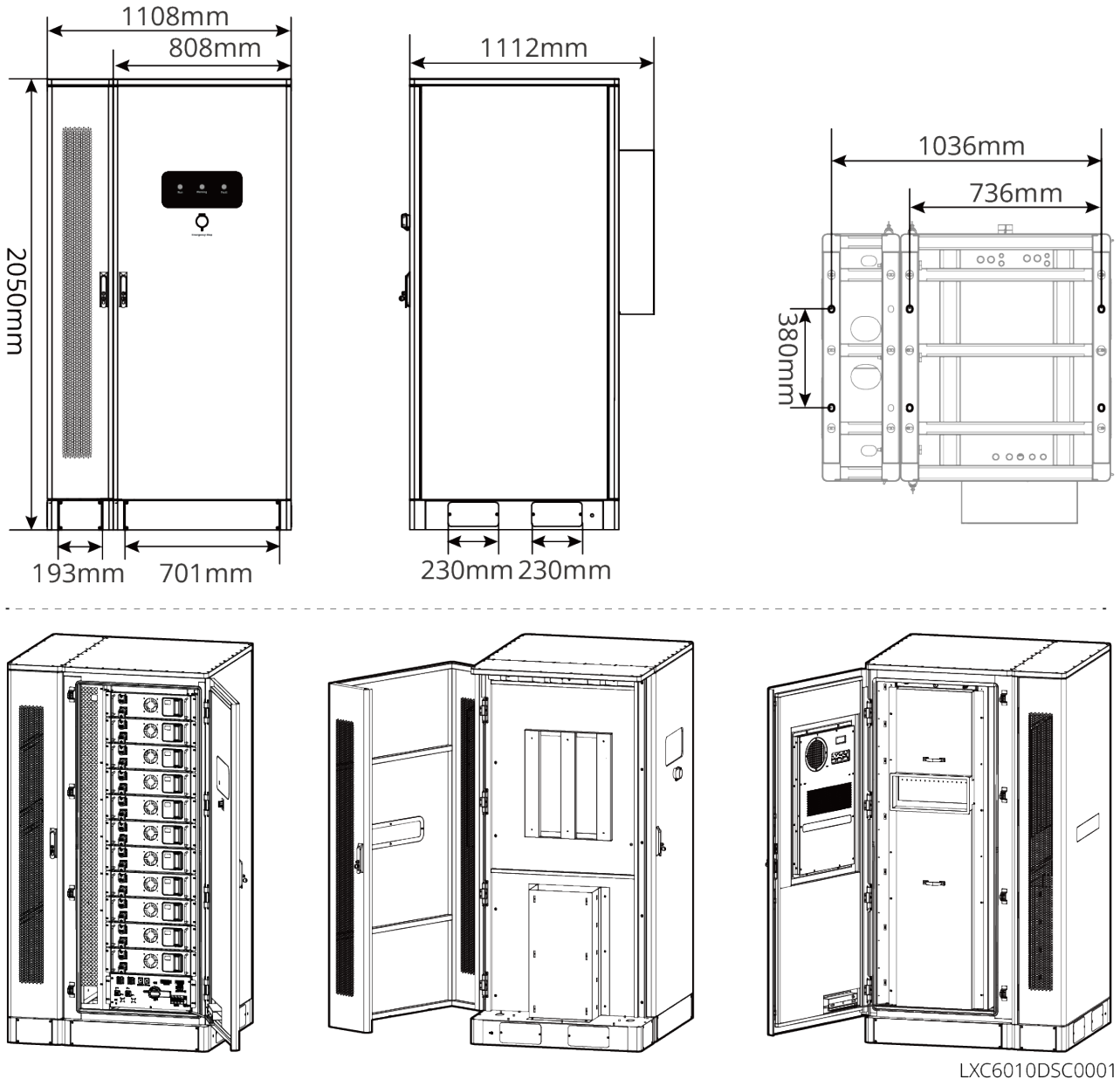

4.2.2.2 BAT-S Series 15.3–56.3 Kwh High-Voltage Battery

No.	Model	PACK Quantity	Rated Energy (kWh)
1	GW15.3-BAT-I-G10	3	15.3
2	GW20.4-BAT-I-G10	4	20.4
3	GW25.6-BAT-I-G10	5	25.6
4	GW30.7-BAT-I-G10	6	30.7
5	GW35.8-BAT-I-G10	7	35.8
6	GW40.9-BAT-I-G10	8	40.9
7	GW46.0-BAT-I-G10	9	46.0
8	GW51.2-BAT-I-G10	10	51.2
9	GW56.3-BAT-I-G10	11	56.3

Dimensions

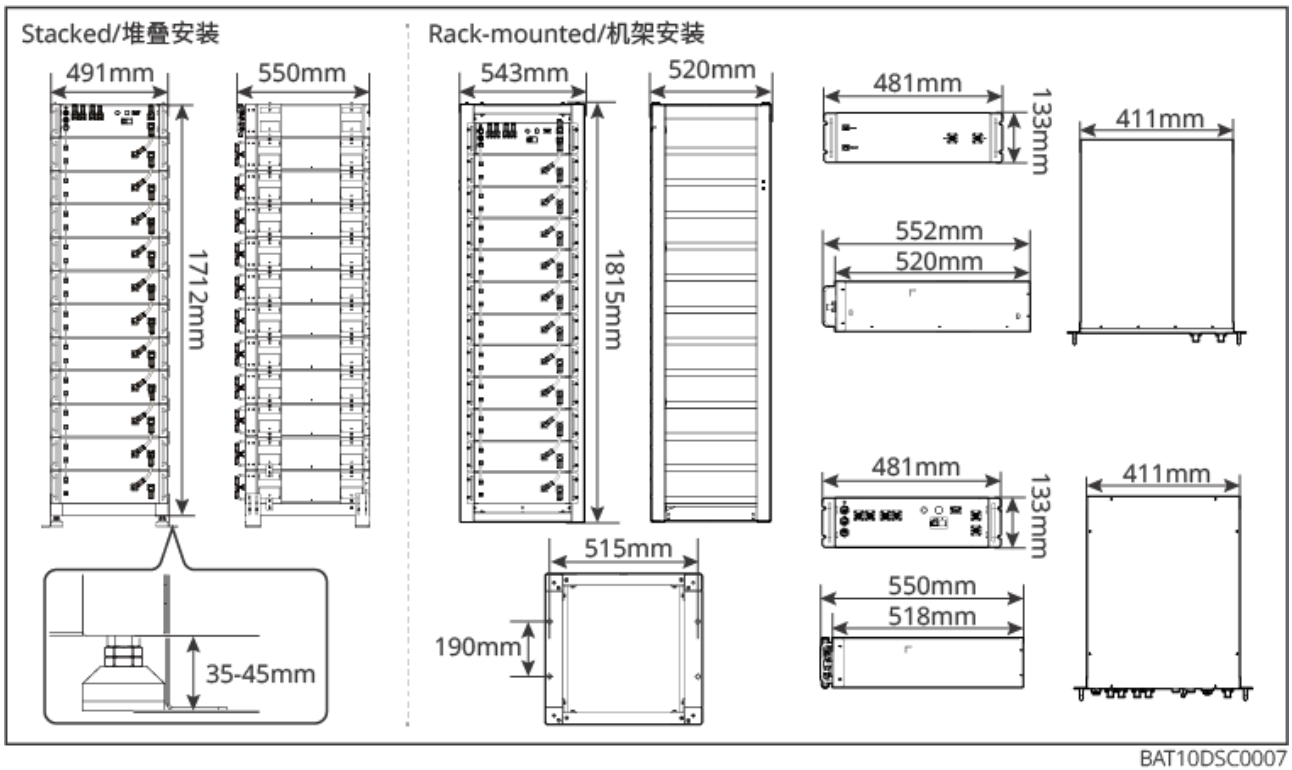

Component Introduction

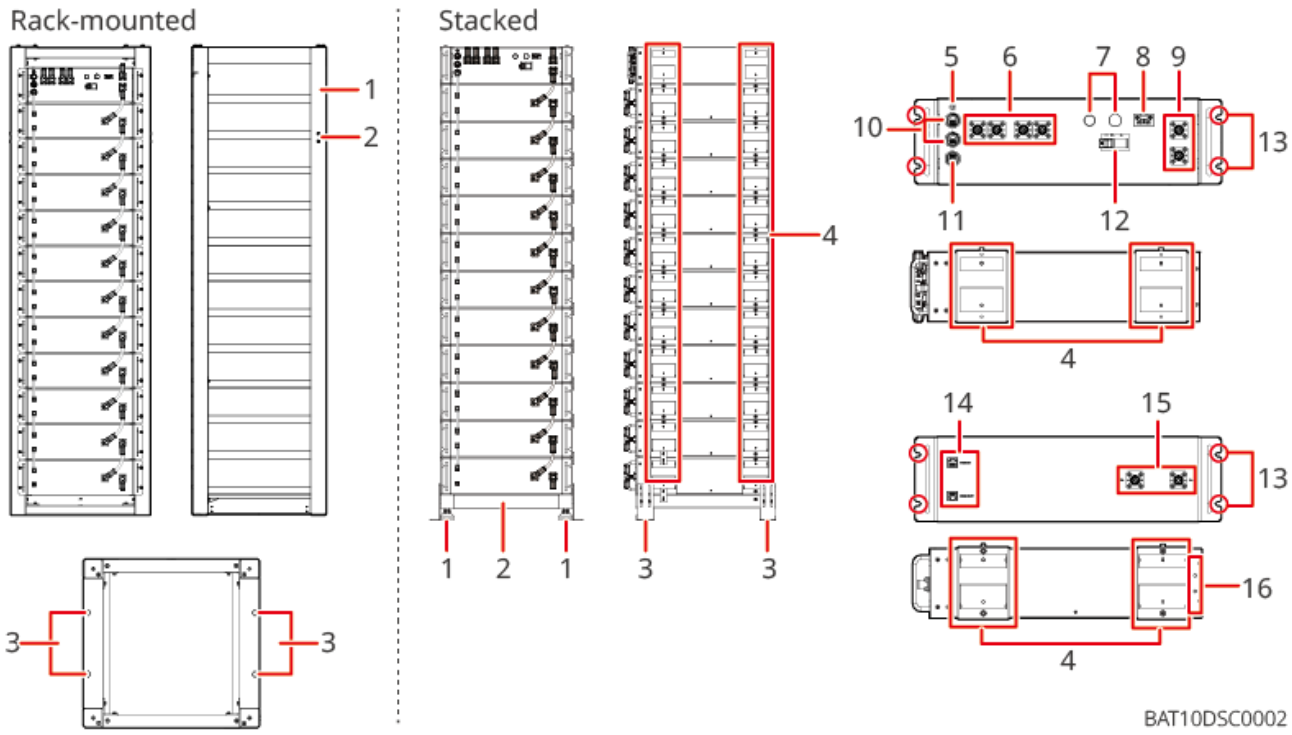

No.		Name	Description
Stacked Installation	1	Adjustable feet	Height adjustable to keep the base level
	2	Base	The battery system is stacked on the base
	3	Ground anchoring bracket	Used to secure the base to the ground and prevent tipping
	4	Stacking bracket	Secured to the battery PACK for stacked battery installation
Rack mounting	1	Battery rack	Used for installing the battery system
	2	Wall anchoring bracket mounting hole	Used to secure the battery rack to the wall and prevent tipping

No.		Name	Description
	3	Ground anchoring bracket mounting hole	Used to secure the battery rack to the ground and prevent tipping
5		Protection grounding point	Used to connect the grounding conductor
6		High-voltage box power input/output port 1	Power cable connecting the high-voltage box and inverter
7		Battery Indicator	Used to indicate battery system status
8		Dry contact	Contact for external fire protection system activation (under normal conditions, the dry contact remains normally open; after detecting dry contact closure, the battery system automatically powers off)
9		High-voltage box power input/output port 2	Power cable connecting the high-voltage box and battery module
10		External communication port	Communication with inverter / terminating resistor placement / battery system parallel cluster communication
11		High-voltage box communication port	For communication with battery modules
12		Battery system switch	Controls start/stop of the battery system
13		High-voltage box/battery PACK mounting hole	Used to secure the high-voltage box/battery PACK to the battery rack

No.	Name	Description
14	Battery module communication port	Used for communication between adjacent battery PACKs and between battery PACKs and the high-voltage box
15	Battery module power input/output port	Power cable connecting adjacent battery PACKs
16	Wall-lock bracket mounting hole	Used to install the wall-lock brackets; only the first and last battery PACKs require wall-lock bracket installation.

4.2.2.3 BAT Series 61.4-112.6 Kwh Commercial and Industrial Battery System

No.	Model	PACK Quantity	Rated Energy (kWh)
1	GW61.4-BAT-AC-G10	6	61.4
2	GW92.1-BAT-AC-G10	9	92.1
3	GW102.4-BAT-AC-G10	10	102.4
4	GW112.6-BAT-AC-G10	11	112.6

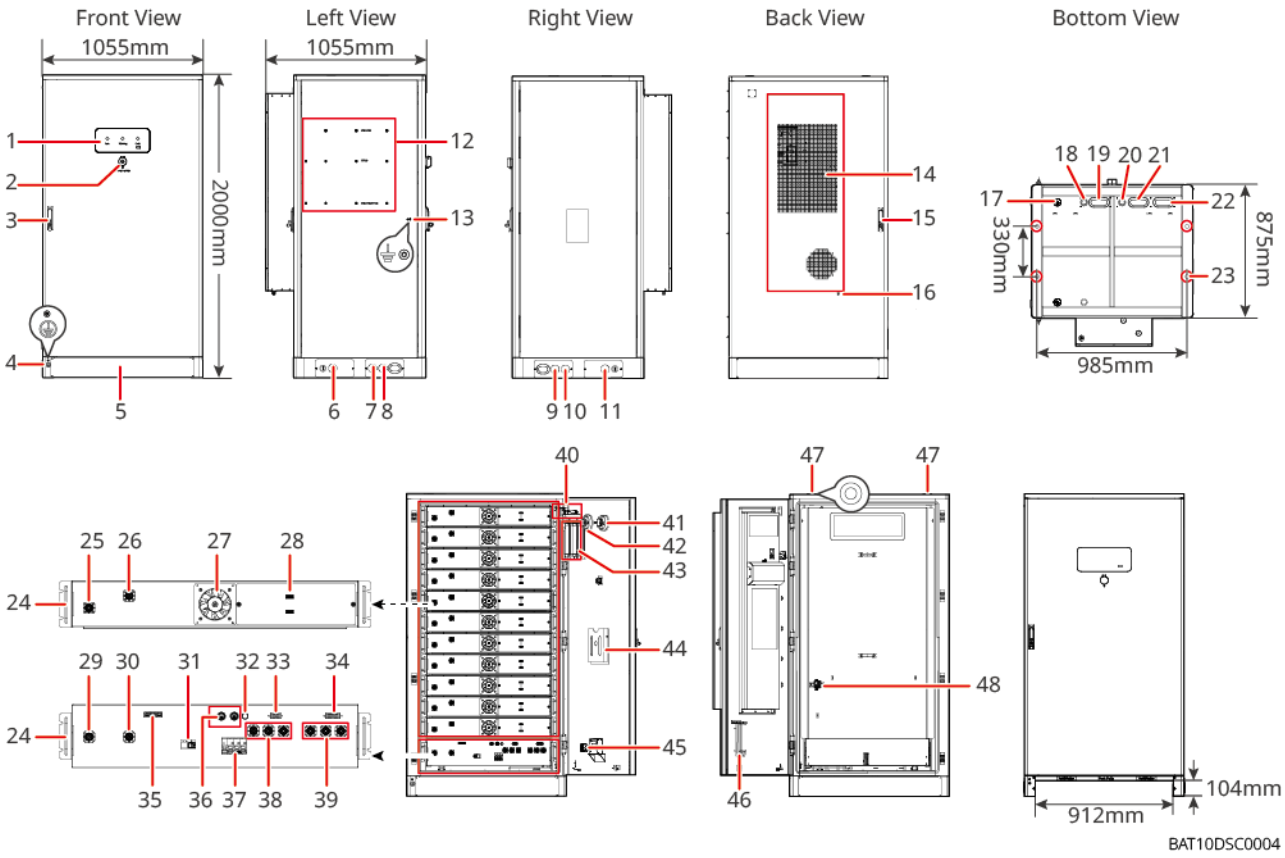

No.	Name	Description
1	LED Indicator	-
2	EPO Button	Pressing the EPO button will power off the battery system
3	Front Door Lock	-
4	PE Port 1	Connect the battery ground cable
5	Bottom Baffle	-
6	Left Cable Entry Hole 1	Air Conditioner Power Cable & ET100 Power Cable
7	Left Cable Entry Hole 2	Inverter communication cable
8	Left cable entry hole 3	Inverter power cable
9	Right cable entry hole 1	Battery parallel-cluster power cable

No.	Name	Description
10	Right cable entry hole 2	Battery parallel cluster communication cable
11	Right cable entry hole 3	Air conditioner power cable
12	Back mounting plate mounting hole	Inverter back mounting plate mounting hole positions
13	PE port 2	Connect the inverter grounding cable
14	Air conditioner	Responsible for temperature control; the air conditioner refrigerant model is R134A
15	Rear door lock	-
16	Air conditioner drain pipe installation port	-
17	Explosion-proof valve	Responsible for explosion protection, pressure relief, and other functions. When abnormal pressure rises inside the battery system, the explosion-proof check valve vent is opened to quickly and directionally release internal gas, thereby preventing the battery system from exploding.
18	Communication cable inlet/outlet (bottom)	Communication cable inlet/outlet between battery and inverter
19	Power cable inlet/outlet (bottom)	Power cable inlet/outlet between battery and inverter
20	Battery communication cable inlet/outlet	Battery parallel cluster communication cable inlet/outlet
21	Battery power cable inlet/outlet (positive)	Battery parallel cluster power cable inlet/outlet (positive)
22	Battery power cable inlet/outlet (negative)	Battery parallel cluster power cable inlet/outlet (negative)

No.	Name	Description
23	Foundation fixing holes	Fasten the battery system and foundation together through these holes
24	Handle	-
25	Battery PACK power input/output port positive terminal	-
26	Battery PACK power input/output port negative terminal	-
27	Fan	-
28	Battery PACK communication port	Communication between adjacent battery PACKs, communication with the high-voltage box, and fan power supply
29	High-voltage box power input/output port negative terminal 1	Power cable connecting the high-voltage box and battery PACK
30	High-voltage box power input/output port positive terminal 1	
31	Molded case circuit breaker	Controls the high-voltage output of the battery system
32	Black start button	Controls black start of the battery system
33	Internal communication port 1	Port 1 for communication with battery PACKs and battery PACK fan power supply
34	Internal communication port 2	Communication port for air conditioning, access control identification, EPO, and fire protection signals

No.	Name	Description
35	LAN communication port	Battery-to-battery LAN communication, used to transmit cell-level information (only supported on machines shipped after October 2025)
36	External communication port 1	Communication with inverter / terminating resistor placement / battery system parallel cluster communication
37	Air switch	Controls the low-voltage power supply of the battery system
38	High-voltage box power input/output port positive terminal 2	Power cable connecting the high-voltage box and inverter
39	High-voltage box power input/output port negative terminal 2	Power cable connecting the high-voltage box and inverter
40	Access control switch	Automatically disconnects when the door is opened, ensuring the energy storage system is de-energized
41	Heat detector	The heat detector monitors temperature through a dual thermistor network and outputs a voltage proportional to the external ambient temperature. One thermistor is exposed to ensure good thermal contact with the surrounding air, while the other thermistor is thermally insulated; when an abnormality is detected, it emits red light to alert operators. • Suitable for environments with dust or smoke under normal conditions • Wide operating Voltage Range

No.	Name	Description
42	Smoke detector	The smoke detector uses the light-scattering principle to detect smoke entering the inner cavity of the detector housing. • Responds well to slow-burning and smoldering fires • Not affected by wind or atmospheric pressure • Some models are equipped with a flashing LED and a magnetically controlled test switch • Alarm indicator: a red light-emitting diode (LED) emits red light.
43	Aerosol fire suppression device	Monitors fire signals inside the cabinet and activates fire suppression. When a fire occurs, the aerosol fire suppression device ignites the heat-sensitive wire after receiving an electrical start signal or open flame. The heat-sensitive wire of the electric igniter burns and activates the aerosol generator in the fire suppression device. The heat released by the aerosol generator through a series of reactions decomposes the chemical coolant, so that the aerosol generator and coolant combine to extinguish the fire.
44	Document storage rack	-
45	Fire-fighting actuation signal port	Dry contact signal interface, normally NC (normally closed). Voltage: 0-24 Vdc, current: 0.3 A. Connects to the audible and visual alarm cable.

No.	Name	Description
46	Maintenance hook holder	When removing the Pack and PCU, the maintenance hook can be taken out from here for operation.
47	Lifting ring mounting hole	-
48	Air conditioner switch	Connects the air conditioner power cable and controls the power supply to the air conditioner.

Fire Protection System Description

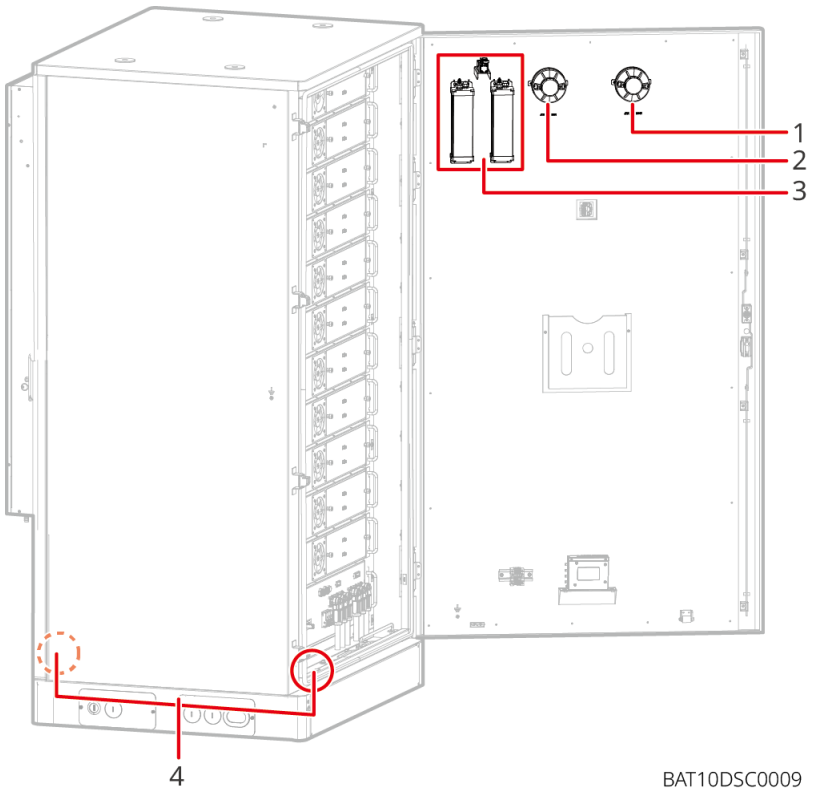

1	2	3	4
Smoke detector	Heat detector	Aerosol fire suppression device	Explosion-proof valve

- **Heat detector & smoke detector**

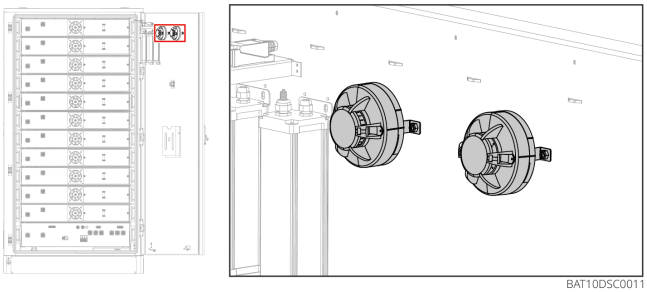

Temperature detection principle: The detector uses a negative temperature coefficient (NTC) thermistor as the sensor and obtains ambient temperature information based on the thermistor's sensitivity to ambient temperature. The internal circuit converts this information into a voltage signal and transmits it to the microcontroller. The microcontroller analyzes and processes the signal through a built-in intelligent algorithm and simultaneously determines whether it is currently in a fire alarm or fault state.
Smoke detection principle: The detector uses the infrared scattering principle to detect fire. In a smoke-free state, it receives only very weak infrared light. When smoke particles enter the optical smoke detection chamber, scattering enhances the received optical signal. When the smoke concentration reaches a certain level, an alarm signal can be output.

Technical specifications	Heat detector	Smoke detector
Dimensions (mm)	102 × 55	
Installation Requirements	Screw mounting	
Indicator light (red)	Flashes during monitoring and stays on during alarm	
Operating temperature (°C)	-40~+85	
Relative Humidity	≤95%RH (non-condensing)	

- **Explosion-proof valve**

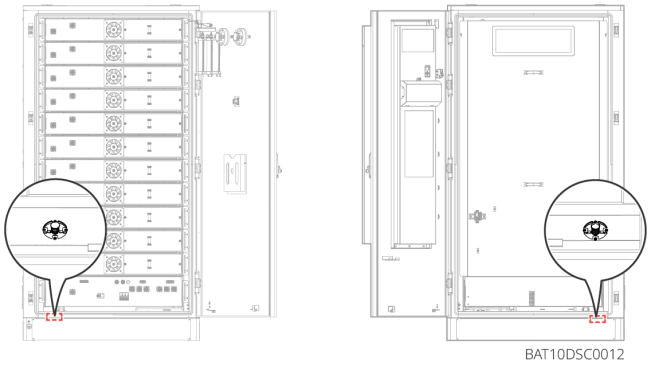

When the internal pressure of sealed products such as enclosures rises rapidly, the explosion-proof check valve exhaust port opens to quickly and directionally release the internal gas, thereby preventing explosions in sealed products such as battery enclosures.

Technical specifications	Explosion vent valve
Ingress Protection Rating	IP68
Opening area	570 mm^2
Operating temperature	-40℃ ~ +130℃
Flame retardant performance	UL94-V0

- **Aerosol fire suppression device**

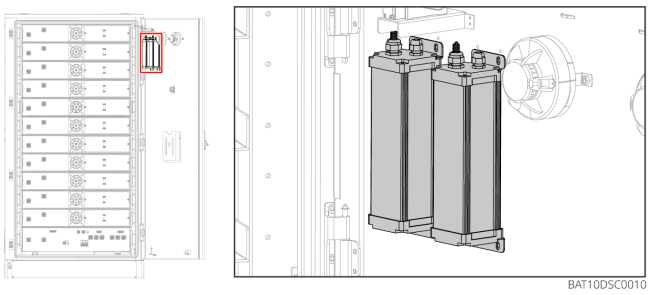

When a fire occurs, after the fire-extinguishing device receives an electrical activation signal or an open flame ignites the heat-sensitive wire, the electric initiator or the burning heat-sensitive wire activates the aerosol-generating agent in the fire-extinguishing device. The heat released by the aerosol-generating agent through the redox reaction decomposes the chemical coolant, enabling the aerosol-generating

agent and the coolant to jointly participate in fire extinguishing.

Technical specifications	Aerosol fire suppression device
Operating ambient temperature range	-30℃ ~ +70℃
Operating ambient Relative Humidity	≤95%RH
Thermal activation temperature	185±10℃

Fire Protection Logic

The fire protection of this battery system adopts a tiered response design. When a fire occurs inside the battery Pack, the Pack-level detector first detects it and immediately activates the aerosol fire protection device inside the Pack for initial suppression. If the fire is not controlled and further spreads, cabinet-level fire protection will be triggered. When the smoke detector and temperature detector simultaneously detect a fire or an open flame ignites the heat-sensitive wire (temperature reaches 180°C), the cabinet-level aerosol fire-extinguishing device is automatically activated for comprehensive fire extinguishing. The aerosol-generating agent produces an extinguishing agent through a combustion reaction, and the heat released during the reaction decomposes the chemical coolant; the aerosol extinguishing agent and coolant exert a synergistic effect to extinguish the fire. At the same time, the BMS receives feedback signals from the fire protection system and triggers the external audible and visual alarm device until the fire is completely extinguished.

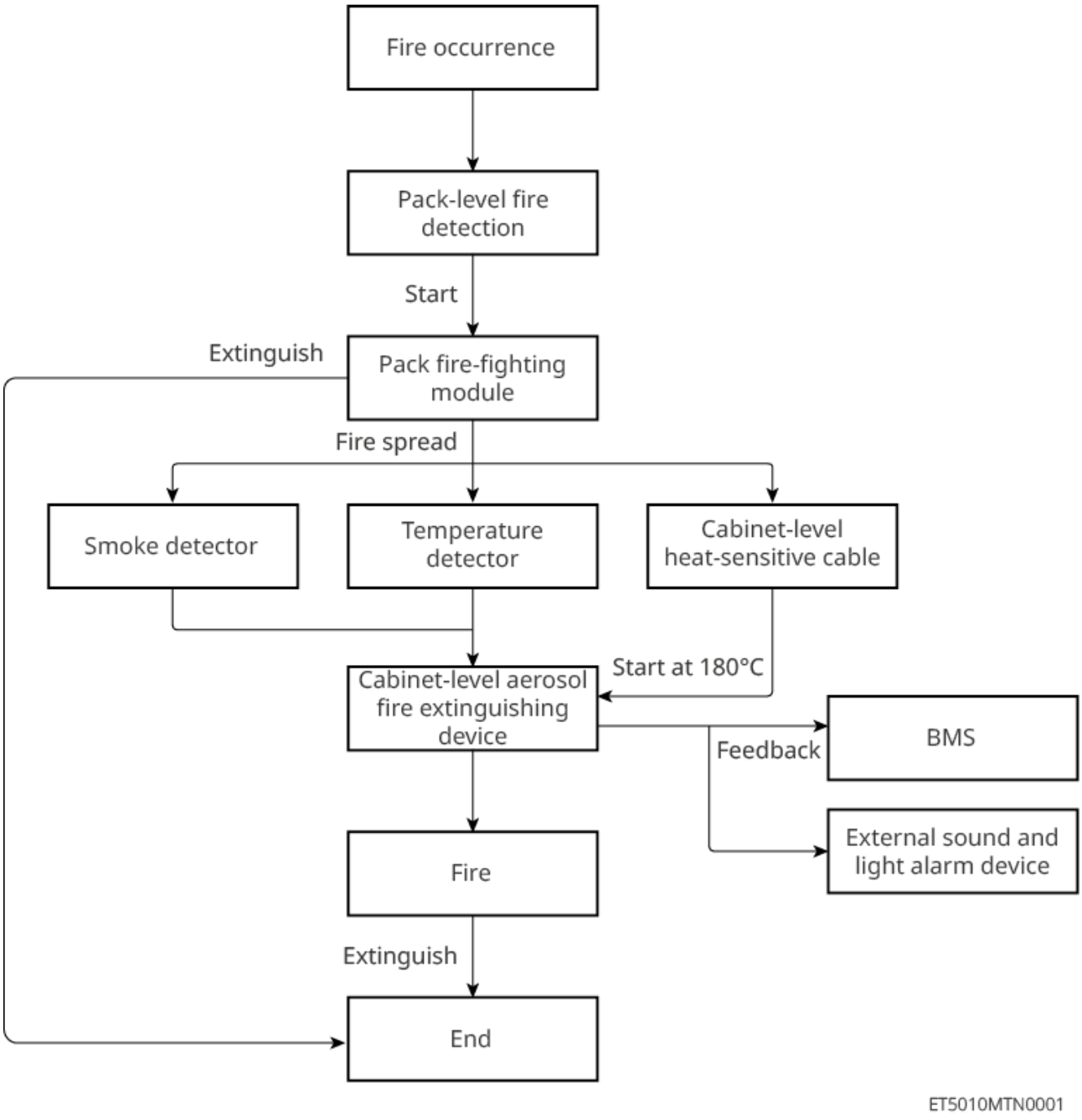

4.2.3 Smart Meter

The smart meter can measure parameters such as grid voltage, current, power, frequency, and energy, and transmit the information to the inverter to control the input and output power of the energy storage system.

GM3000&CT

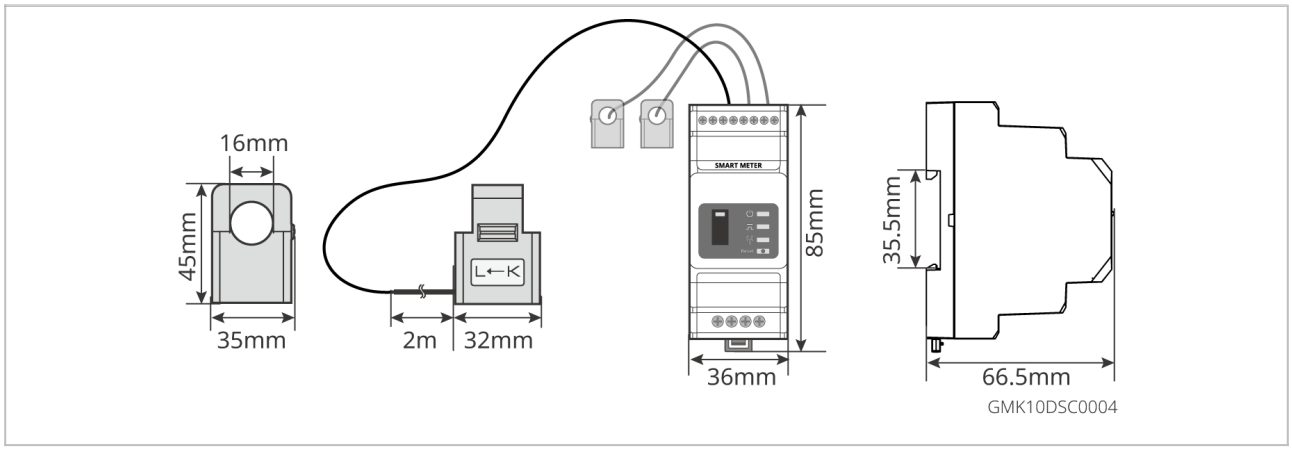

GM330&GMK330&CT

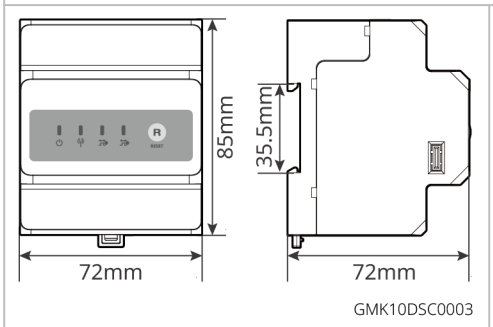

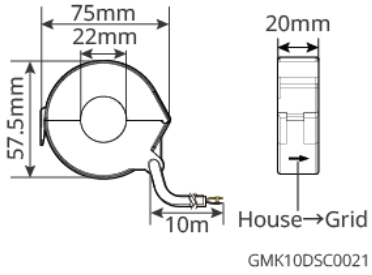

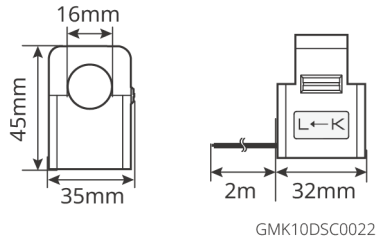

No.	Model	Applicable scenarios
1	GM3000	CT not replaceable,CT ratio:120A: 40mA
2	GM330	CT Can be purchased from GoodWe or purchased independently,CT ratio requirement:nA: 5A • nA: CT primary-side input current,n range is 200-5000 • 5A: CT secondary-side output current
3	GMK330	CT shipped with the meter,CT ratio: • 120A: 40mA • 200A: 50mA(Brazil only)

4.2.4 Smart Communication Stick

The Smart Communication Stick is mainly used to transmit various power generation data of the inverter in real time to theSEMS Portalremote monitoring platform, and

viaSolarGo APPconnect to the Smart Communication Stick for near-end device commissioning.

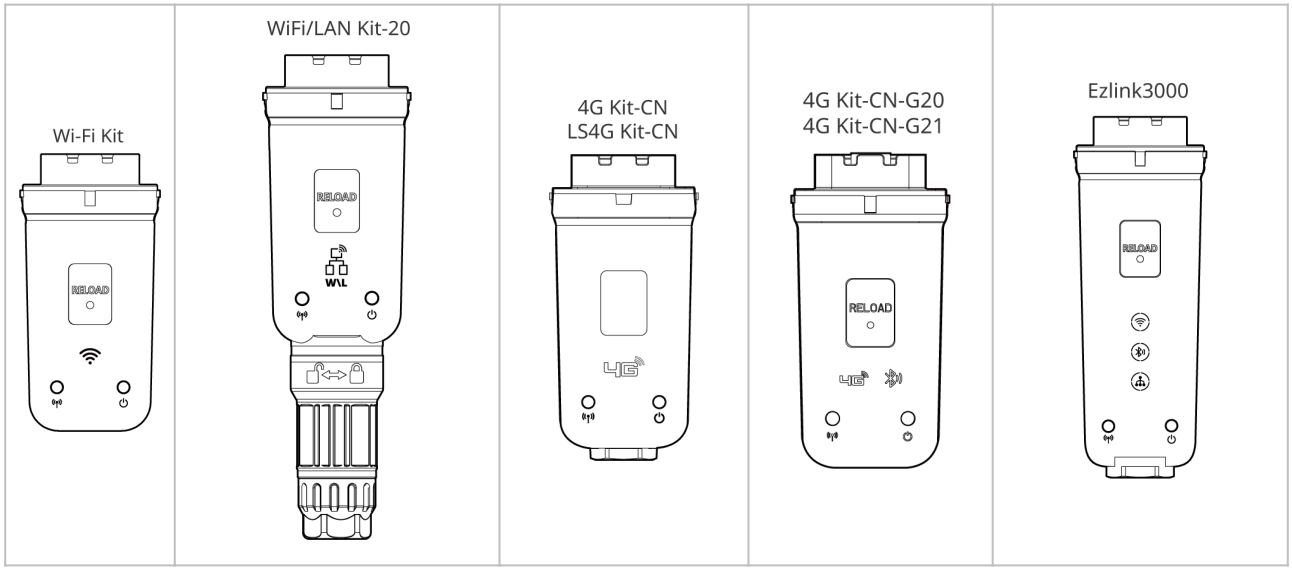

No.	Model	Signal Type	Applicable scenarios
1	Wi-Fi Kit	WiFi	Single-inverter scenario
2	WiFi/LAN Kit-20	WiFi、LAN, Bluetooth	
3	LS4G Kit-CN 4G Kit-CN	4G	
4	4G Kit-CN-G20	4G, Bluetooth	
	4G Kit-CN-G21	4G, Bluetooth,CNSS	
5	Ezlink3000	WiFi、LAN, Bluetooth	Master inverter in a multi-inverter scenario

4.3 Supported Grid Types

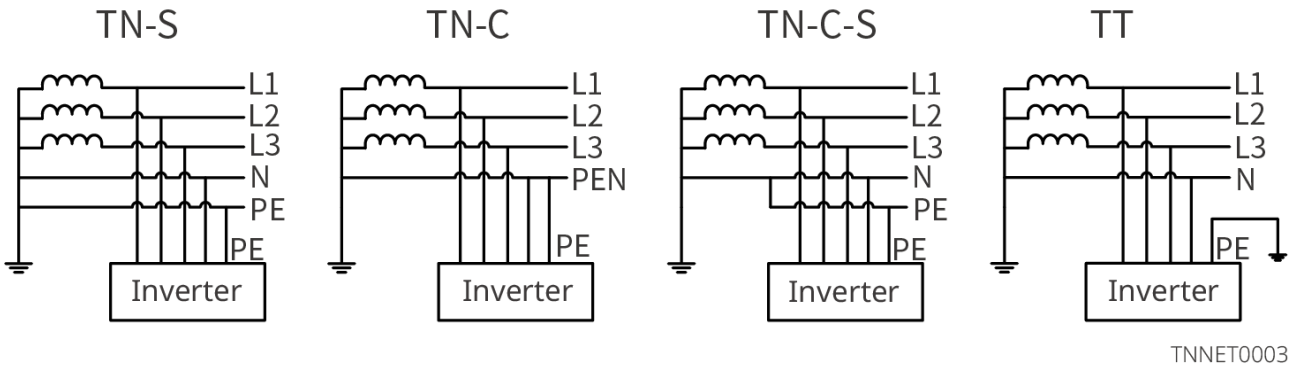

TNNET0003

4.4 System Mode

Self-consumption mode

- Basic mode of system operation.
- PV generation preferentially supplies the load; surplus power charges the battery, and any remaining power is exported to the grid. When PV generation cannot meet the load demand, the battery supplies the load; when the battery charge also cannot meet the load demand, the grid supplies the load.

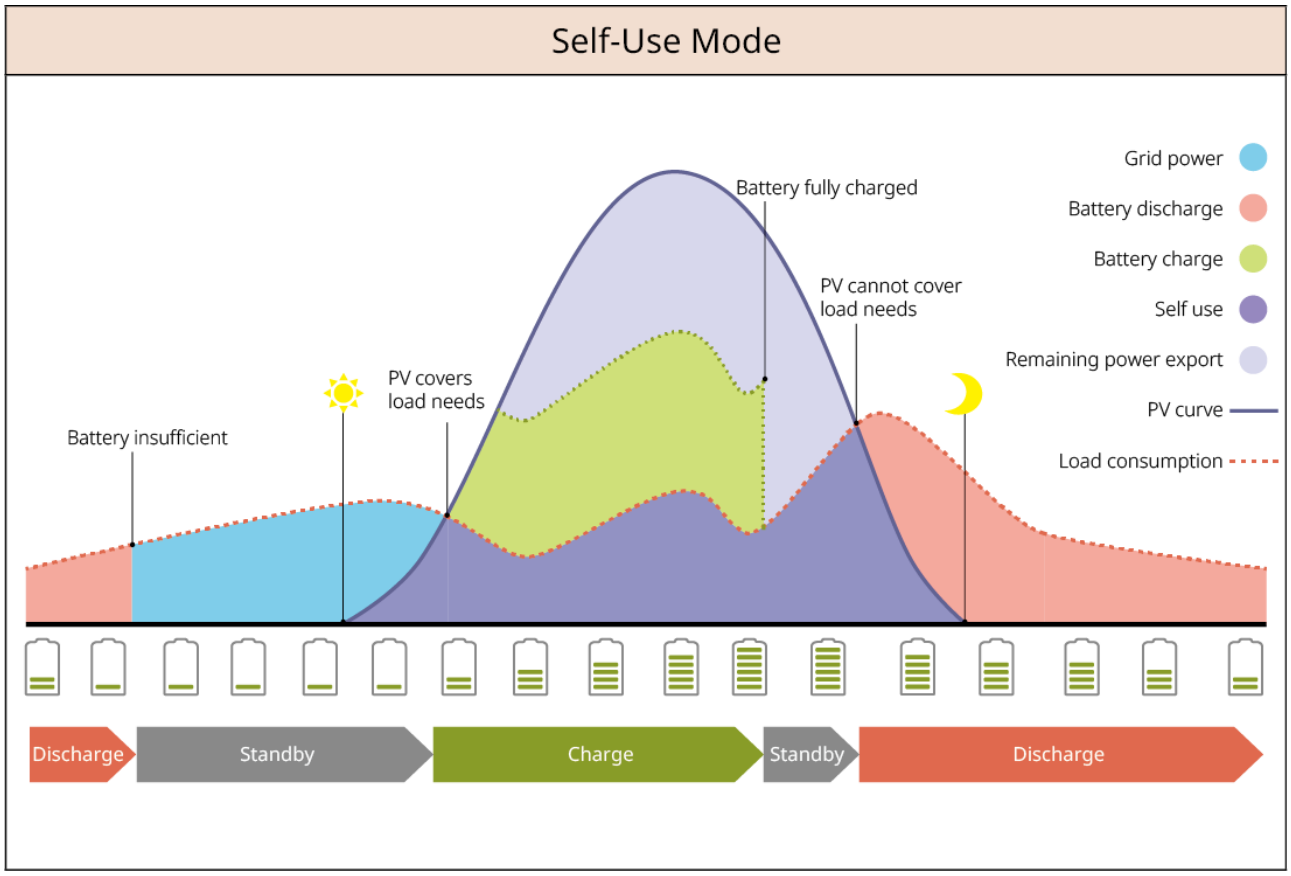

SLG00NET0009

Backup Mode

- Recommended for use in areas with an unstable grid.
- During a Grid Power Outage, the inverter switches to off-grid operating mode, and the battery discharges to supply the load, ensuring the BACK-UP load is not interrupted; when the grid recovers, the inverter switches to grid-connected operation.
- To ensure that the battery SOC is sufficient to maintain normal system operation in

off-grid mode, when the system is operating grid-connected, the battery will be charged to the backup power SOC using PV or grid-purchased electricity. If you need to purchase electricity from the grid to charge the battery, confirm that local grid laws and regulations are met.

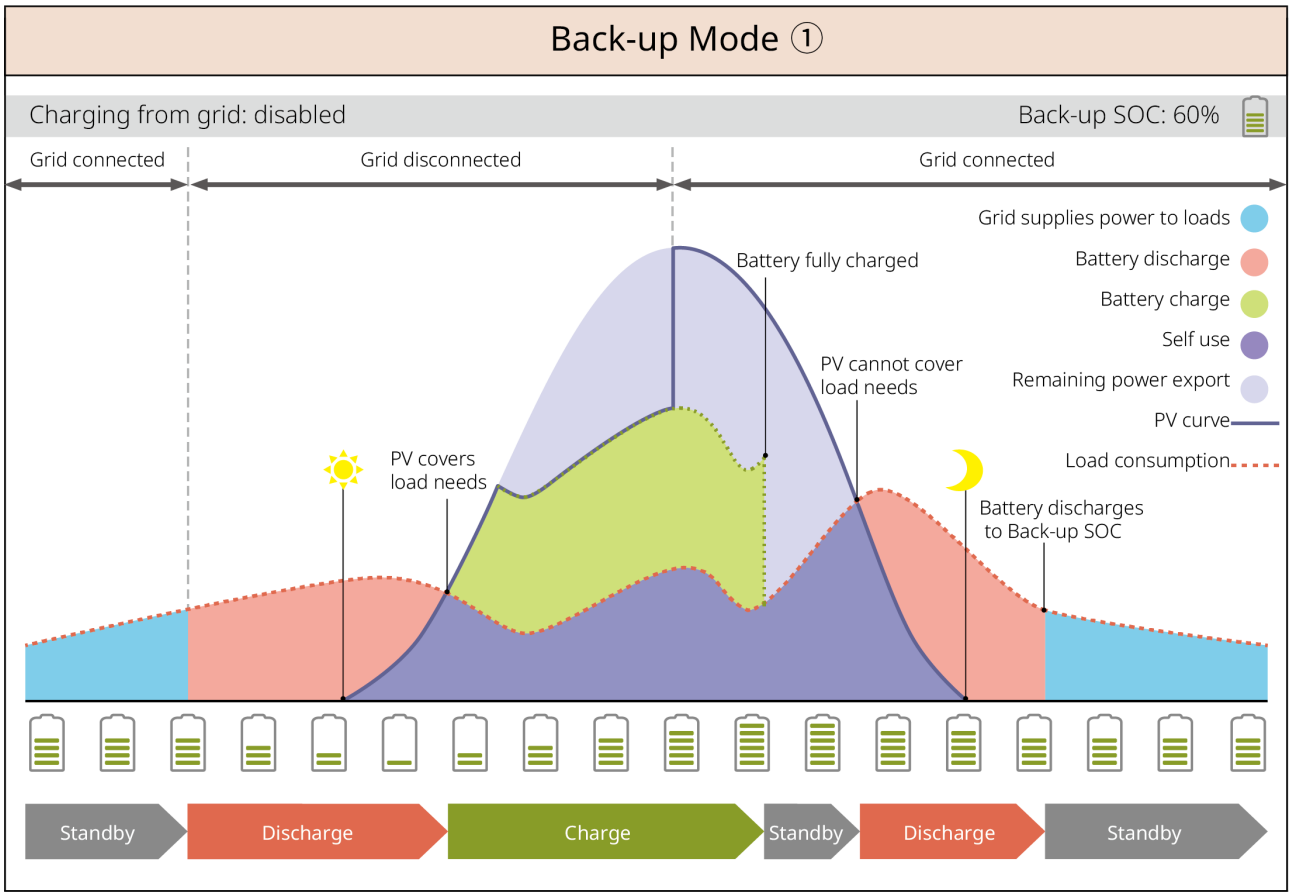

SLG00NET0002

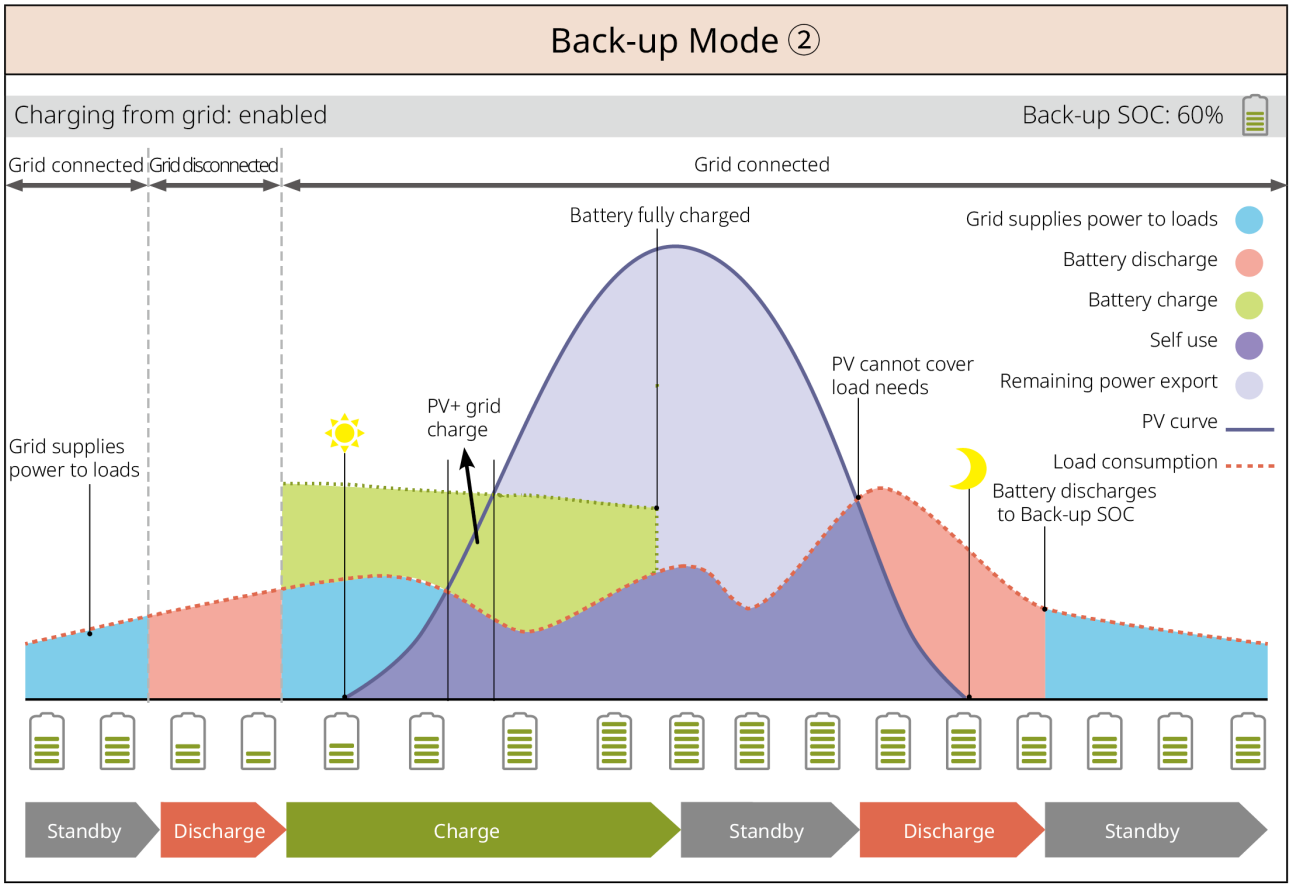

SLG00NET0003

TOU Mode

Where local laws and regulations permit, set different time periods for electricity purchase and Export Energy based on the grid peak-valley Tariff difference.

For example: during the Tariff valley period, set the battery to charging mode to purchase electricity from the grid for charging; during the Tariff peak period, set the battery to discharging mode to supply the load via the battery.

TOU Mode ①

PV: Charge battery in priority

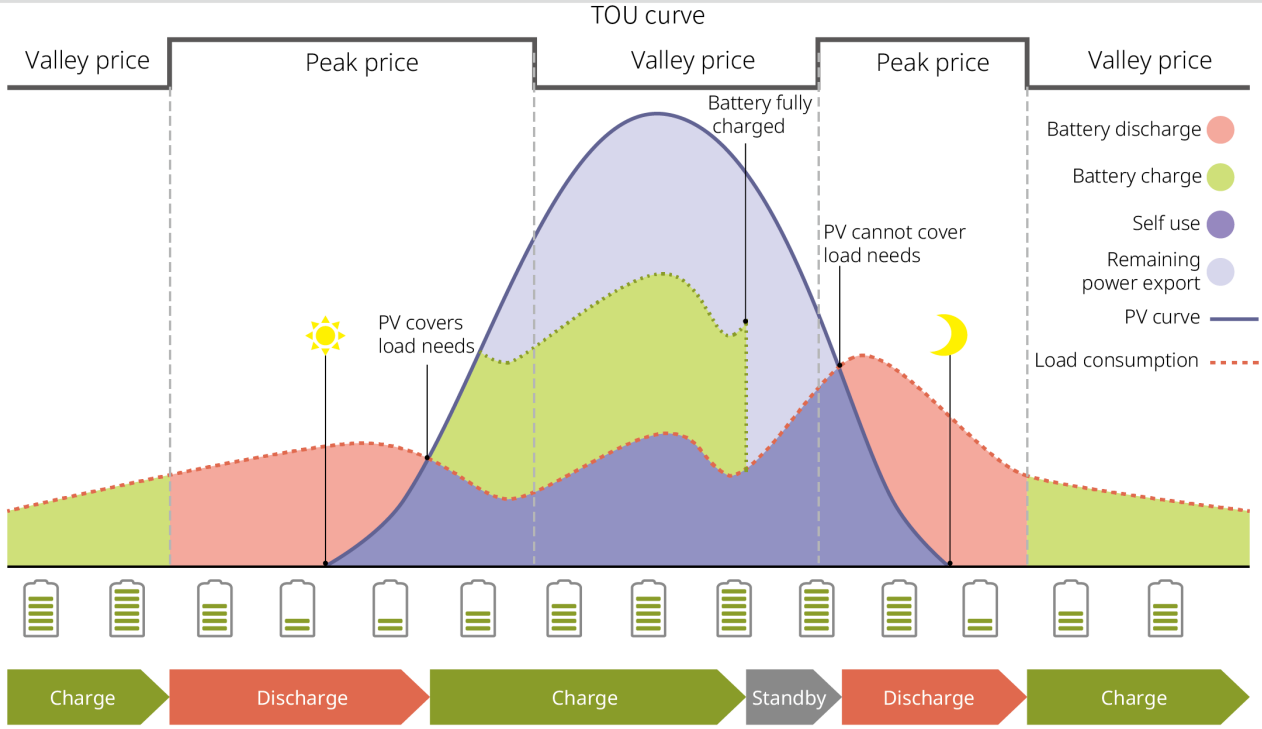

SLG00NET0004

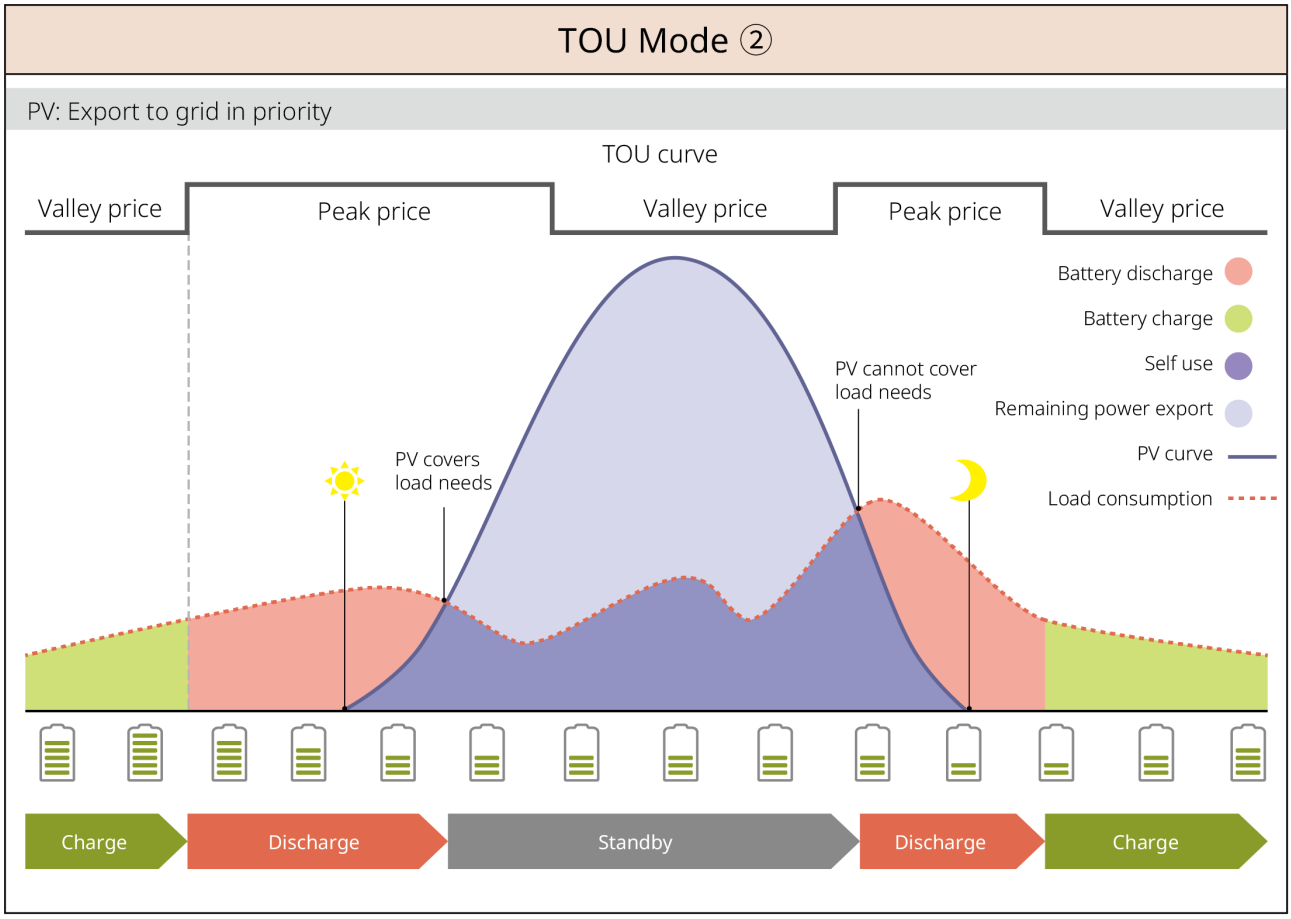

SLG00NET0005

Delayed Charging Mode

- Applicable to areas with grid-connected power output limits.
- Setting a peak power limit allows PV generation exceeding the grid-connection limit to be used to charge the battery; alternatively, set a PV charging time period and use PV generation to charge the battery during that period.

Delayed Charging ①

PV > Peak Limit | Switch to Charge: enabled/disabled

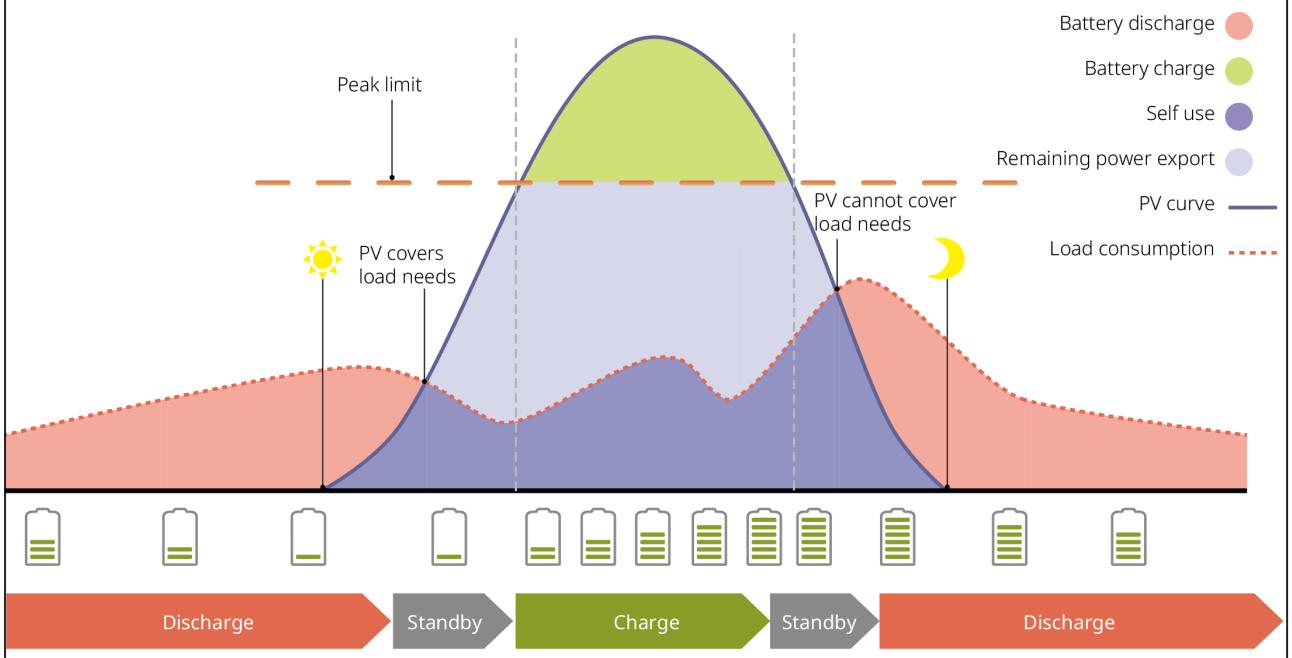

SLG00NET0006

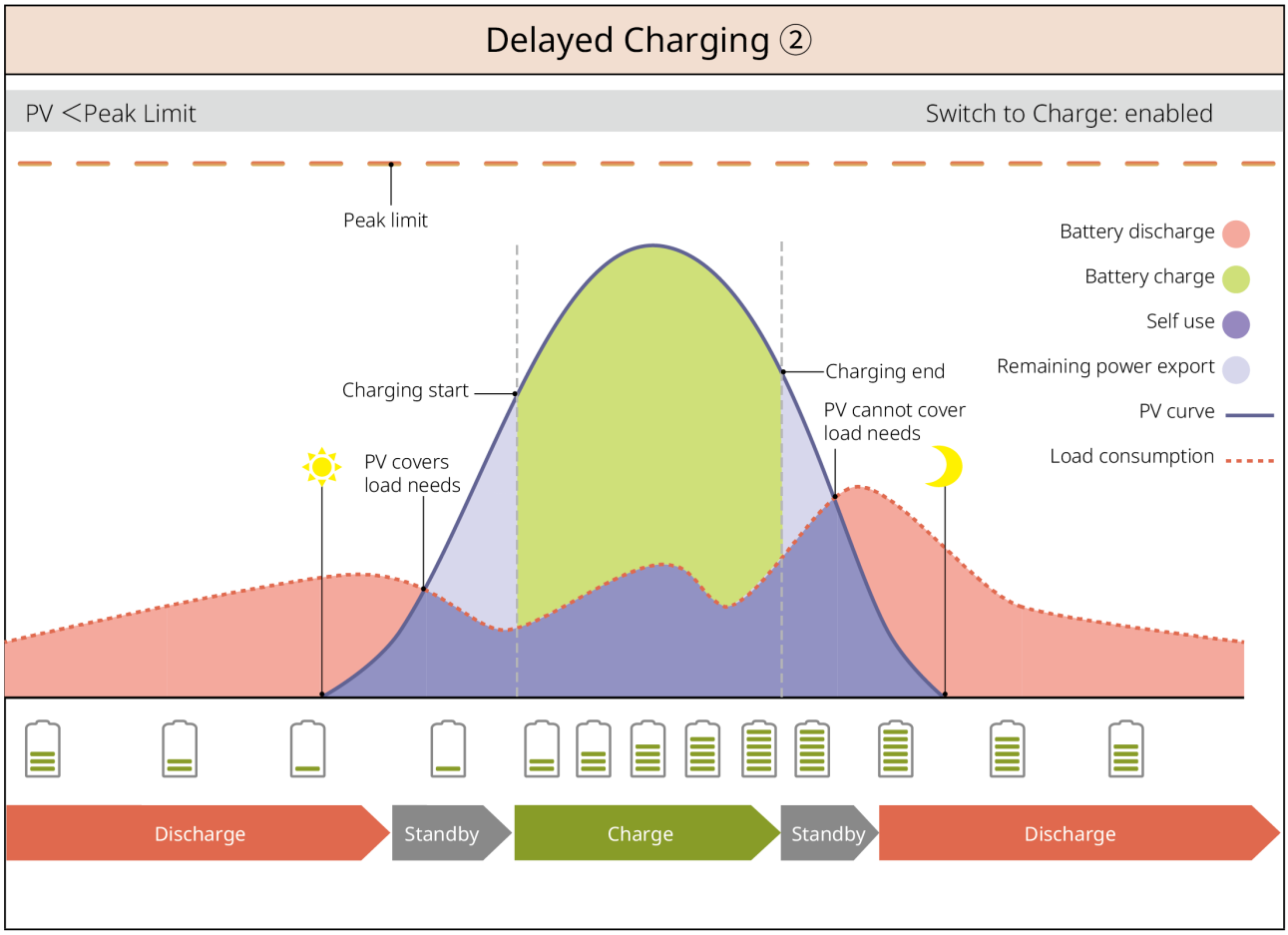

SLG00NET0007

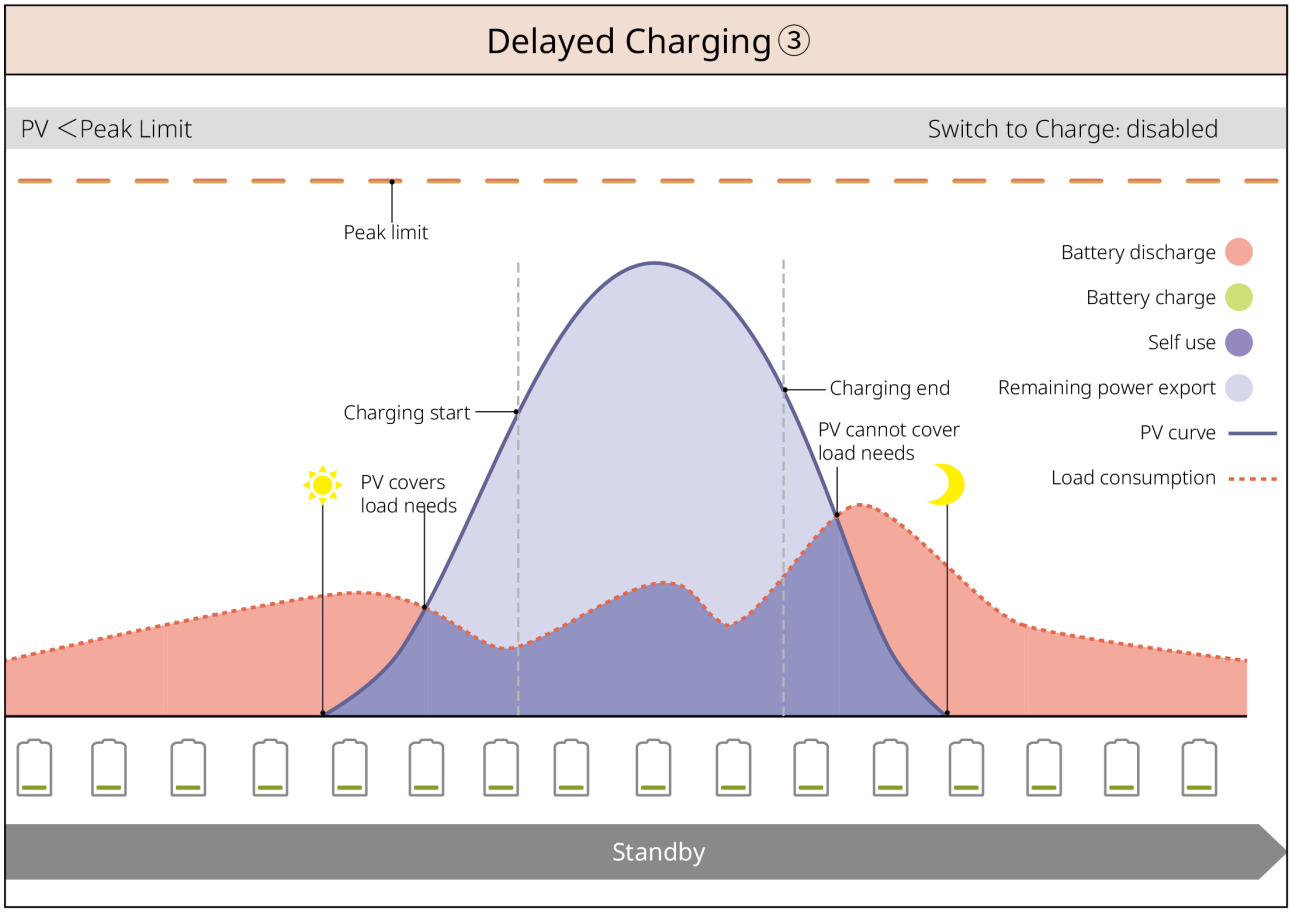

SLG00NET0008

Demand Control Mode

- Mainly applicable to commercial and industrial scenarios.
- When the total load power exceeds the electricity quota within a short time, battery discharge can be used to reduce the electricity consumption exceeding the quota.
- When both battery channels of the inverterSOCare both below the reservedSOCfor demand management, the system purchases electricity from the grid according to the time period, load consumption, and peak import limit; when only one battery channel of the inverterSOCare both below the reservedSOCfor demand management, the system purchases electricity from the grid according to the load consumption and peak import limit.

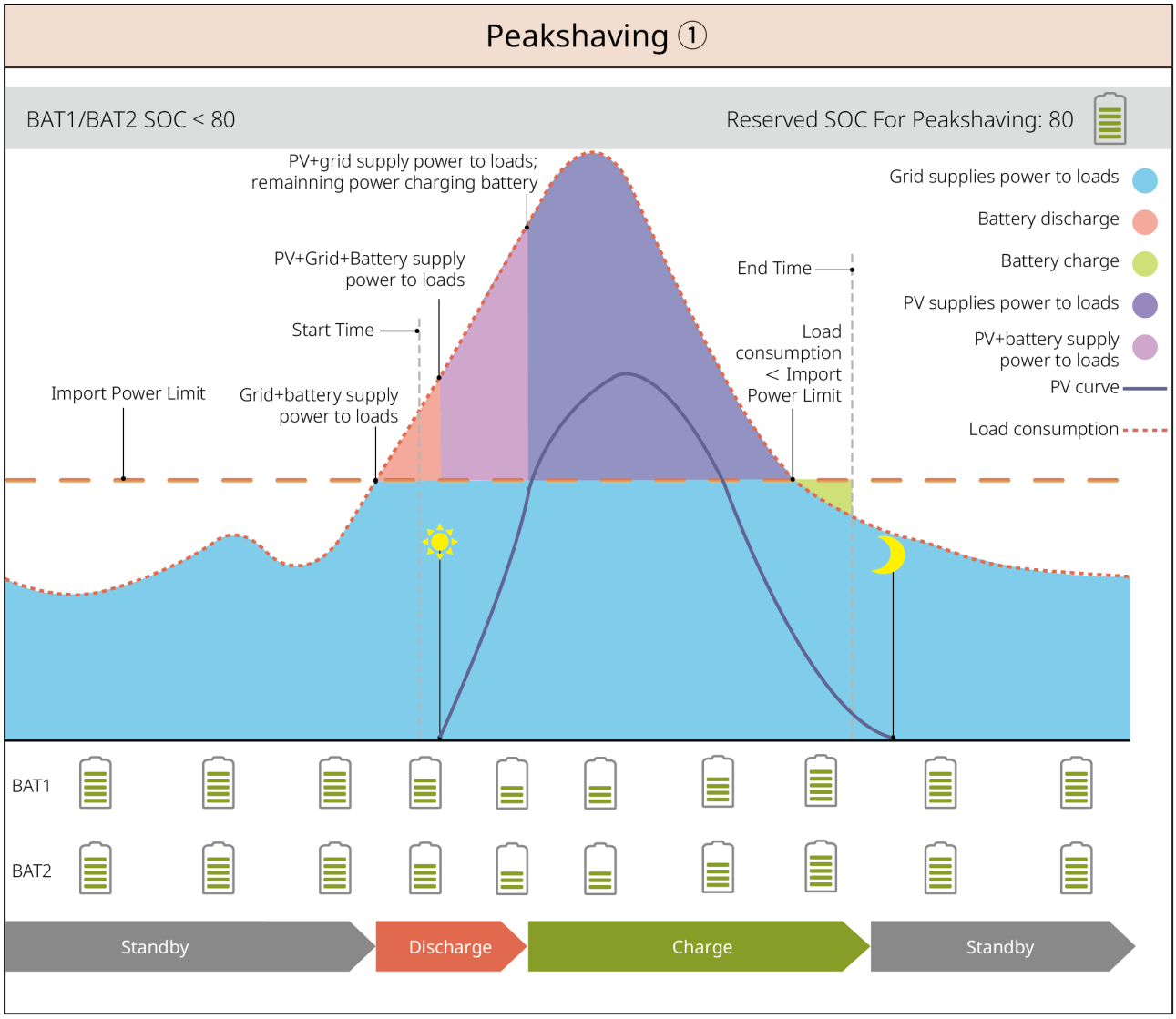

SLG00NET0010

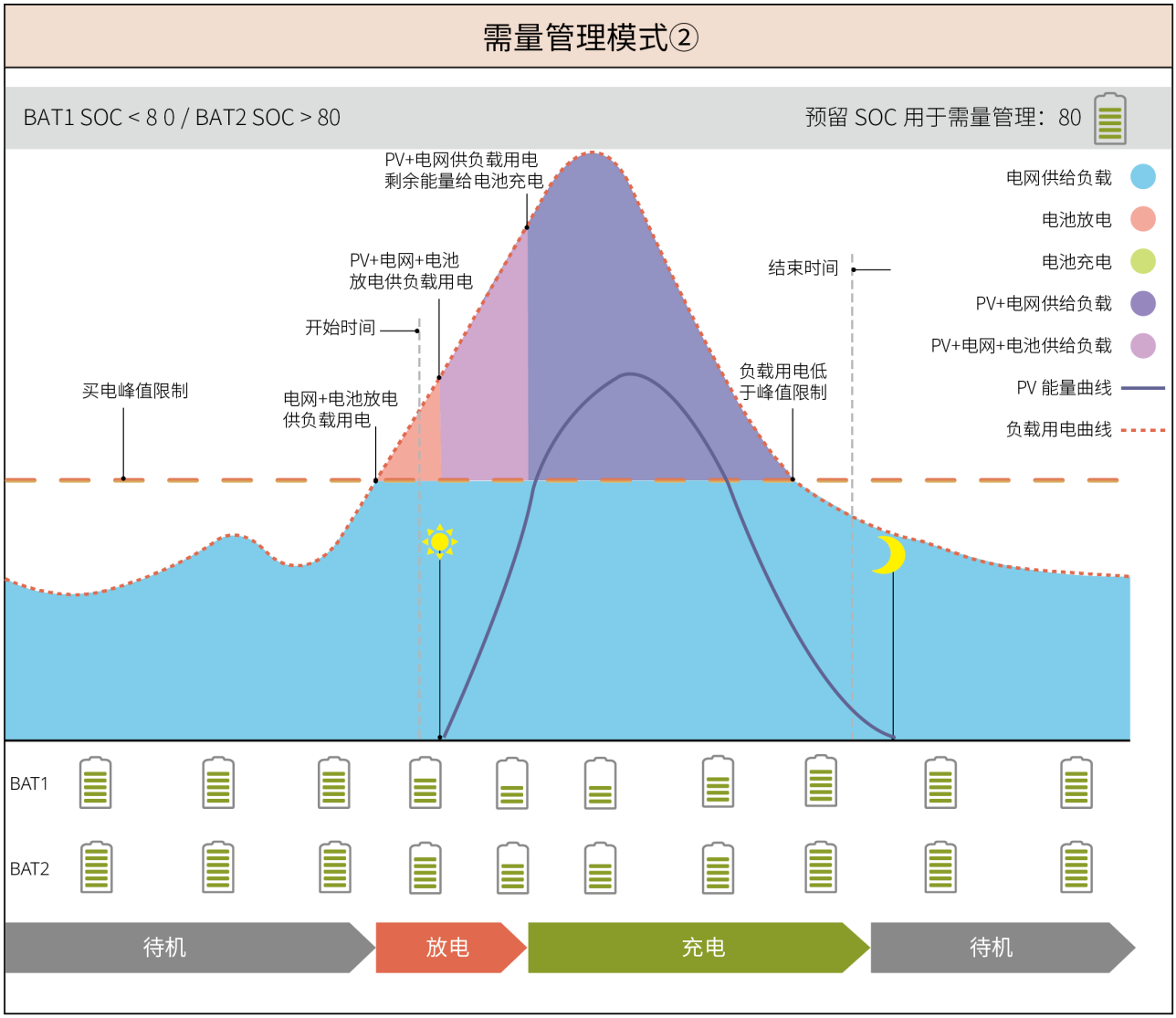

SLG00NET0011

Off-Grid Mode

NOTE

When the battery system is Not Connected to the inverter, do not operate in pure off-grid mode.

During a Grid Power Outage, the inverter switches to off-grid operating mode.

- During the day, PV generation preferentially supplies the load, and surplus power charges the battery.
- At night, the battery discharges to supply the load, ensuring the BACK-UP load is not interrupted.
- Off-grid SOC recovery: after the system operates off-grid, the battery gradually

recovers to the minimum SOC through PV generation or other generation methods.

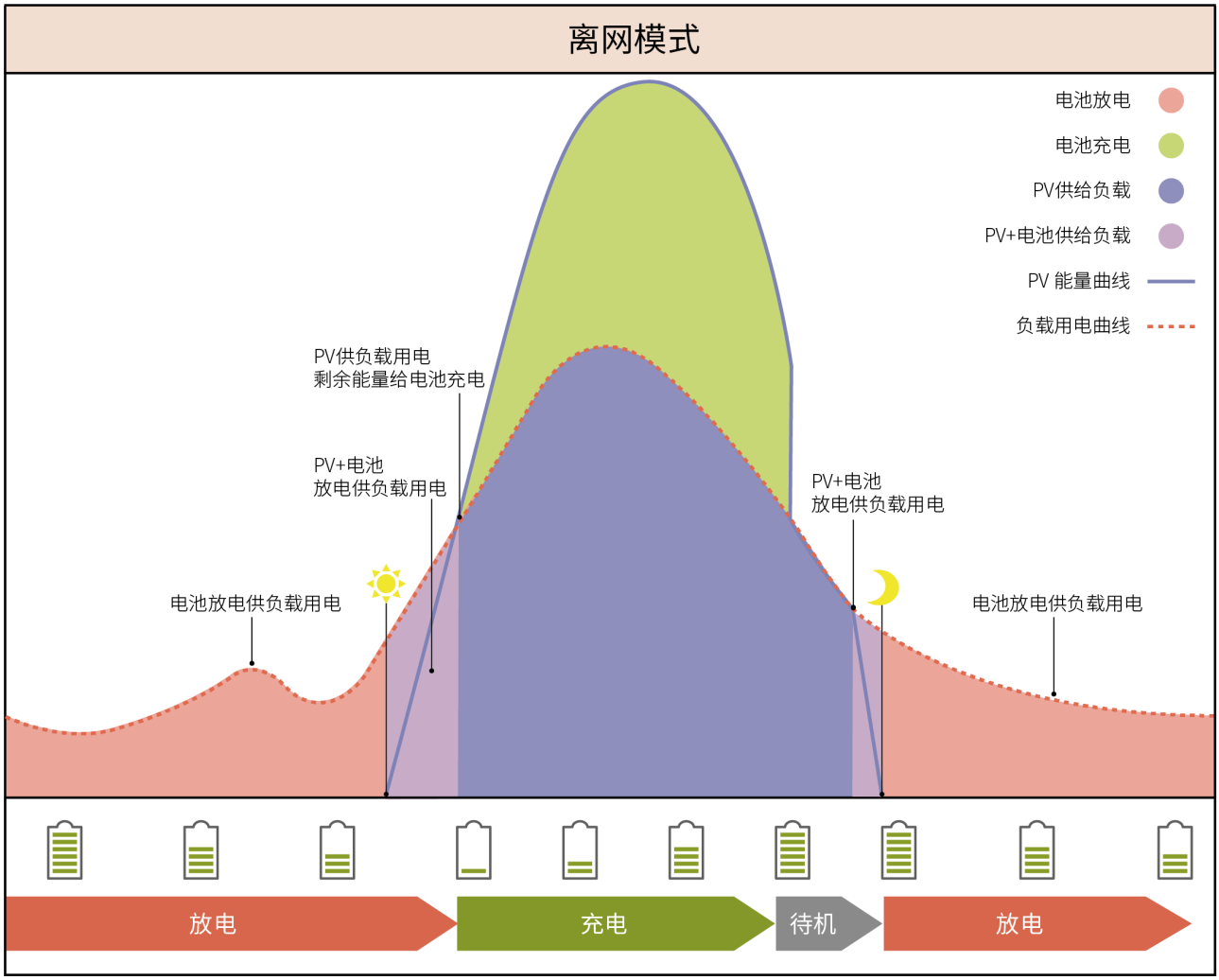

SLG00NET0012

4.5 Functional Features

NOTE
For specific functional features, refer to the actual product configuration.

AFCI

The inverter integrates an AFCI circuit Protection device to detect an Arc Fault (arc fault) and quickly disconnect the circuit upon detection, thereby preventing electrical fires.

Causes of arc generation:

- Connector connections in the PV system are damaged.
- Incorrect or damaged cable connections.
- Aging of connectors and cables.

Arc Detection Methods

- The inverter integratesAFCIfunction and complies with IEC 63027standard.
- When the inverter detects an arc, theAppcan display the fault occurrence time and fault symptoms.
- Inverter triggeredAFCIAfter the alarm is triggered, the inverter will shut down for Protection; after the alarm is cleared, the inverter will automatically reconnect to the grid and resume operation.
  - Automatic reconnection: If, within24hours, the inverter triggersAFCIalarms <5times, the alarm can be automatically cleared after five minutes, and the inverter will reconnect to the grid.

Manual reconnection: If, within24hours, the inverter triggers the5 thAFCIalarm, the alarm must be manually cleared before the inverter can reconnect to the grid.

Model	Label	Description
GW12KL-ET	F-I-AFPE-1-2/2-2	F: Full coverage I: Integrated AFPE: Detection and interruption capability provided 1: 1 monitored string per input port 2/2: 2/2 input ports per channel 2: 2 monitored channels
GW15K-ET		
GW20K-ET		
GW18KL-ET	F-I-AFPE-1-2/4-2	F: Full coverage I: Integrated AFPE: Detection and interruption capability provided 1: 1 monitored string per input port 2/4: 2/4 input ports per channel 2: 2 monitored channels
GW25K-ET		
GW29.9K-ET		
GW30K-ET		

Three-phase unbalanced output

Both the inverter grid-connected terminal and theBACK-UPterminal support three-

phase unbalanced output, and each phase can be connected to loads of different power. The maximum output power per phase for different models is shown in the following table:

No.	Model	Maximum output power per phase
1	GW12KL-ET	4kW
2	GW18KL-ET	6kW
3	GW15K-ET	5kW
4	GW20K-ET	6.7kW
5	GW25K-ET	8.3kW
6	GW29.9K-ET	10kW
7	GW30K-ET	10kW

Load control

The inverter's dry contact control port supports connection of an additional contactor to control load on/off. It supports household loads, heat pumps, etc.
Load control methods are as follows:

- Time control: Set the time to control load on/off; the load will automatically turn on or off within the set time period.
- Switch control: When the control method is set to ON, the load will turn on; when set to OFF, the load will turn off.
- BACK-UP load control: The inverter has a built-in relay dry contact control port, through which the relay can control whether the load is turned off. In off-grid mode, if an Overload at the BACK-UP terminal is detected or the battery SOC is lower than the battery off-grid Protection setting, the load connected to the relay port can be turned off.

Rapid Shutdown (RSD)

In a Rapid Shutdown system, the Rapid Shutdown transmitter and receiver work together to achieve system Rapid Shutdown. The receiver maintains module output by receiving signals from the transmitter. The transmitter can be external or built into the inverter. In an emergency, enabling an external trigger device can stop the transmitter from working, thereby shutting down the modules.

- When the inverter cannot connect to an external synchronization signal and

multiple inverters need to be operated in parallel, ensure that the PV cable routing of different inverters uses independent cable trays, and maintain a spacing of at least 20 cm between the cable trays.

- When the inverter can connect to an external synchronization signal, ensure that a maximum of 5 transmitters are connected in the same synchronization group.

- External transmitter
  - Transmitter models: GTP-F2L-20, GTP-F2M-20
    https://www.goodwe.com/Ftp/Installation-instructions/RSD2.0-transmitter.pdf
  - Receiver models: GR-B1F-20, GR-B2F-20
    https://en.goodwe.com/Ftp/EN/Downloads/User%20Manual/GW_RSD-20_Quick-Installation-Guide-POLY.pdf
- Built-in transmitter
  - External trigger device: external switch
  - Receiver models: GR-B1F-20, GR-B2F-20
    https://en.goodwe.com/Ftp/EN/Downloads/User%20Manual/GW_RSD-20_Quick-Installation-Guide-POLY.pdf

5 Equipment Inspection and Storage

5.1 Equipment Inspection

Before signing for receipt of the product, please carefully check the following:

1. Check whether the outer packaging is damaged, such as deformation, openings, cracks, or other signs that may cause damage to the equipment in the packaging box. If there is any damage, do not open the packaging and contact your dealer or after-sales service center.
2. Check whether the equipment model is correct. If it does not match, do not open the packaging and contact your dealer or after-sales service center.
3. Check whether the types and quantities of the delivered items are correct and whether there is any damage to the appearance. If there is any damage, contact your dealer or after-sales service center.

5.2 Delivered Items

⚠WARNING

Check whether the types and quantities of the delivered items are correct and whether there is any damage to the appearance. If there is any damage, contact your dealer.
After the delivered items are removed from the packaging, do not place them on rough, uneven, or sharp surfaces to prevent paint loss.

5.2.1 Inverter Deliverables

Component	Description	Component	Description
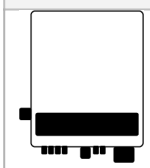	Inverter x 1	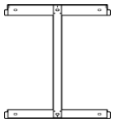	Backplate x 1

Component	Description	Component	Description
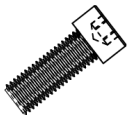	Back-mounting fastening screws x 2	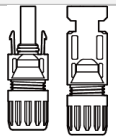 or 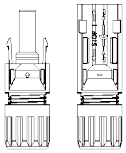	PVconnector GW12KL-ET、GW15K-ET、GW20K-ET：4 GW18KL-ET、GW25K-ET、GW29.9K-ET、GW30K-ET：6
 or 	PVwiring tool x 1	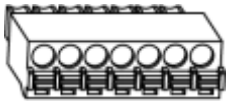	7PINcommunication terminal x 1
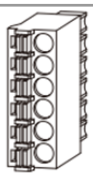	6PINcommunication terminal x 1	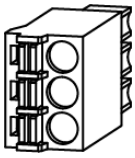	3PINcommunication terminal x 1
	Protection grounding screw x 1		Tubular terminal x N The tubular terminals supplied with the box vary depending on the inverter configuration. Please refer to the actual items.
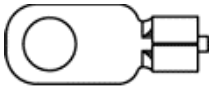	Protection grounding terminal x 1	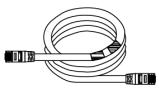	BMS/Metercommunication cable GW12KL-ET、GW15K-ET、GW20K-ET：2 GW18KL-ET、GW25K-ET、GW29.9K-ET、GW30K-ET：3

Component	Description	Component	Description
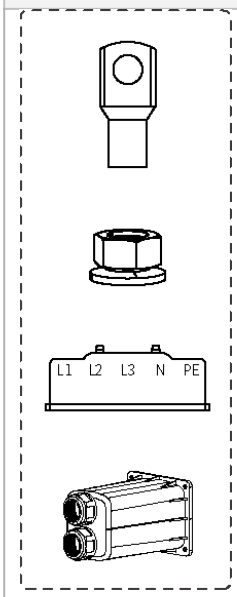 or 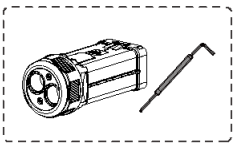 or 	Please refer to the actual shipment • OTterminal x 12 • AC terminal flange nuts x 20 • AC terminal insulation plate x 1 • AC terminal protection cover x 1 • Hex wrench or T-handle wrenchx 1	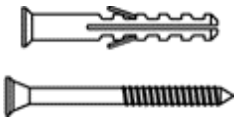	Expansion screws x 6
		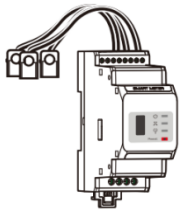 or 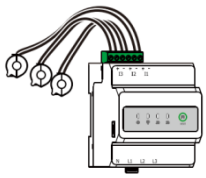	Smart meter and accessories x 1 Please refer to the actual shipment
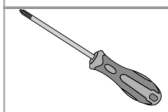	Screwdriver x 1	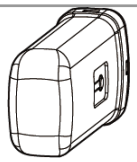 or 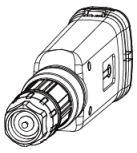	Communication module x 1
	Product documentation x 1		

Component	Description	Component	Description
 wiring tool 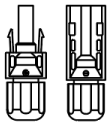 Battery connector	(Optional) wiring tool x 1 Battery connector: GW12KL-ET、GW15K-ET、GW20K-ET：1 GW18KL-ET、GW25K-ET、GW29.9K-ET、GW30K-ET：2		
 wiring tool  Hex screwdriver 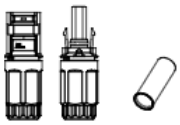 Battery connector	(Optional) wiring tool x 2 Hex screwdriverx 1 Battery connector: GW12KL-ET、GW15K-ET、GW20K-ET：1 GW18KL-ET、GW25K-ET、GW29.9K-ET、GW30K-ET：2		

Component	Description	Component	Description
	Cable ties x 10	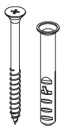	Expansion screws x 4
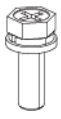	M5 hex screws x 10		M5 nuts x 5
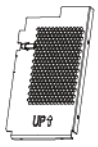	Protection cover right side panel x 1	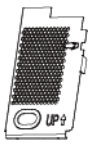	Protection cover left side panel x 1

Component	Description	Component	Description
	Protection cover bottom plate x 1		Protection cover front cover x 1

Table41 **Protection cover accessories (Australia only)**

5.2.2 Battery Delivery Items

5.2.2.1 Lynx C Series 60 Kwh Commercial and Industrial Battery System

Component	Quantity	Component	Quantity
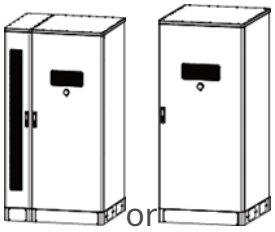 or	Battery system x 1 GW60KWH-D-10: with AC compartment GW60KWH-D-10 (without expansion cabinet): without AC compartment		• Battery-to-battery connecting aluminum busbar When all aluminum busbars are shipped with the accessories, the quantity in the accessories is 10 • When some of the aluminum busbars are shipped with the accessories, the quantity in the accessories is 3 (the other aluminum busbars are already installed on the battery)

Component	Quantity	Component	Quantity
	Battery-to-high-voltage box connecting aluminum busbar • When the aluminum busbar is shipped with the accessories, the quantity in the accessories is 1 • When the aluminum busbar is shipped installed on the battery, the quantity in the accessories is 0		Battery-to-high-voltage box fixing screw x 2
	Battery-to-battery fixing screws • When all aluminum busbars are shipped with the accessories, the number of screws in the accessories is 22 • When some of the aluminum busbars are shipped with the accessories, the number of screws in the accessories is 6		Lifting ring x 4

Component	Quantity	Component	Quantity
	Inverter Back-up terminal x 5		M12 waterproof component x 2
	M18 waterproof component x 2		M20 waterproof component x 2
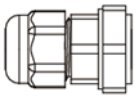	M22 waterproof component x 4		Cable tie x 10
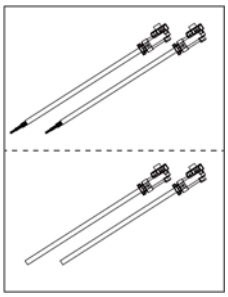	Inverter-to-high-voltage box power cable GW60KWH-D-10 (without expansion cabinet): 0 GW60KWH-D-10：1	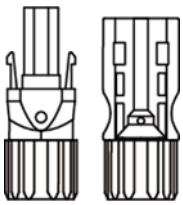	Inverter battery terminal GW60KWH-D-10 (without expansion cabinet): 0 GW60KWH-D-10：N N: Please refer to the actual product shipment
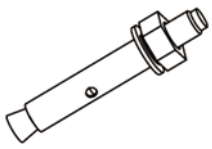	Expansion bolt x 4	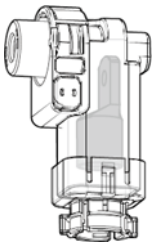	High-voltage box power terminal GW60KWH-D-10 (without expansion cabinet): 2 GW60KWH-D-10：1

Component	Quantity	Component	Quantity
	Air conditioner water pipe x 1		M5 nut x 9
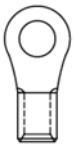	Protection grounding terminal x 1	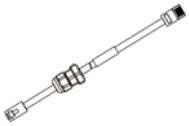	Inverter-to-high-voltage box communication cable GW60KWH-D-10：1 GW60KWH-D-10 (without expansion cabinet): 0
	Product information x 1	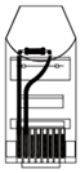	Termination resistor x 2 GW60KWH-D-10 (without expansion cabinet): 1 GW60KWH-D-10：0
	Wrench x 0: Do Not Touch label at fire protection area Wrench x 1: Others	-	-

5.2.2.2 BAT-S Series 15.3–56.3 Kwh High-Voltage Battery

NOTE
Supported configurations and installation solutions vary by region; please contact sales for details.

Battery PACK

Component	Description
Stacked Installation 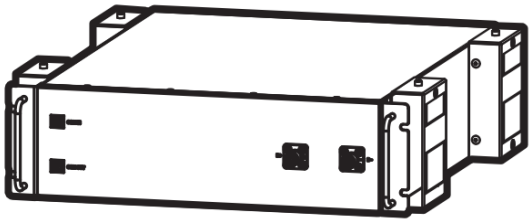	Battery PACK • GW15.3-BAT-I-G10：× 3 • GW20.4-BAT-I-G10：× 4 • GW25.6-BAT-I-G10：× 5 • GW30.7-BAT-I-G10：× 6 • GW35.8-BAT-I-G10：× 7 • GW40.9-BAT-I-G10：× 8 • GW46.0-BAT-I-G10：× 9 • GW51.2-BAT-I-G10：× 10 • GW56.3-BAT-I-G10：× 11
Rack mounting 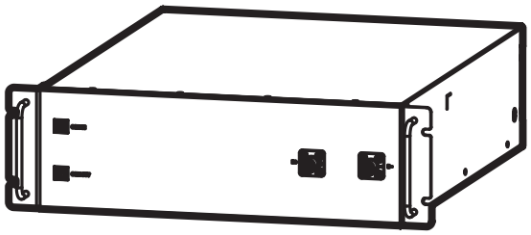	

PCU

Component	Description
Stacked Installation 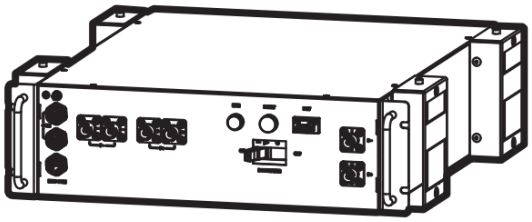	PCU × 1
Rack mounting 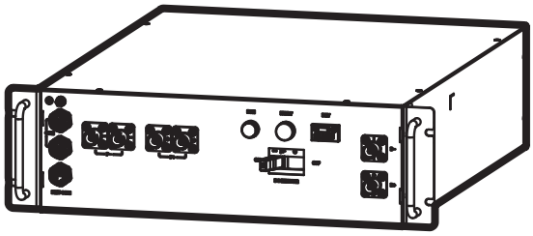	

Accessories

- **Stacked Installation**

Component	Description	Component	Description
	Ground anchoring bracket×4		Wall-lock bracket×4
	Equipotential bonding plate×15		M5 screw×N
	Cable grommet×1		Expansion bolt×8
	Adjustable feet×4		Base×1
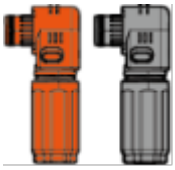	Power connector×2	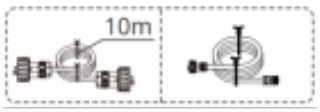	Battery-to-inverter communication cable×1
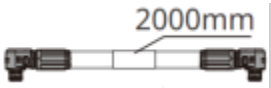	B- power cable×1		B+ power cable×1
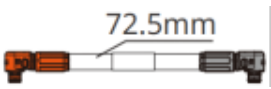	Battery internal power cable ×N	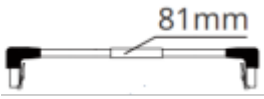	Battery internal communication cable ×N
	Protection grounding terminal ×2		M12 expansion bolt ×4

Component	Description	Component	Description
	Nameplate×1		Cable tie×10
	Reducer×4 (Equipped only on units shipped after April 3, 2026)		Product documentation×1

- **Rack mounting**

Component	Description	Component	Description
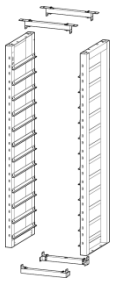	Battery rack ×1		Rubber pad×4
	M5 screw×N	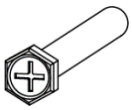	ST6.3screw×4
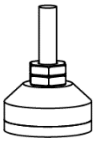	Adjustable feet×4	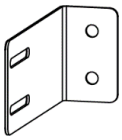	Wall fixing bracket×2
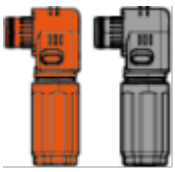	Power connector×2	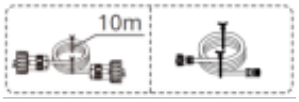	Battery-to-inverter communication cable×1
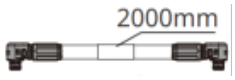	B- power cable×1		B+ power cable×1

Component	Description	Component	Description
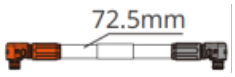	Battery internal power cable×N	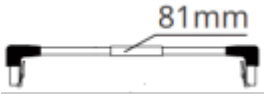	Battery internal communication cable×N
	Protection grounding terminal×2		M12 expansion bolt×4
	Nameplate×1		Cable tie×10
	Reducer×1		Product documentation×1

5.2.2.3 BAT Series 61.4-112.6 Kwh Commercial and Industrial Battery System

Component	Description	Component	Description
	Battery cabinet×1		Expansion screw×4
	GroundingM5screw×3		Grounding terminal×3
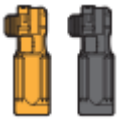	Inverter battery connection terminal25mm2×2	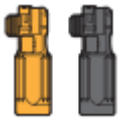	Inter-battery connection terminal50mm²×2

Component	Description	Component	Description
	Inter-Pack series harness×N • GW61.4-BAT-AC-G10：×5 • GW92.1-BAT-AC-G10：×8 • GW102.4-BAT-AC-G10：×9 • GW112.6-BAT-AC-G10：×10		Pack negative to high-voltage box negative harness×1
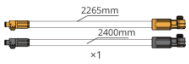	Inverter battery connection (positive)×1 Inverter battery connection (negative)×1	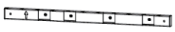	Adapter hanger bracket×2 (Only required for ET100)
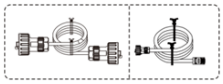	Battery-to-inverter communication cable×1	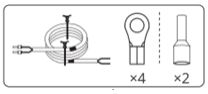	Air conditioner power supply harness kit×1
	Lifting ring×4		Cable tie×20
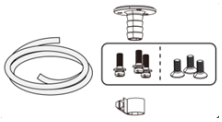	Air conditioner water pipe kit×1		Fireproof putty×8
	Corrugated tube connector×6		25mm² to 10mm² round tube terminal×4
	Product documentation×1	-	-

5.2.3 Smart Meter Deliverables (GM3000)

Component	Quantity	Component	Quantity

	Smart meter andCT x 1	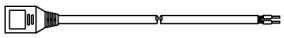	2PINterminal andRJ45terminal adapter cable x 1
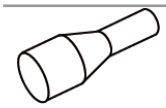	Tubular terminal x 3		USBend cap x 1
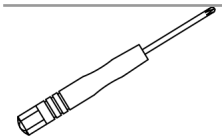	Screwdriver x 1	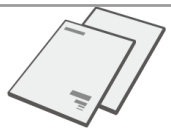	Product documentation x 1

5.2.4 Smart Meter Deliverables GM330 & GMK330

5.2.4.1 Accessories List

Component	Description	Component	Description
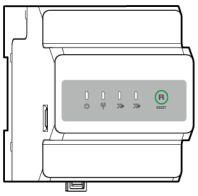	Smart meter x1 GMK330:CT×3; GMK360: CT×6; GM330: CT x 0。		2-pin communication terminal x1 Applicable to GM330.
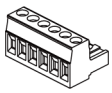	6-pin communication terminal x1 Applicable to GM330.	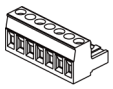	7-pin communication terminal x1 Applicable to GM330.
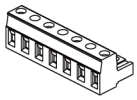	Meter communication terminal Applicable to GMK330/GMK360.		RS485 communication terminal x 1
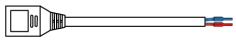	2PINterminal andRJ45terminal adapter cable x 1		Screwdriver x1

Component	Description	Component	Description
	Tubular terminal GMK330/GMK360: x 5 ; GM330: x 6。		Product documentation x 1

5.3 Equipment Storage

NOTE
[1] The storage time starts from the SN date on the battery outer packaging. After the storage period is exceeded, charge/discharge maintenance is required. (Battery maintenance time = SN date + charge/discharge maintenance cycle). For how to check the SN date, refer to:12.4.Meaning of SN code(Page 332)。 [2] After the charge/discharge maintenance is passed, if a Maintaining Label is affixed to the outer box, update the maintenance information on the Maintaining Label; if there is no Maintaining Label, record the maintenance time and battery SOC yourself and keep the data properly for maintenance record retention.

If the equipment is not put into use immediately, store it according to the following requirements. After long-term storage, the equipment can be used only after inspection and confirmation by professional personnel.

1. If the inverter has been stored for more than two years or has not been operated for more than 6 months after installation, it is recommended to have it inspected and tested by professional personnel before putting it into use.
2. To ensure good electrical performance of the internal electronic components of the inverter, it is recommended to power it on once every 6 months during storage. If it has not been powered on for more than 6 months, it is recommended to have it inspected and tested by professional personnel before putting it into use.
3. To ensure battery performance and service life, it is recommended to avoid long-term idle storage. Long-term storage may cause deep discharge of the battery, resulting in irreversible chemical loss, capacity degradation, or even complete failure. It is recommended to use it promptly. If the battery needs to be stored for a long time, perform maintenance according to the following requirements:

Battery	Initial SOC range for battery storage	Recommended Storage Temperature	Charge/discharge maintenance cycle[1]	Battery maintenance method[2]
Lynx C Series 60Kwh Commercial and Industrial Battery System	30%~40%	0~35℃	-20~0℃，≤1month 0~+35℃，≤6month 35~+45℃，≤1month	For maintenance methods, please consult your dealer or after-sales service center.
BAT-S series 15.3-56.3kWh high-voltage battery	30%~40%	0~35℃	-20~35℃（≤12months) 35~+45℃（≤6months)	
BAT-C Series 61.4-112.6Kwh Commercial and Industrial Battery System				

Packaging requirements:

Ensure that the outer packaging box is not removed and the desiccant inside the box is not lost.

Environmental requirements:

1. Ensure that the equipment is stored in a cool place and protected from direct sunlight.
2. Ensure that the storage environment is clean, with appropriate temperature and humidity ranges and no condensation. If condensation is present at the equipment ports, do not install the equipment.
3. Ensure that the equipment is kept away from flammable, explosive, corrosive, and other hazardous materials during storage.

Stacking requirements:

1. Ensure that the inverter is stacked at the height and in the orientation indicated by the labels on the packaging box.

2. Ensure that there is no risk of the inverter tipping over after stacking.

6 Installation

⚠DANGER

Use the delivered accessories shipped with the equipment for equipment installation and electrical connections; otherwise, any equipment damage caused is not covered by the warranty.

6.1 System Installation and Commissioning Process

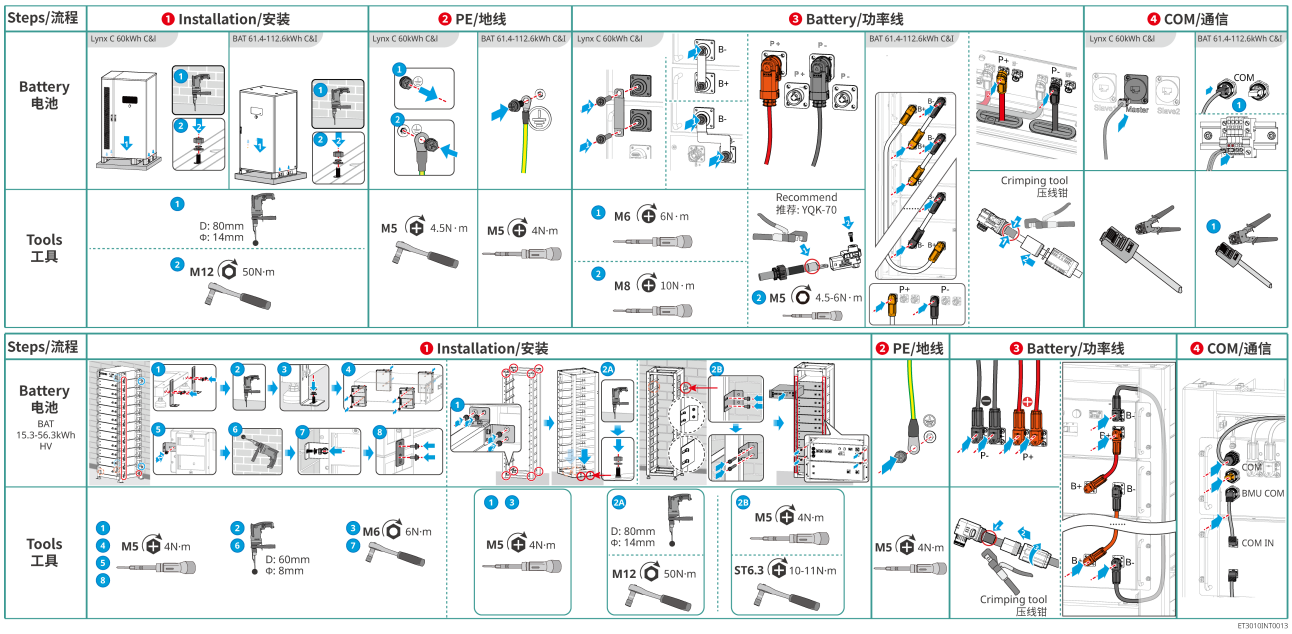

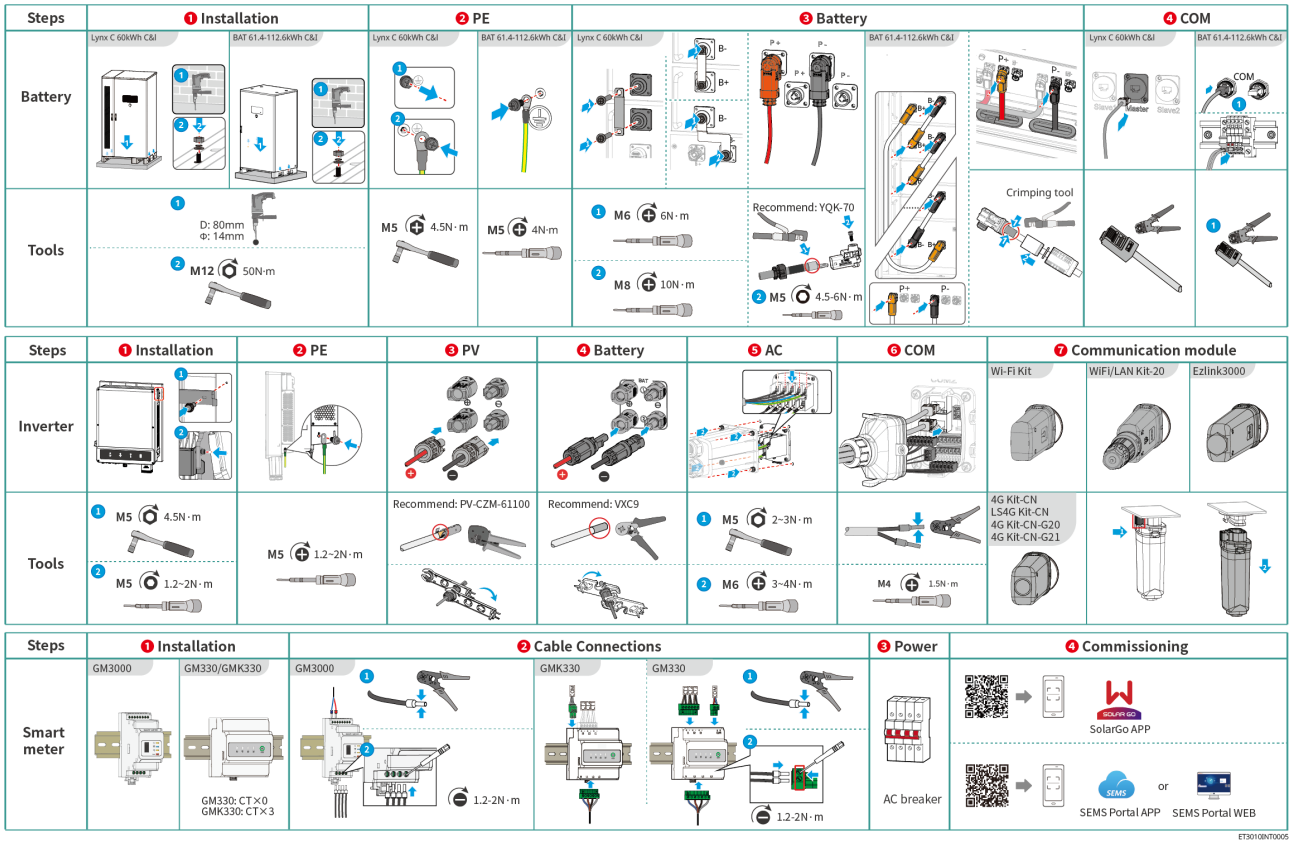

6.2 Installation Requirements

6.2.1 Installation Environment Requirements

NOTE

If installed in an environment below 0°C, the battery cannot be recharged to recover energy after being fully discharged, resulting in Battery Undervoltage protection.
GW60KWH-D-10: Charging temperature range: 0<T<55°C; discharging temperature range: -25<T<55°C

1. Do not install the equipment in flammable, explosive, corrosive, or similar environments.
2. The temperature and humidity of the equipment installation environment must be within the appropriate range.
3. The installation position must be out of reach of children and avoid locations where it can be easily touched.
4. During inverter operation, the enclosure temperature may exceed 60°C. Do not touch the enclosure before it has cooled to prevent burns.

5. It is recommended to install the equipment in a sheltered location, away from direct sunlight, rain, snow accumulation, and similar conditions. If site conditions prevent complete sheltering, ensure that the ambient temperature, humidity, and other conditions always remain within the allowable ranges specified in the equipment specifications, and take necessary protective measures.
6. Adverse environmental conditions such as direct sunlight and high temperatures may cause derating of the inverter output power. When selecting the installation site, fully consider heat dissipation conditions and avoid direct sunlight on the equipment itself.
7. The equipment installation and storage site should avoid areas directly exposed to cold air from air-conditioner outlets. Excessive local temperature differences may cause condensation inside the equipment, which may lead to equipment damage.
8. The installation space must meet the equipment's ventilation and heat dissipation requirements and operation space requirements.
9. The installation environment must meet the equipment's Ingress Protection Rating.
   - The inverter and smart communication stick are suitable for indoor and outdoor installation;
   - The meter is suitable for indoor installation;
   - Lynx C series 60kWh commercial and industrial battery system and BAT-CSeries 61.4-112.6Kwh commercial and industrial battery system are suitable for indoor and outdoor installation,BAT-SSeries 15.3-56.3Kwh high-voltage battery is suitable for indoor installation and must be kept ventilated.
10. When the equipment is installed indoors, ensure that there are no obstacles within a 10 m diameter around the installation location.
11. During construction and installation, ensure that the bottom of the equipment is higher than the local historical maximum water level.
12. The equipment installation height must facilitate operation and maintenance, ensuring that equipment indicators and all labels are easy to view, and wiring terminals are easy to operate.
13. The equipment installation altitude must be lower than the Max. Operating Altitude.
14. The battery system must be installed on flat, dry ground; it must not be recessed or inclined. Installation on ground prone to water accumulation or subsidence is strictly prohibited. Ensure that the ground can bear the Weight of the battery system.
15. Before installing equipment outdoors in salt damage areas, please consult the equipment manufacturer. Salt damage areas mainly refer to areas within 500 m of the coast. The affected area is related to sea breeze, precipitation, terrain, and

other conditions.

16. Keep away from strong magnetic fields to avoid electromagnetic interference. If there is a radio station or wireless communication equipment operating below 30 MHz near the installation location, install the equipment in accordance with the following requirements:
    - Inverter: Add ferrite cores with multiple turns of winding at the inverter's DC input line or AC output line, or add a low-pass EMI filter; or ensure that the distance between the inverter and wireless electromagnetic interference equipment exceeds 30 m.
    - Other equipment: The distance between the equipment and wireless electromagnetic interference equipment must exceed 30 m.
17. The length of the DC cable and communication cable between the battery and the inverter must be less than 3 m. Please ensure that the installation distance between the inverter and the battery meets the cable length requirements.

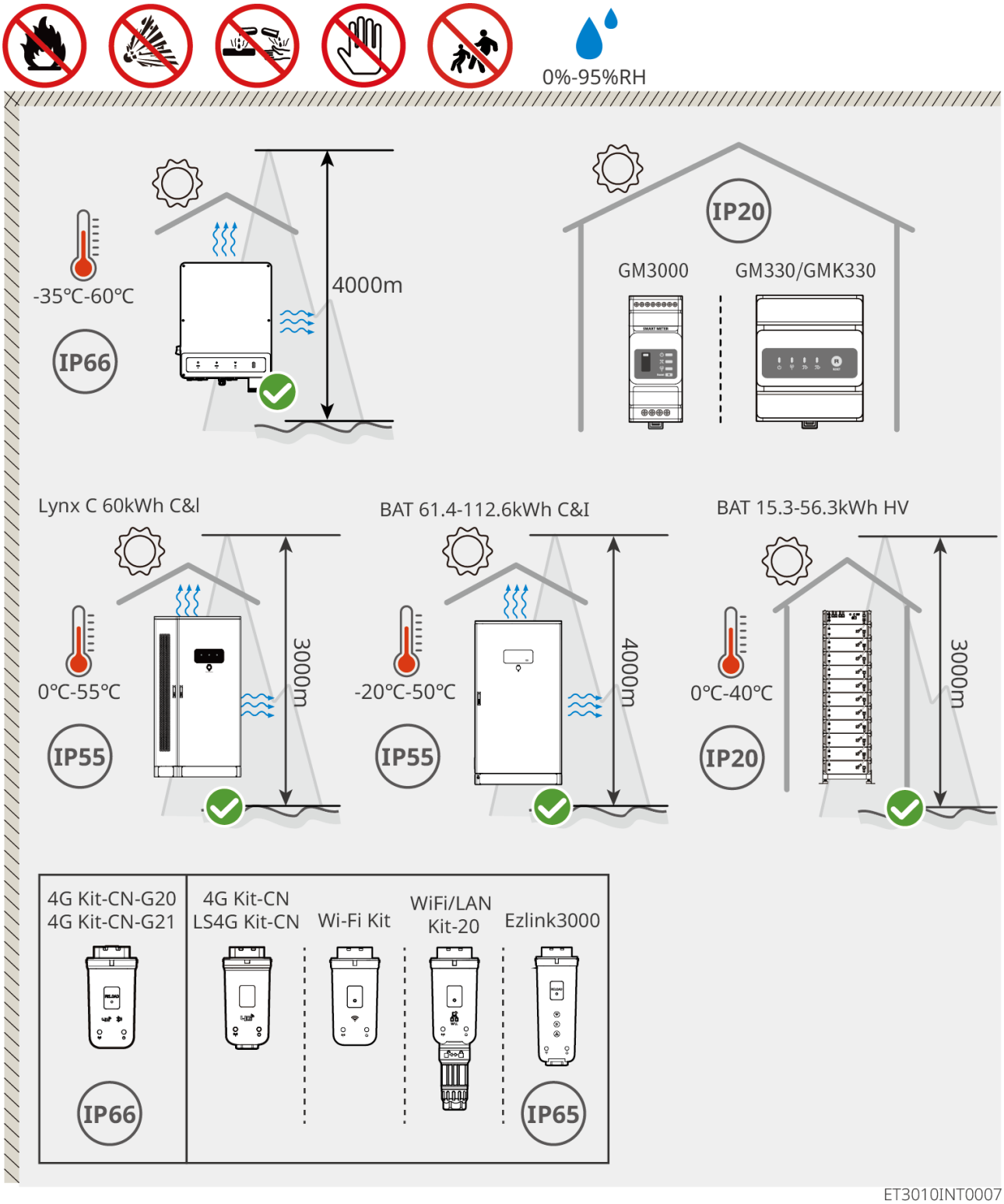

ET3010INT0007

6.2.2 Installation Foundation Requirements

1. The foundation material must be C25 plain concrete hardened ground or another

non-combustible surface.

2. The foundation must have reserved cable trenches or cable outlet holes to facilitate equipment wiring.
3. The equipment (including height, embedded parts for expansion bolts, conduits, etc.) shall be adjusted according to the process and on-site conditions.
4. The top elevation of the equipment foundation can be adjusted according to the actual requirements of the equipment and site.
5. Ensure the equipment is installed horizontally and must not be tilted or inverted.
6. Trench Requirements:
   - If the equipment uses bottom cable entry, the trench must have a dust-proof and rodent-proof design to prevent foreign objects from entering.
   - The trench must have a waterproof and moisture-proof design to prevent cable aging and short circuits, which may affect normal operation of the equipment.
   - Since the equipment cables are relatively thick, sufficient cable space must be reserved in the trench design to ensure smooth cable connection and prevent abrasion.

NOTE

Conduits can be replaced on site with four PVC pipes of 125 mm diameter; no conduits need to be reserved in indoor environments.

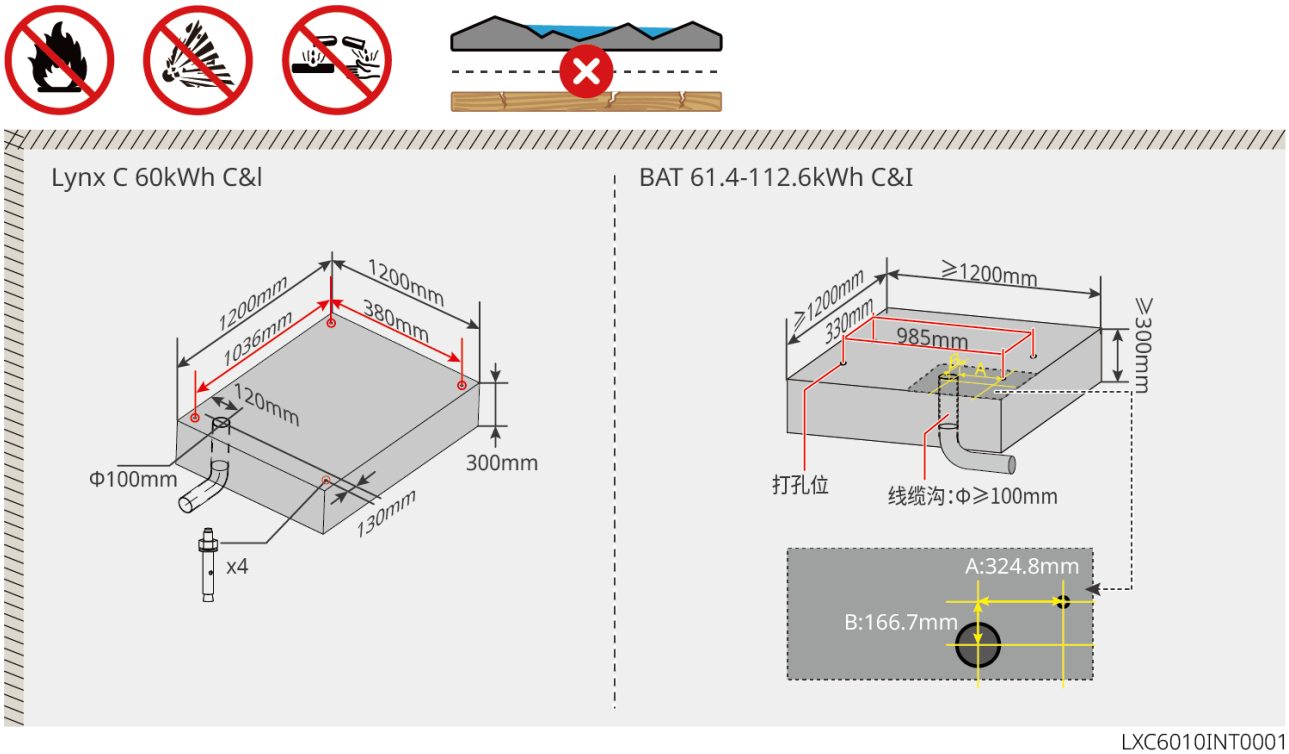

LXC6010INT0001

6.2.3 Installation Space Requirements

When installing equipment in the system, reserve a certain space around the equipment to ensure sufficient space for installation and heat dissipation.

NOTE
The specific values for the battery installation space can be adjusted according to the actual installation scenario and local regulations.

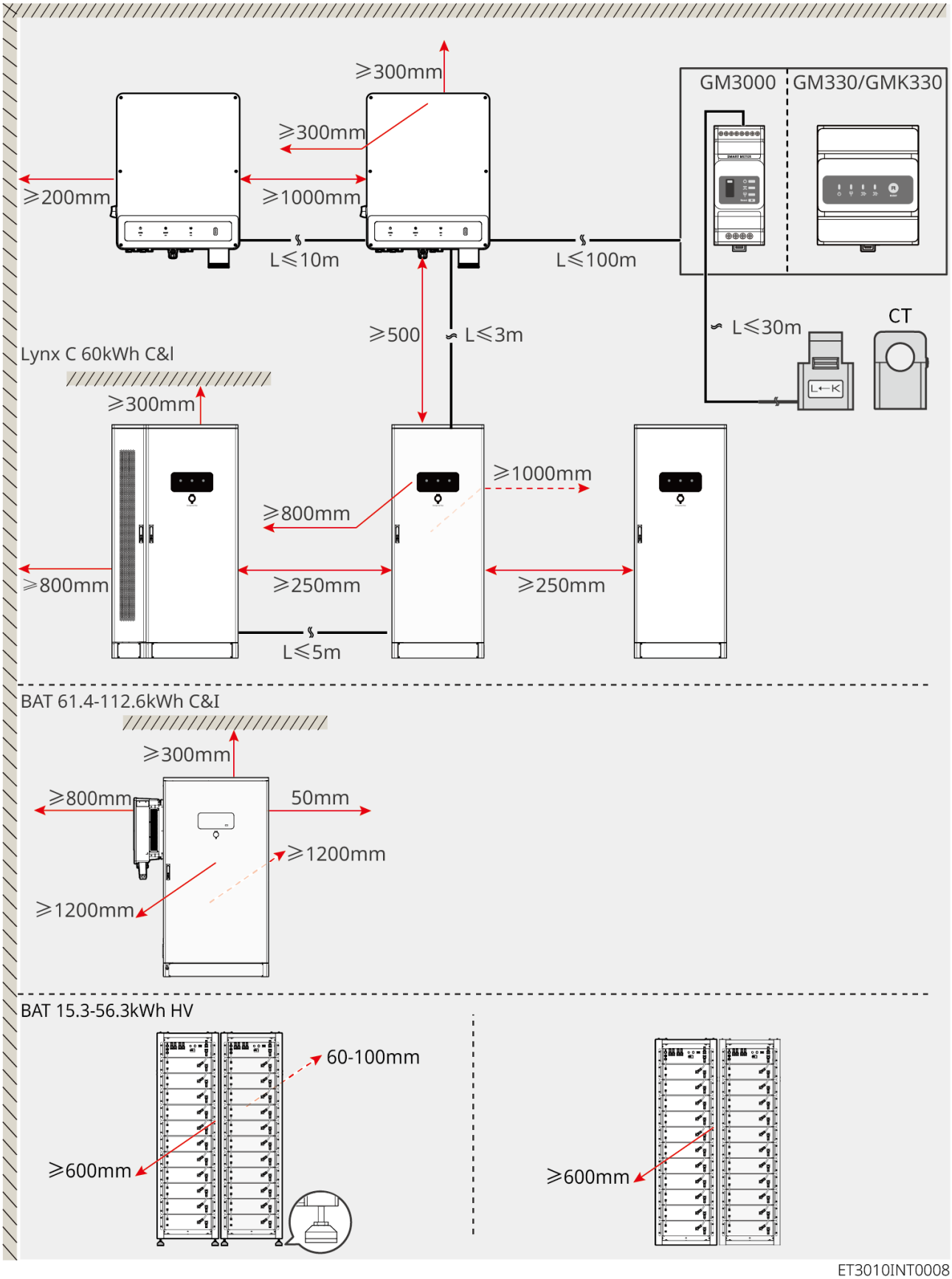

ET3010INT0008

6.2.4 Tool Requirements

NOTE
During installation, it is recommended to use the following installation tools. If necessary, other auxiliary tools can be used on site.

Installation Tools

Tool Type	Description	Tool Type	Description
	Diagonal pliers	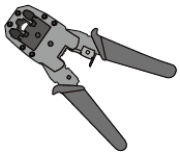	RJ45Modular plug crimping tool
	Wire stripper	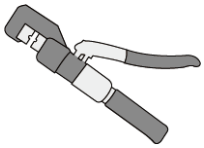	YQK-70Hydraulic crimping tool
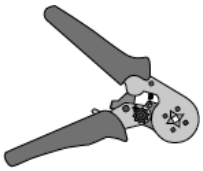	VXC9Hydraulic crimping tool		Spirit level
	Open-end wrench	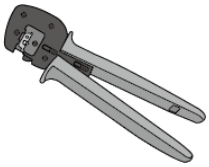	PVterminal crimping tool PV-CZM-61100
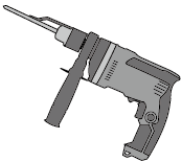	Impact drill (drill bitΦ8mm)	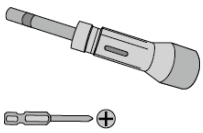	Torque wrench M5/M6/M8/M12/M16/ M18/M22
	Rubber mallet	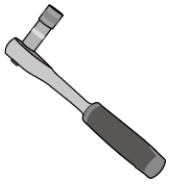	Socket wrench set

Tool Type	Description	Tool Type	Description
	Marker pen	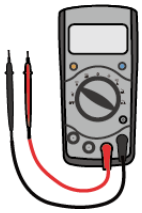	Multimeter Range≤1100V
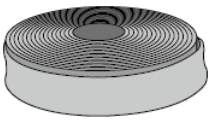	Heat-shrink tubing	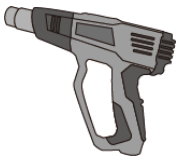	Heat gun
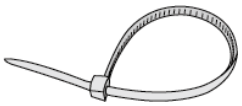	Cable ties		Vacuum cleaner
	Spirit level		

Personal protective equipment

Tool Type	Description	Tool Type	Description
	Insulated gloves, protective gloves	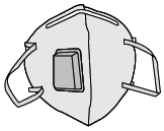	Dust mask
	Goggles		Safety shoes

6.3 Equipment Handling

⚠WARNING

1. During transportation, transfer, installation, and other operations, the laws, regulations, and relevant standards of the country and region must be complied with.
2. Before installation, transport the equipment to the installation site. During transportation, to avoid personal injury or equipment damage, observe the following precautions:
   - Please assign the corresponding number of personnel based on the equipment Weight to prevent the equipment from exceeding the Weight range that personnel can handle and causing personal injury.
   - Please wear safety gloves to prevent injury.
   - Please ensure that the equipment remains balanced during handling to avoid falling and tipping.
   - During handling, please ensure that the cabinet doors are locked securely.

NOTE

- The equipment can be transported to the installation site by hoisting or forklift.
- When hoisting the equipment, use flexible slings or straps. The load-bearing capacity of a single strap must be ≥2t.
- When using a forklift to handle the equipment, the forklift load capacity must be ≥2t.

- **Lynx C Series 60Kwh Commercial and Industrial Battery System**

Forklift transport method 1

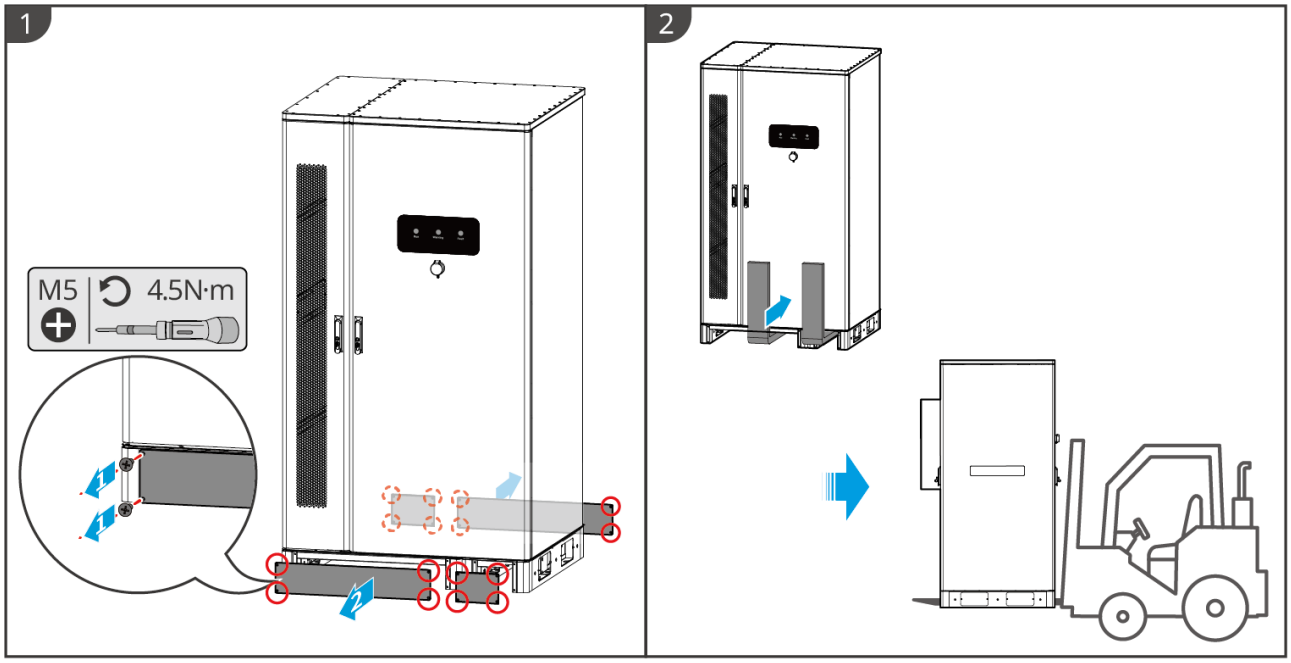

LXC6010INT0002

Forklift transport method 2

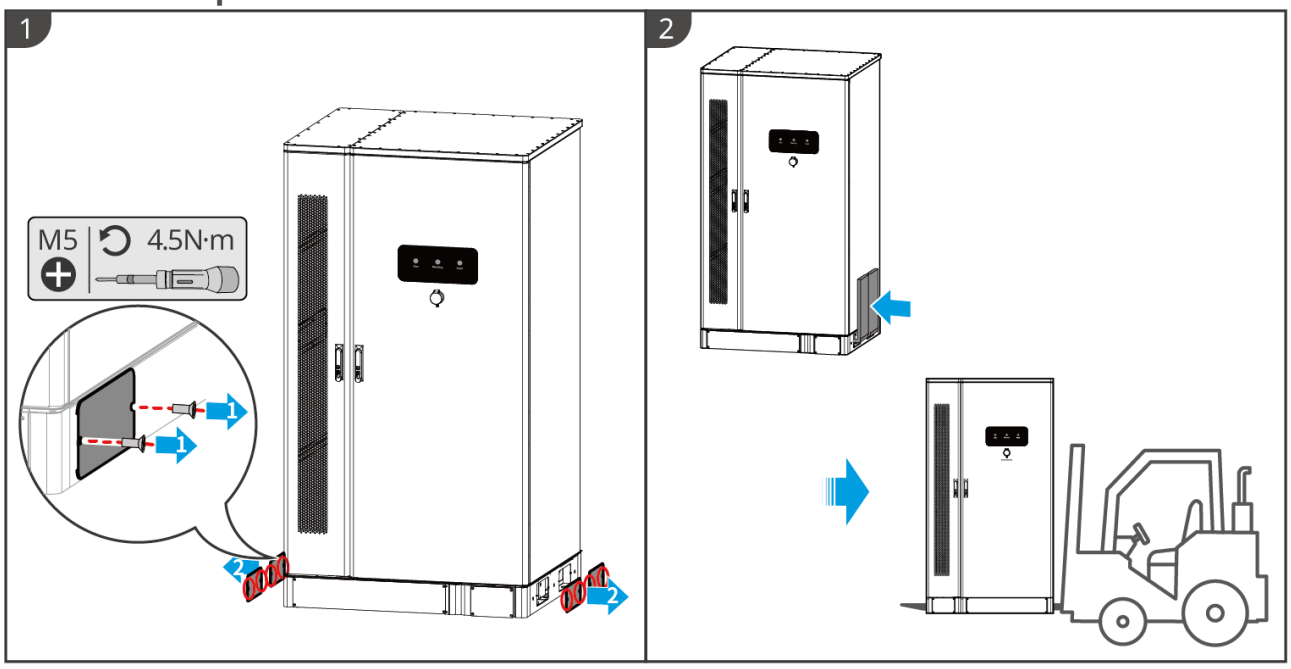

LXC6010INT0003

Hoisting transport:

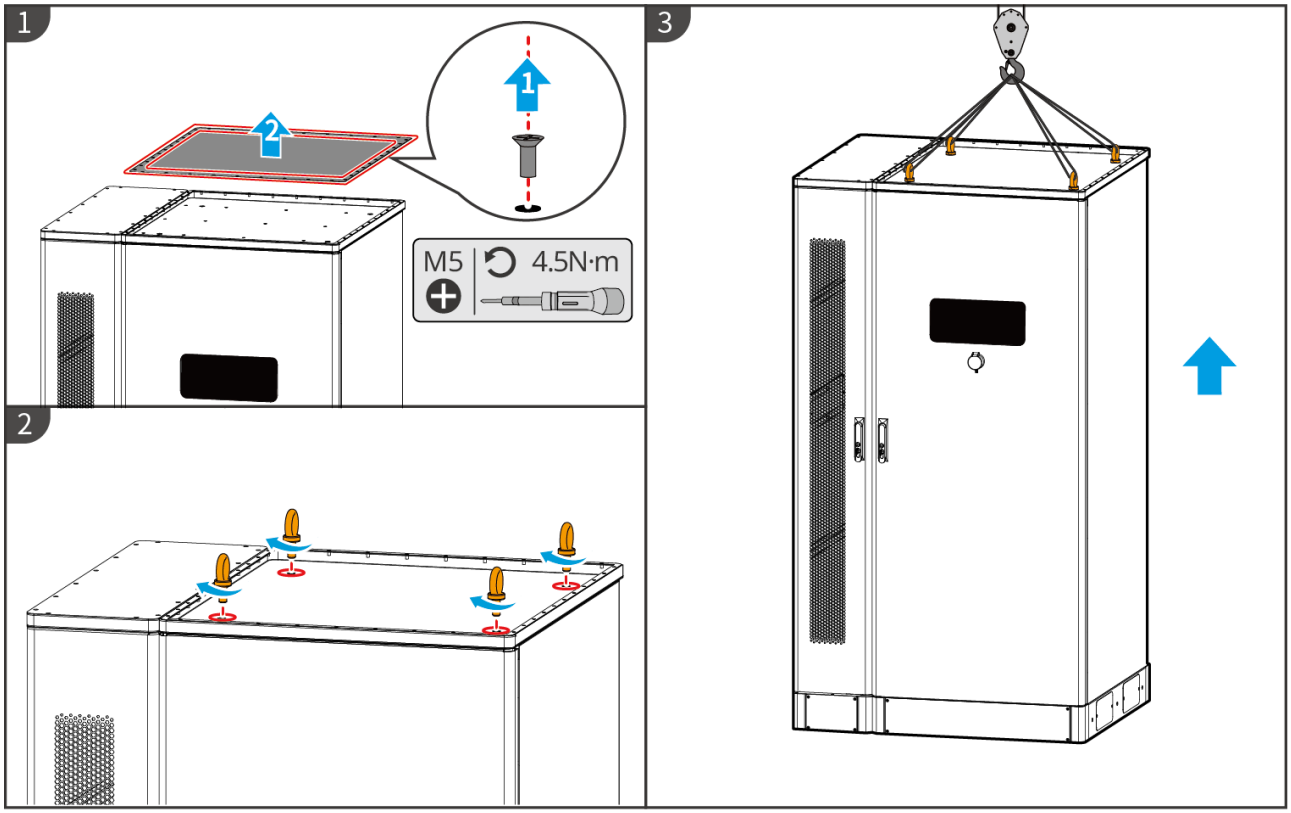

LXC6010INT0004

- **BAT-SSeries 15.3-56.3Kwh High-Voltage Battery**

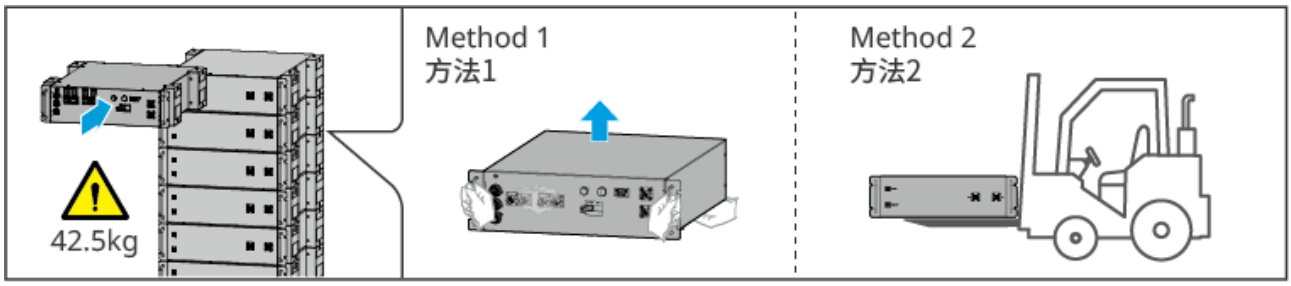

BAT10INT0032

- **BAT-CSeries 61.4-112.6Kwh Commercial and Industrial Battery System**

NOTE

- Before using a forklift to handle the equipment, the baffle plate must be removed.
- During shipment, the battery system is fastened to the pallet with bottom screws. Before installation, please remove the pallet first.

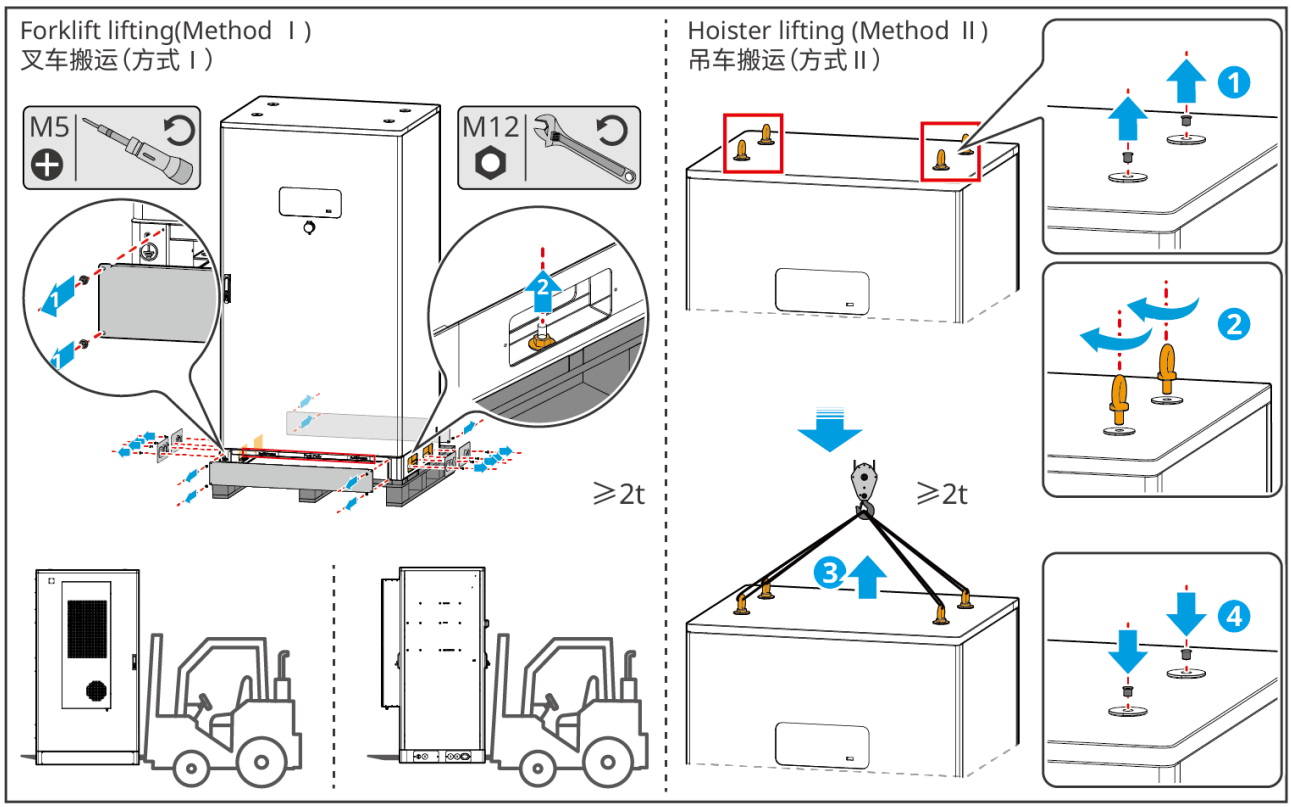

BAT10INT0003

6.4 Install the Inverter

The inverter is installed in the battery system cabinet

⚠CAUTION

Ensure that the inverter is installed securely to prevent it from falling and injuring personnel.

1. Fix the inverter back mounting bracket to the battery system cabinet.

2. (Optional) Use a DC Switch lock to lock the DC Switch in“OFF”state, mount the inverter on the backplate. The DC Switch lock is user-supplied; ensure that the hole diameter of the DC Switch lock meets the requirements.
3. Tighten the screws on both sides to secure the backplate and inverter, ensuring the inverter is installed securely.

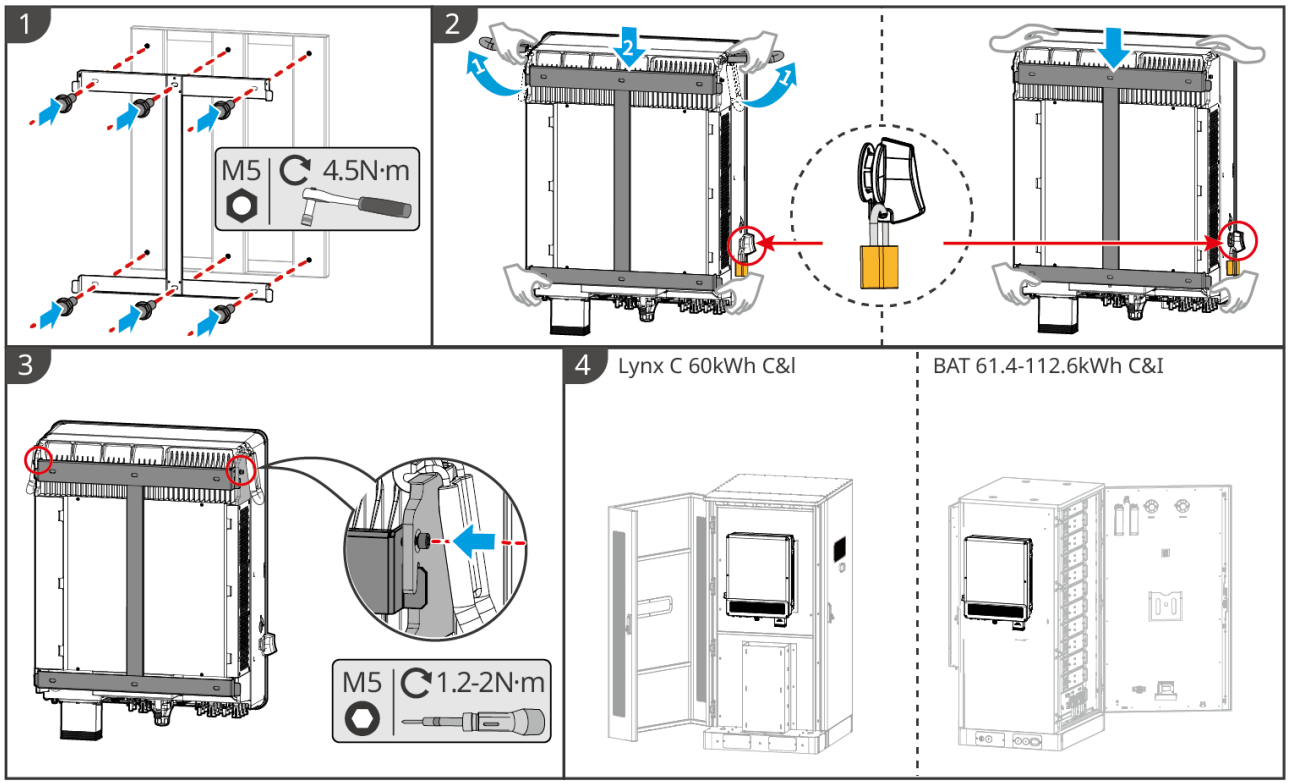

ET3010INT0006

Inverter installed on the wall

⚠CAUTION

- When drilling, ensure that the drilling positions avoid water pipes, cables, etc. in the wall to prevent danger.
- When drilling, wear goggles and a dust mask to prevent dust from being inhaled into the respiratory tract or falling into the eyes.
- Ensure that the inverter is installed securely to prevent it from falling and injuring personnel.

1. Place the backplate horizontally on the wall and use a marker to mark the drilling positions.

2. Use an impact drill to drill holes.
3. Use expansion screws to fix the inverter backplate bracket to the wall.
4. Use a DC Switch lock to lock the DC Switch in“OFF”state, and mount the inverter on the backplate. (Optional) For Australia only, the DC Switch lock is user-supplied; ensure that the hole diameter of the DC Switch lock meets the requirements.
5. (Optional) Lower the handle.
6. Tighten the screws on both sides to secure the backplate and inverter, ensuring the inverter is installed securely.

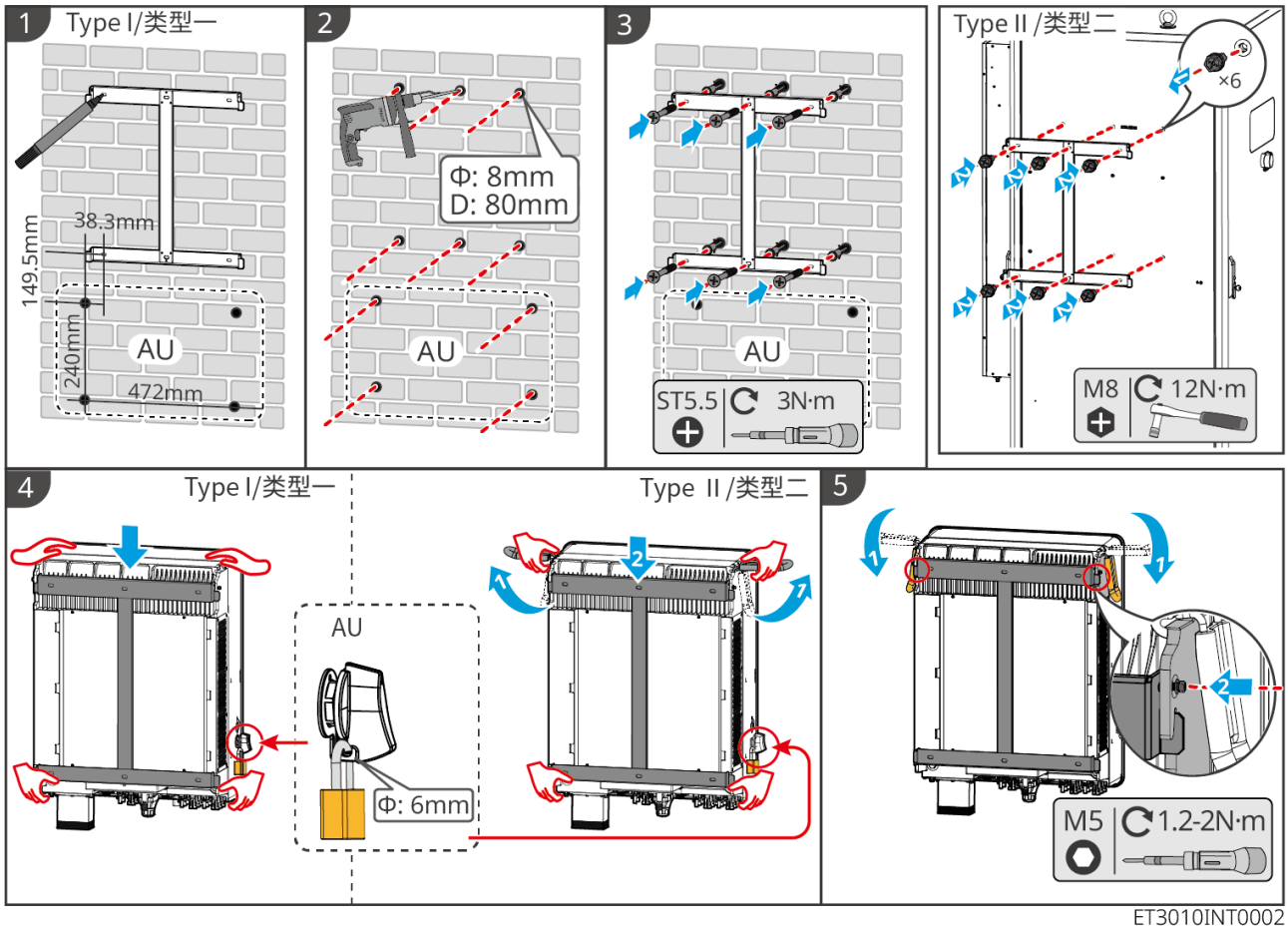

Install the Protection Cover (Australia Only)

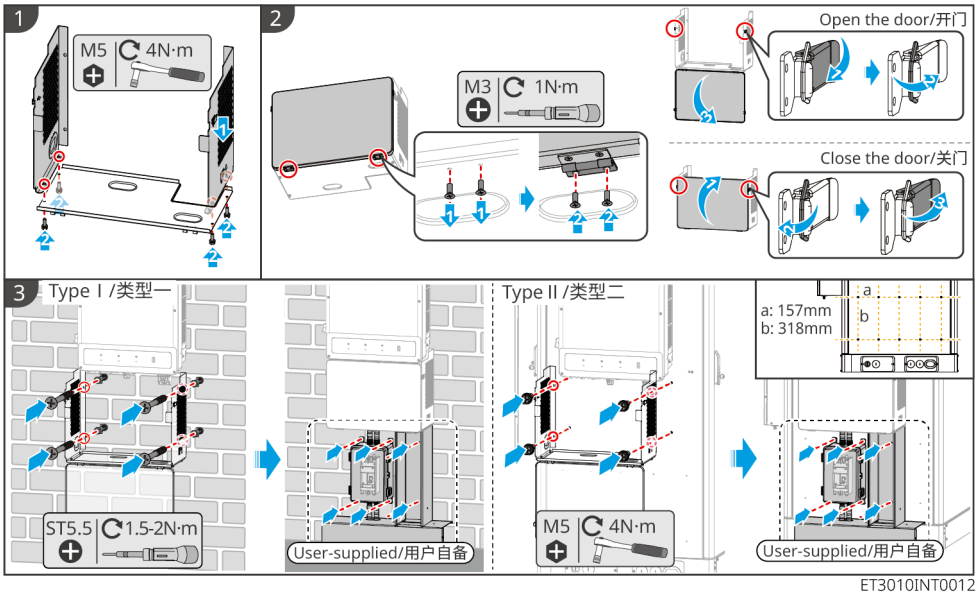

ET3010INT0012

Step1： Assemble the Protection cover.

Step2： Install the front cover.

Step3： Fix the Protection cover to the wall/side of the battery cabinet, and install circuit breakers, waterproof enclosures, and cable trays according to local regulations. For specific requirements, refer to the following table.

Device		Recommended model/specification	Description
Circuit breaker	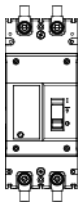	Select according to local laws and regulations • 2P DC Switch • Rated Current ≥63A • Nominal Voltage ≥1000V	User-supplied.

Device		Recommended model/specification	Description
Water proof enclosure	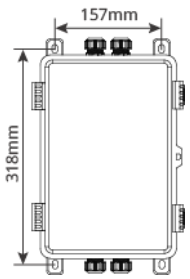	Waterproof rating >IP65 Hole spacing requirements: • Left-right hole spacing: 157 mm • Top-bottom hole spacing: 318 mm Style and dimensions are for reference only.	User-supplied. If the hole spacing of the waterproof enclosure does not meet the requirements and it cannot be fixed to the battery cabinet, please provide your own mounting plate. First, drill holes in the mounting plate as required and fix it to the battery cabinet; then fix the waterproof enclosure to the mounting plate.
Cable tray	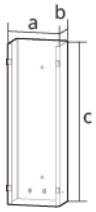	a: 250mm b: 150mm c: 510mm Appearance is for reference only.	User-supplied.

6.5 Install the Battery

WARNING

- Before installation, check that the ground is level and not inclined.
- Ensure that the energy storage system is vertical and closely attached to the ground, with no risk of tipping over.

6.5.1 Open the Cabinet Door

⚠WARNING

- Do not open the cabinet door during transportation and installation.
- After system installation, wiring, and commissioning are completed, close the cabinet door.

Step 1: Unlock the cabinet door using the key.
Step 2: Rotate the door handle to open the cabinet door.

- **Lynx C Series 60 Kwh Commercial and Industrial Battery System**

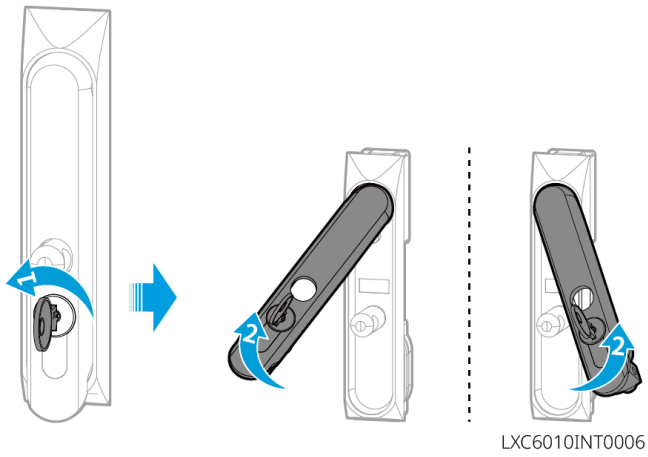

- **BATSeries 61.4-112.6Kwh Commercial and Industrial Battery System**

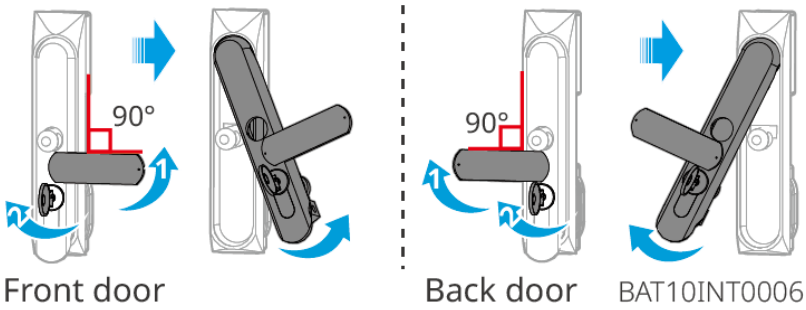

6.5.2 Install the Lynx C Series 60Kwh Commercial & Industrial Battery System

Step 1: Use a marker to mark the drilling positions on the level ground.
Step 2: Use an impact drill with a 14 mm drill bit to drill holes approximately 80 mm

deep, and install expansion bolts.
Step 3: Move the battery system to the hole positions and tighten the expansion bolts using a socket wrench.

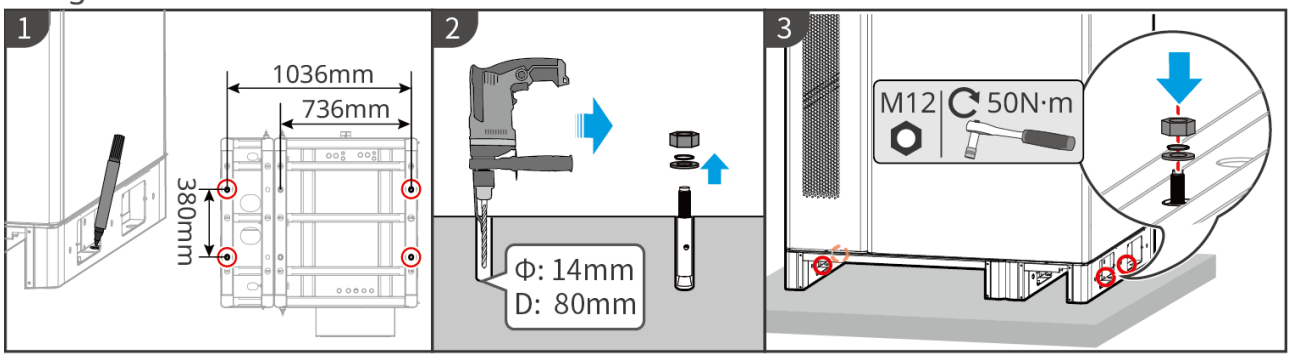

LXC6010INT0005

6.5.3 Install BAT-S Series 15.3–56.3 Kwh High-Voltage Battery

· Stacked Installation

Step 1: Install adjustable feet under the base; the adjustable foot height can be adjusted within 35–45 mm.
Step 2: Secure the floor-lock bracket to the base.
Step 3: Use a pen to mark the drilling positions for expansion bolts on the floor.
Step 4: Install the expansion bolts.
Step 5: Secure the floor-lock bracket to the floor with expansion bolts.
Step 6: Stack the battery PACKs, and pre-tighten the wall-lock brackets on the first and last battery PACKs.
Step 7: Use a pen to mark the drilling positions for expansion bolts on the wall, secure the wall-lock brackets with expansion bolts, and then tighten the wall-lock brackets on the battery PACKs.
Step 8: Place the high-voltage box.
Step 9: Install the equipotential bonding plate and cable grommet.

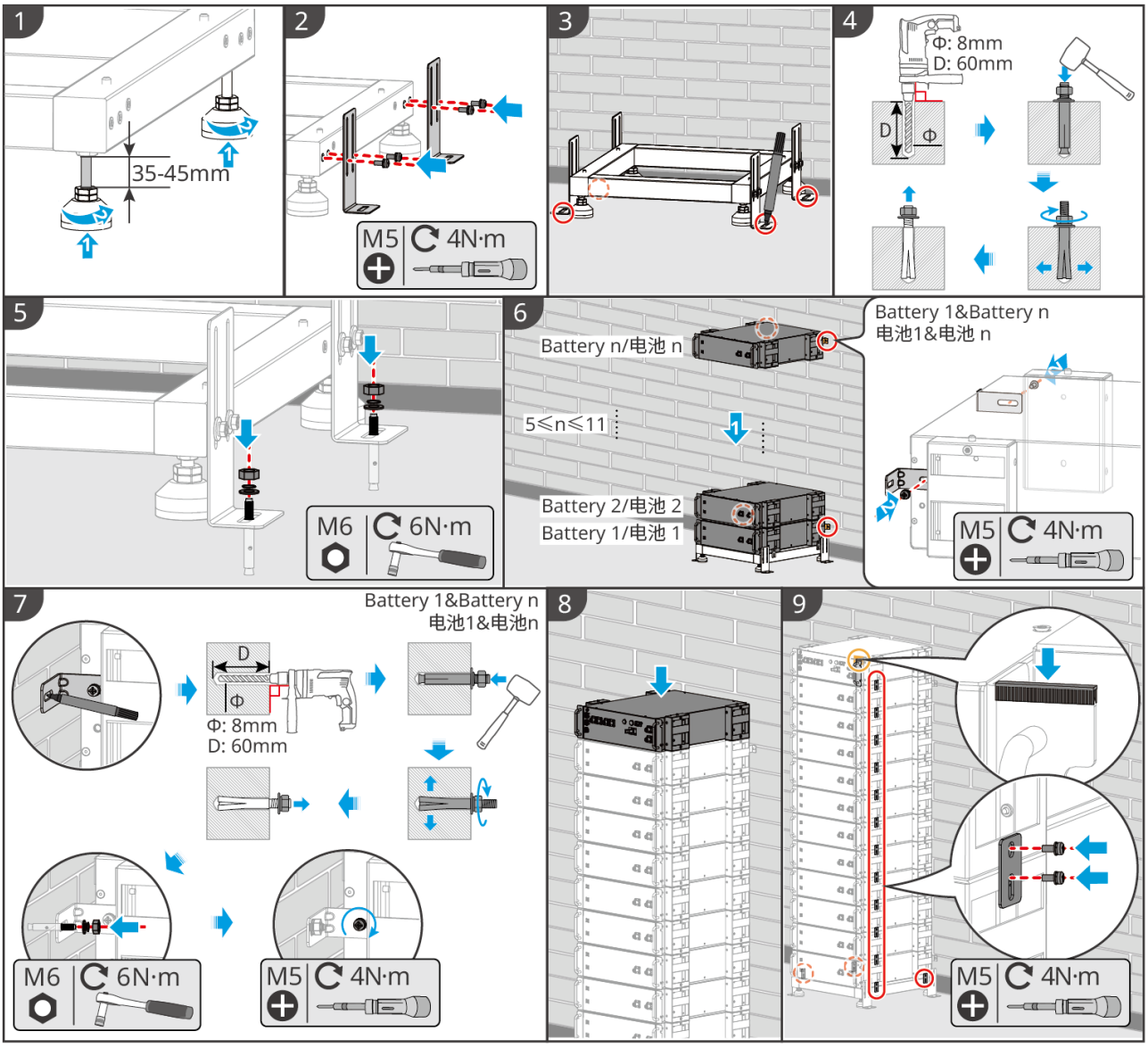

BAT10INT0021

· Battery Rack Installation

Install the Battery Rack

Step1： Lay the bracket flat, align all holes according to the serial number silkscreen, and useM5screws to secure it.

Step2： Place the rack upright according to the arrow marks.

Secure the Battery Cabinet

◦ **A I**

Step3： Use a marker to mark the drilling positions for expansion bolts on the level ground.
Step4： Install the expansion bolts, and secure the battery rack to the level ground with the expansion bolts.

◦ **A II**

Step3： Lay the rack down horizontally and install adjustable feet at the bottom of the rack.
Step4： Place the rack upright and secure the rack to the wall using wall-lock brackets.

Install the High-Voltage Box and Battery Packs

Step5： Push the high-voltage box and batteryPACKs into the rack in sequence, and affix labels to the side of the rack。
Step6： Before using aM5screws to secure the high-voltage box and batteryPACK。

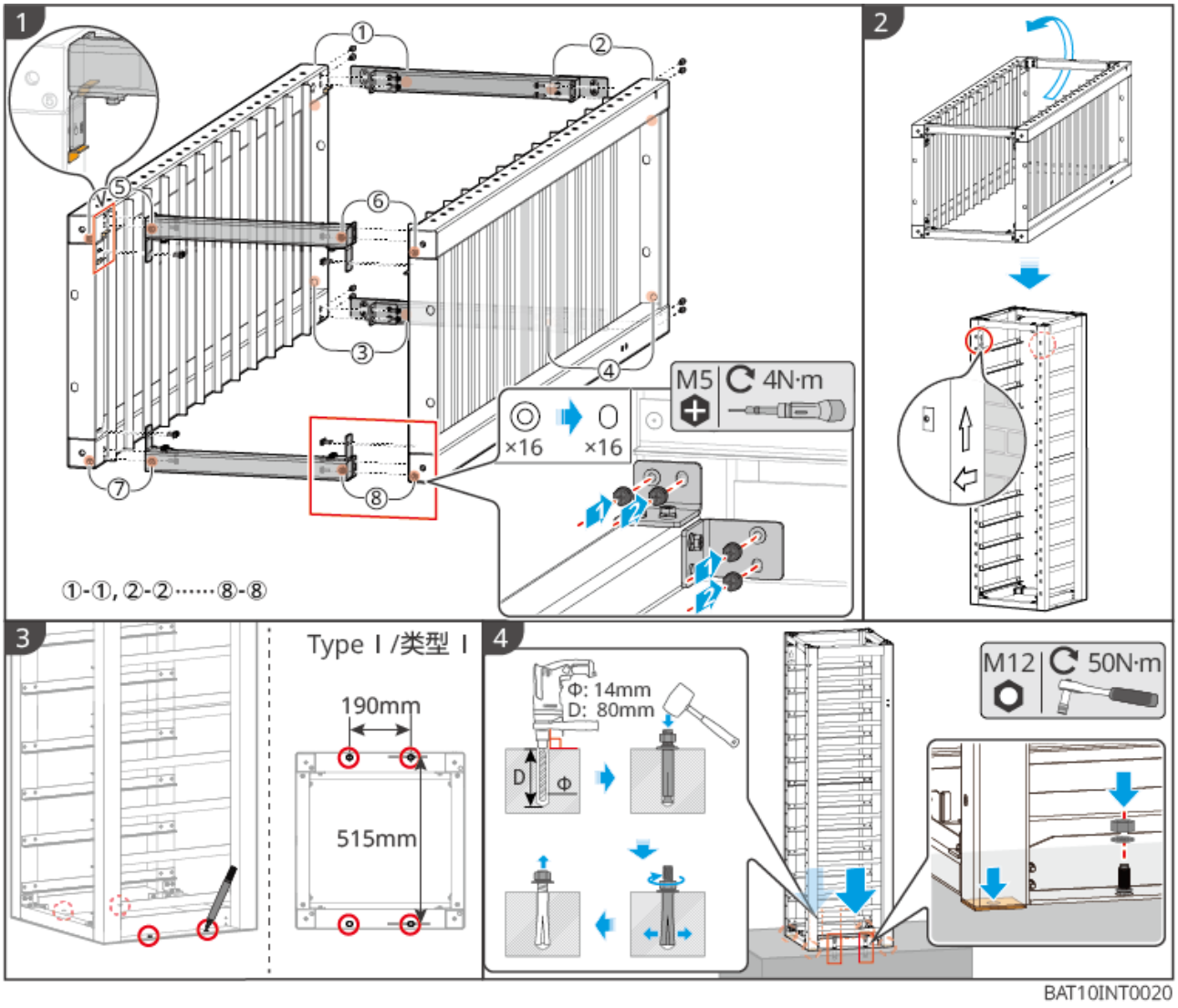
1
①-①, ②-②……⑧-⑧
M5 4N·m
×16 ×16
2
3
Type I /类型 I
190mm
515mm
4
Φ: 14mm
D: 80mm
M12 50N·m
BAT10INT0020

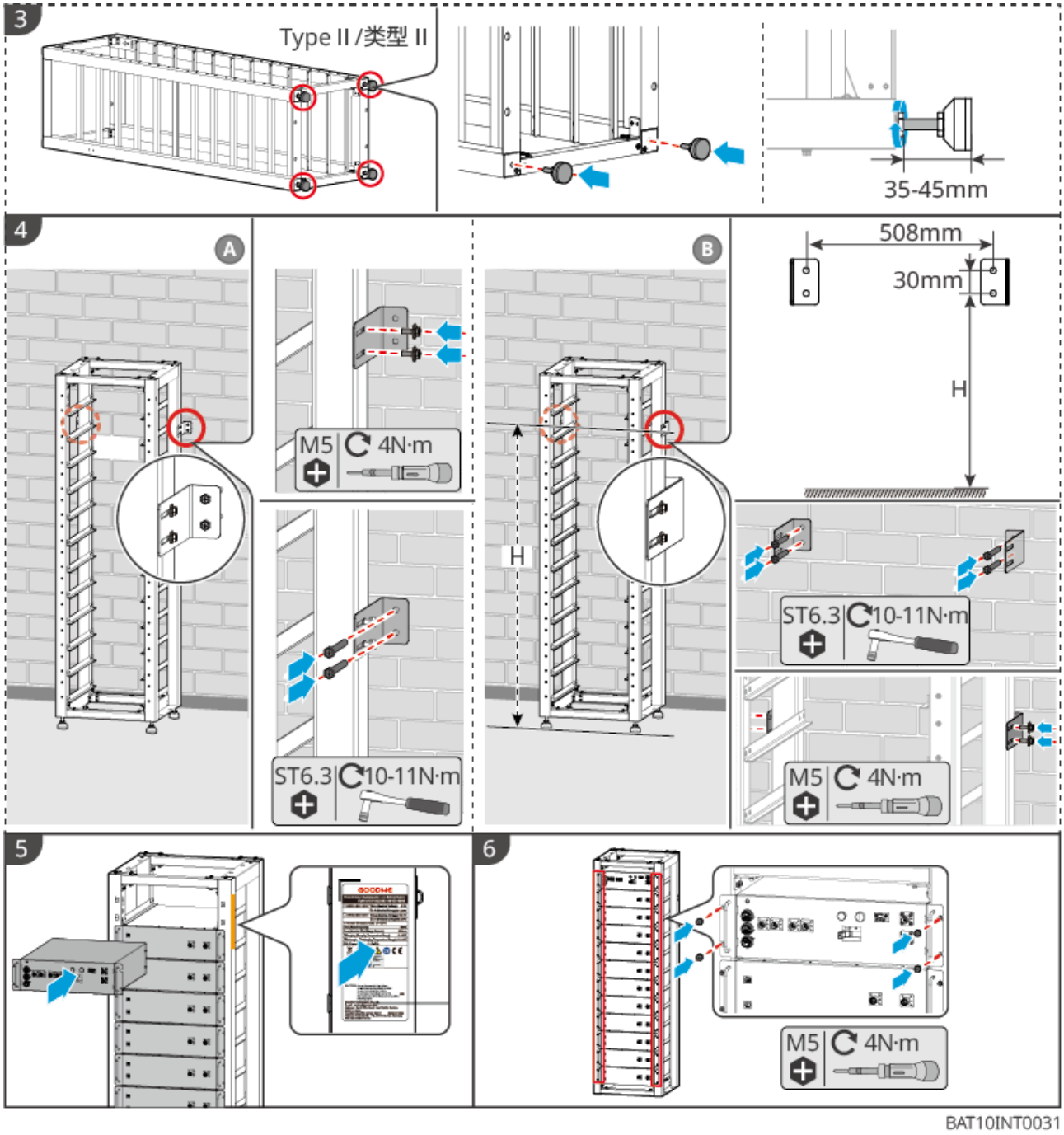

6.5.4 Installing the BAT Series 61.4–112.6 Kwh Commercial and Industrial Battery System

Step 1: Secure the battery system to the foundation.

1. Mark the drilling positions according to the dimensions shown.
2. Drill holes with an impact drill and install expansion bolts.

3. Move the battery rack to the hole positions and secure the battery to the foundation with expansion bolts.

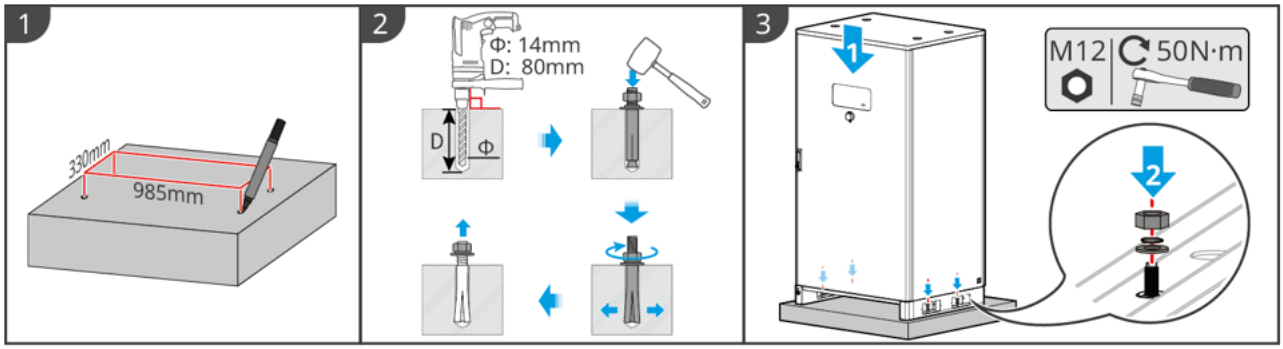

BAT10INT0005

Step 2: Remove the Protection covers from the smoke and heat alarms. When the battery is shipped, the smoke detector and temperature sensor alarms have Protection covers installed; the covers must be removed for the alarms to function properly.



BAT10INT0016

Step 3: Install the air conditioner drain pipe.

1. Install the air conditioner drain pipe connector.
2. Secure the air conditioner drain pipe to the connector.

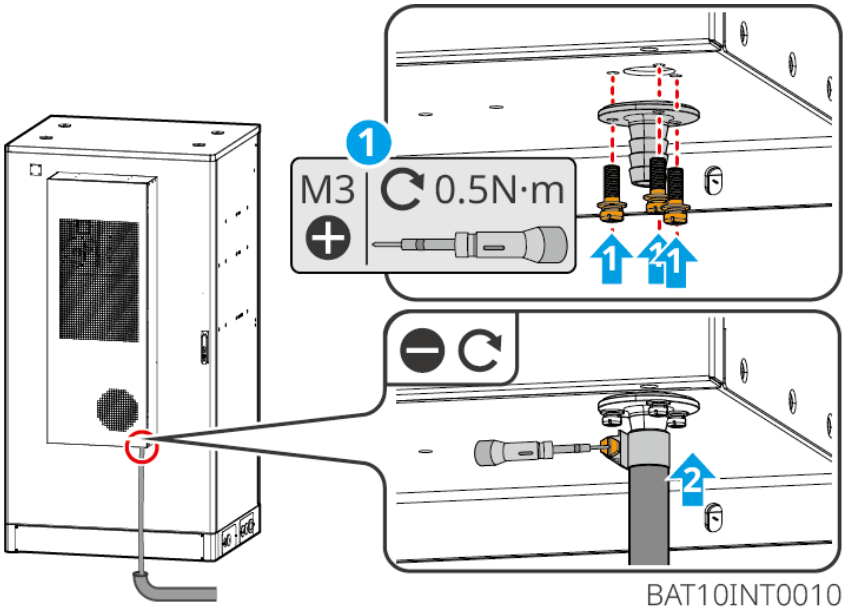

BAT10INT0010

6.6 Install the Meter

⚠WARNING

In areas with lightning hazards, if the meter cable length exceeds 10 m and the cable is not routed in grounded metal conduit, it is recommended to install external lightning protection devices.

GM3000

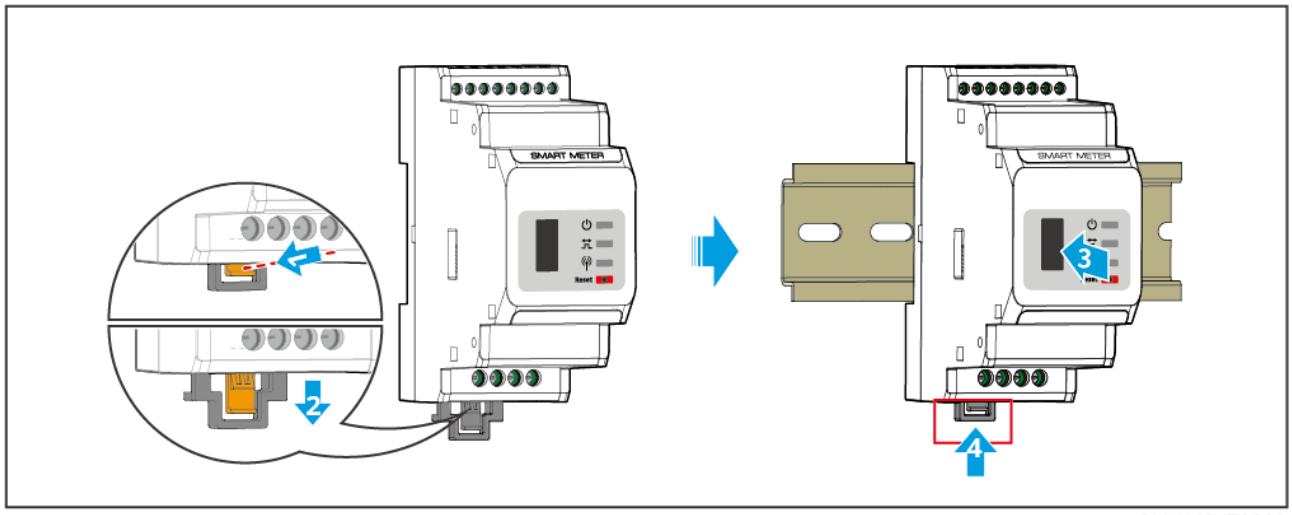

GMK10INT0002

GM330&GMK330

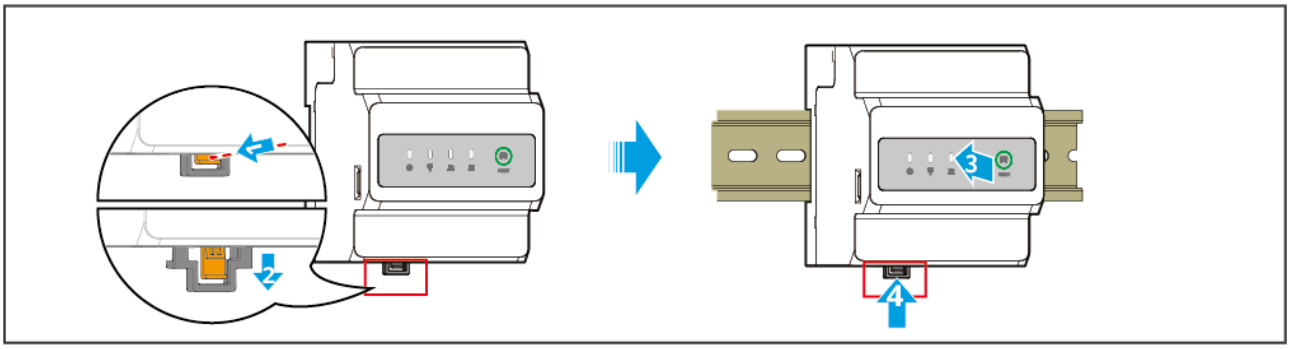

GMK10INT0003

7 System Wiring

⚠DANGER

- The laying, routing, and connection of cables must comply with local laws, regulations, and standards.
- All operations during electrical connection and the specifications of cables and components used must comply with local legal and regulatory requirements.
- Before making electrical connections, disconnect the equipment's DC Switch and AC output switch to ensure that the equipment is powered off. Live-line operation is strictly prohibited; otherwise, hazards such as electric shock may occur.
- Cables of the same type should be bundled together and routed separately from cables of different types. Entangling or crossing each other is prohibited.
- If cables are subjected to excessive tensile force, poor connections may result. During wiring, reserve a certain length of cable before connecting it to the inverter wiring terminals.
- When crimping the terminals, ensure that the cable conductor is in full contact with the terminal. Do not crimp the cable insulation together with the terminal; otherwise, the equipment may fail to operate, or after operation, unreliable connections may cause heating and damage to the inverter terminal block.
- For unused cable glands and ports (including communication ports), use the dedicated terminals or plugs supplied in the accessory box to seal them reliably. Otherwise, the following risks may occur:
  - Electric shock hazard: Open electrical ports may allow personnel to directly contact live parts, causing electric shock accidents.
  - Protection failure: Open ports may allow dust, moisture, or foreign objects to enter, potentially causing short circuits, fire, or equipment failure.

NOTE

- When making electrical connections, wear personal protective equipment such as safety shoes, protective gloves, and insulated gloves as required.
- Only professionals are permitted to perform operations related to electrical connections.
- The cable colors in the figures in this document are for reference only. Specific cable specifications must comply with local regulatory requirements.
- For parallel systems, please be sure to observe the safety precautions in the corresponding user manuals of the relevant products in the system.

7.1 System Wiring Electrical Block Diagram

NOTE

- According to regulatory requirements in different regions, the wiring methods for the N and PE wires of the inverter's ON-GRID and BACK-UP ports differ. The local regulatory requirements shall prevail.
- The inverter's ON-GRID AC port has a built-in relay. When the inverter is in off-grid mode, the built-in ON-GRID relay is open; when the inverter is in grid-connected operating mode, the built-in ON-GRID relay is closed.
- After the inverter is powered on, the BACK-UP AC port is live. If maintenance is required for BACK-UP loads, power off the inverter; otherwise, electric shock may result.

N and PE wires are connected together in the distribution box.

NOTE

- To maintain neutral integrity, the neutral wires on the grid-connected side and the off-grid side must be connected together; otherwise, the off-grid function cannot be used normally.
- The following figure shows the schematic of the power grid system for Australia, New Zealand, and other regions:

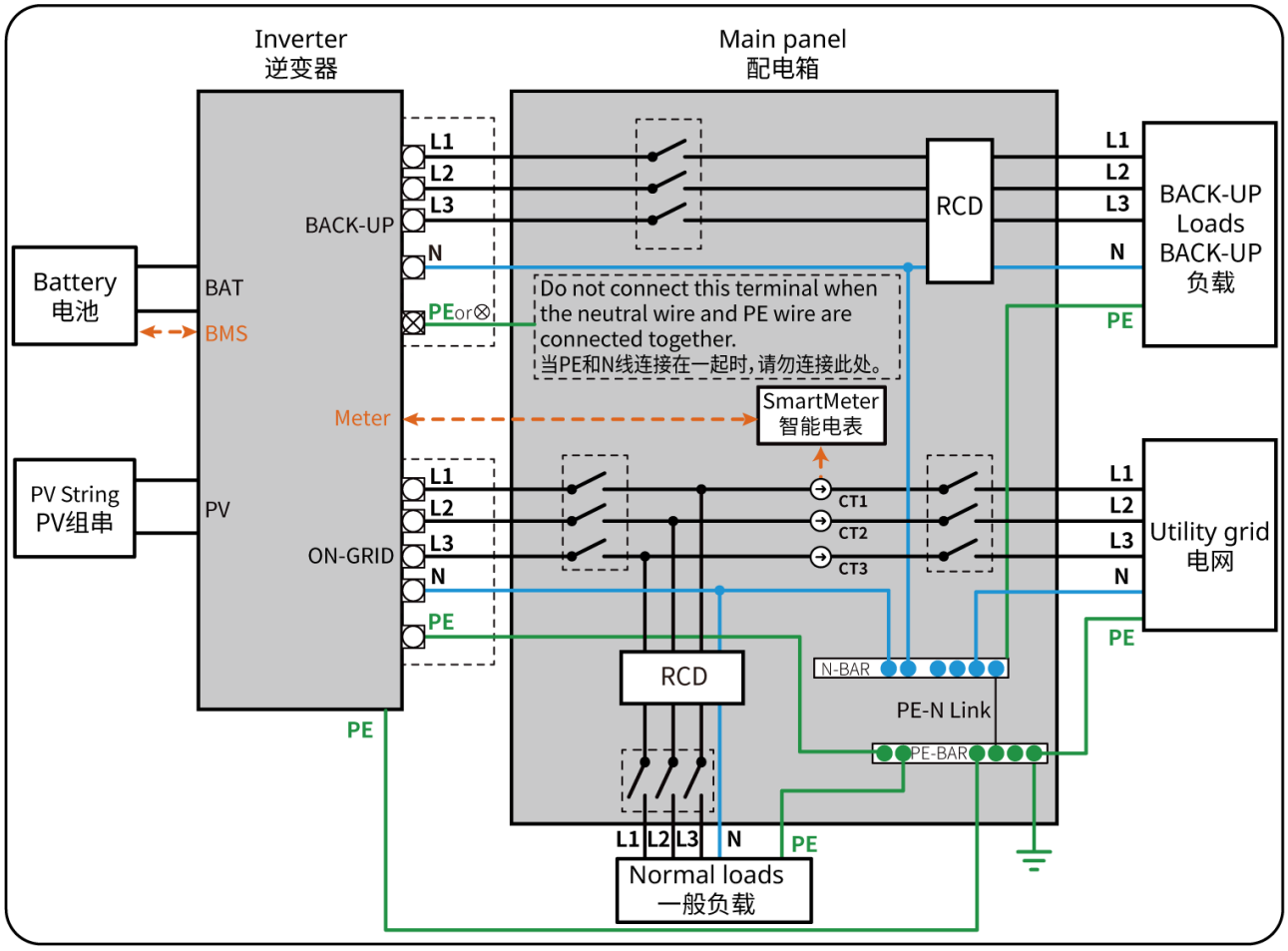

ET3010NET0015

NandPEwires are connected separately in the distribution box

NOTE

- Please ensure that the BACK-UP Protection ground wire is correctly and securely connected; otherwise, the BACK-UP function may be abnormal in the event of a grid fault.
- The following wiring method applies to regions other than Australia, New Zealand, and other such regions:

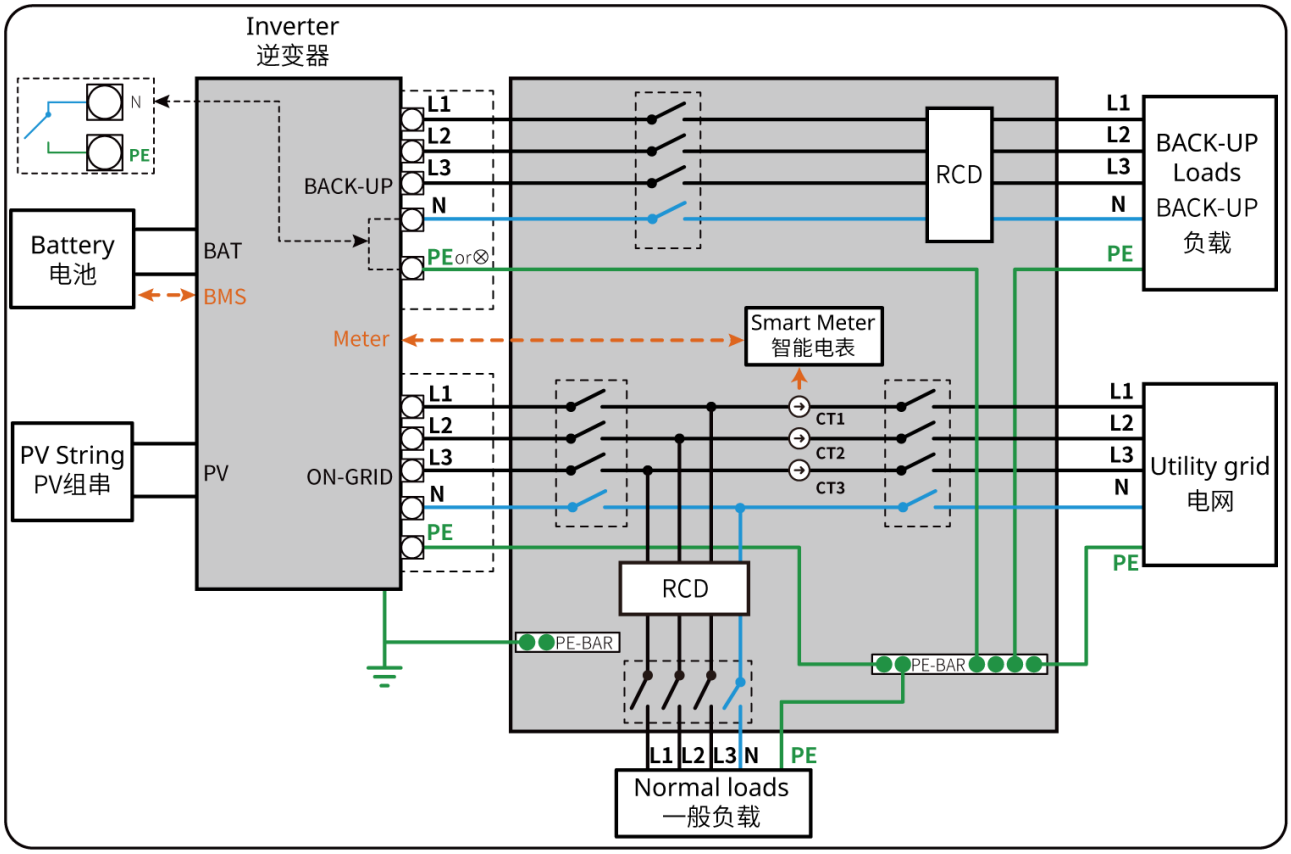

ET3010NET0016

7.2 Detailed System Wiring Diagram

When all loads in the PV system cannot consume the energy generated by the system, the surplus energy will be fed into the grid. In this case, a smart meter or CT can be used to monitor the system's Energy Generation and control the Energy Generation fed into the grid.

- Connecting a smart meter enables output power limiting and load monitoring functions.
- After connecting the smart meter, enable the "Grid Power Limit" function through the App.

The detailed system wiring diagram only illustrates wiring using some equipment models. Please refer to the corresponding wiring guidance chapter for wiring according to the equipment actually used.

NOTE

- In coupled scenarios, if grid-tied inverter generation monitoring and load monitoring functions are required, a dual-meter networking configuration is needed.
  - Meter1is used to monitor the system's grid power.
  - Meter2is used to monitor the power generation of the grid-tied inverter.
  - By integrating Meter1and Meter2data, the monitoring platform can realize real-time monitoring of load power consumption.
- If the grid-tied inverter needs output power limiting, connect a meter orCTand other devices separately.

Dual-meter scenario	
Meter1(grid side)	Meter2(AC side of grid-tied inverter)
GM3000	GM3000
GM3000	GM330
GM3000	GMK330
GM330	GM330
GM330	GM3000
GM330	GMK330
GMK330	GMK330
GMK330	GM3000
GMK330	GM330

Wiring diagram with Protection cover (Australia only)

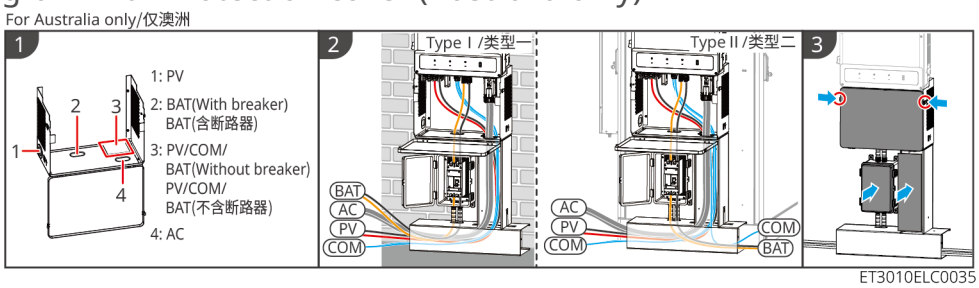

7.2.1 Single-Unit System Wiring Detail Drawing

General scenario

Scenario with GM3000

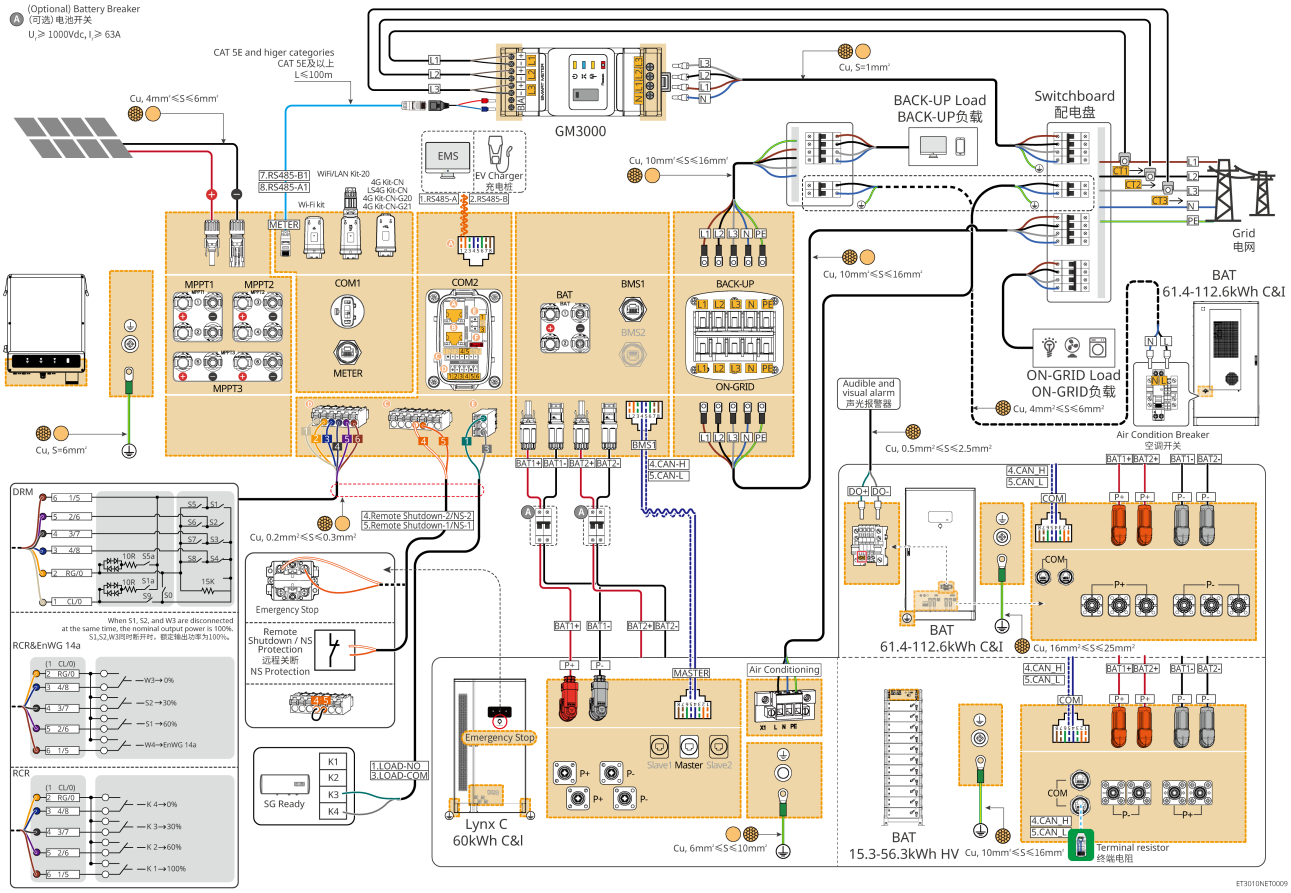

Scenario with GM330

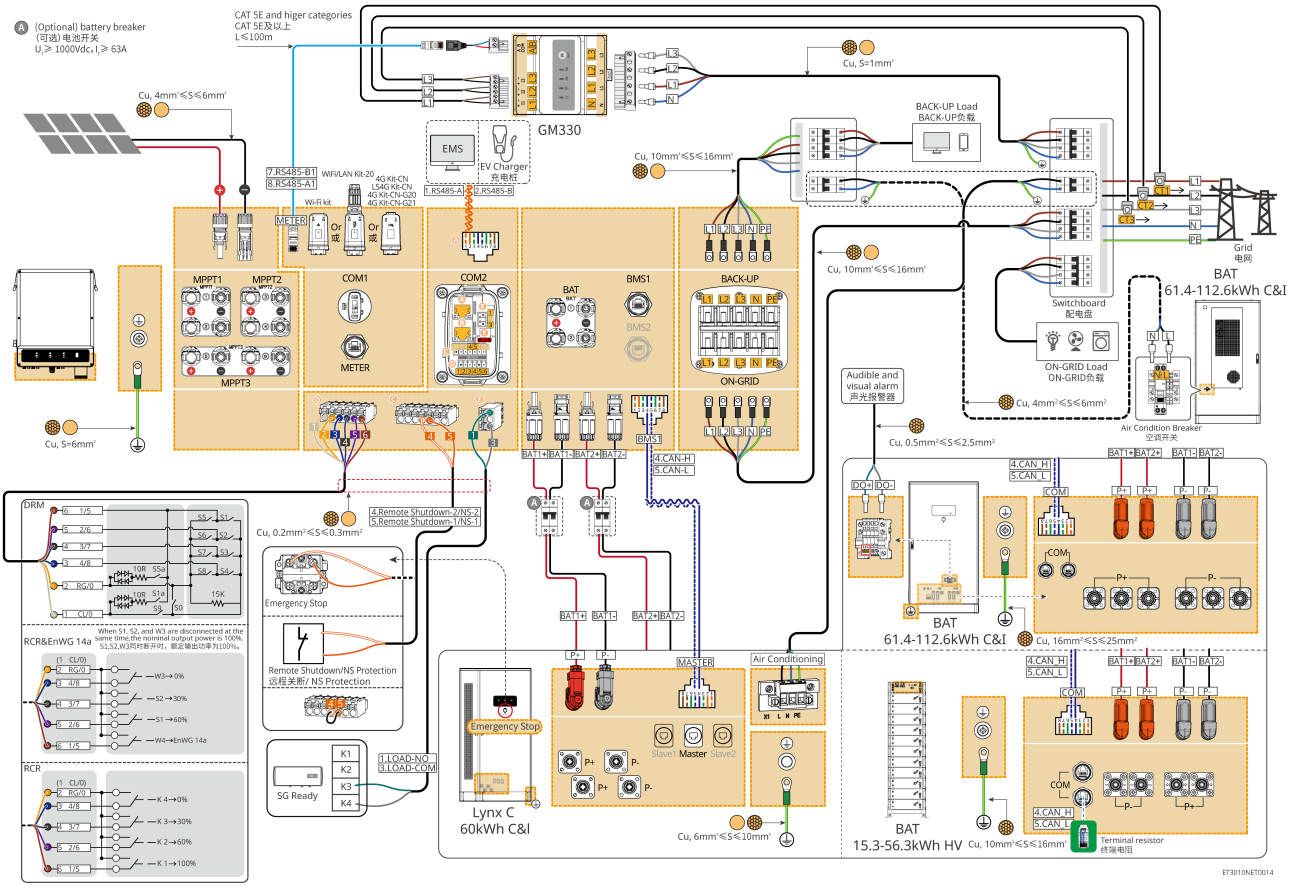

Scenario with GMK330

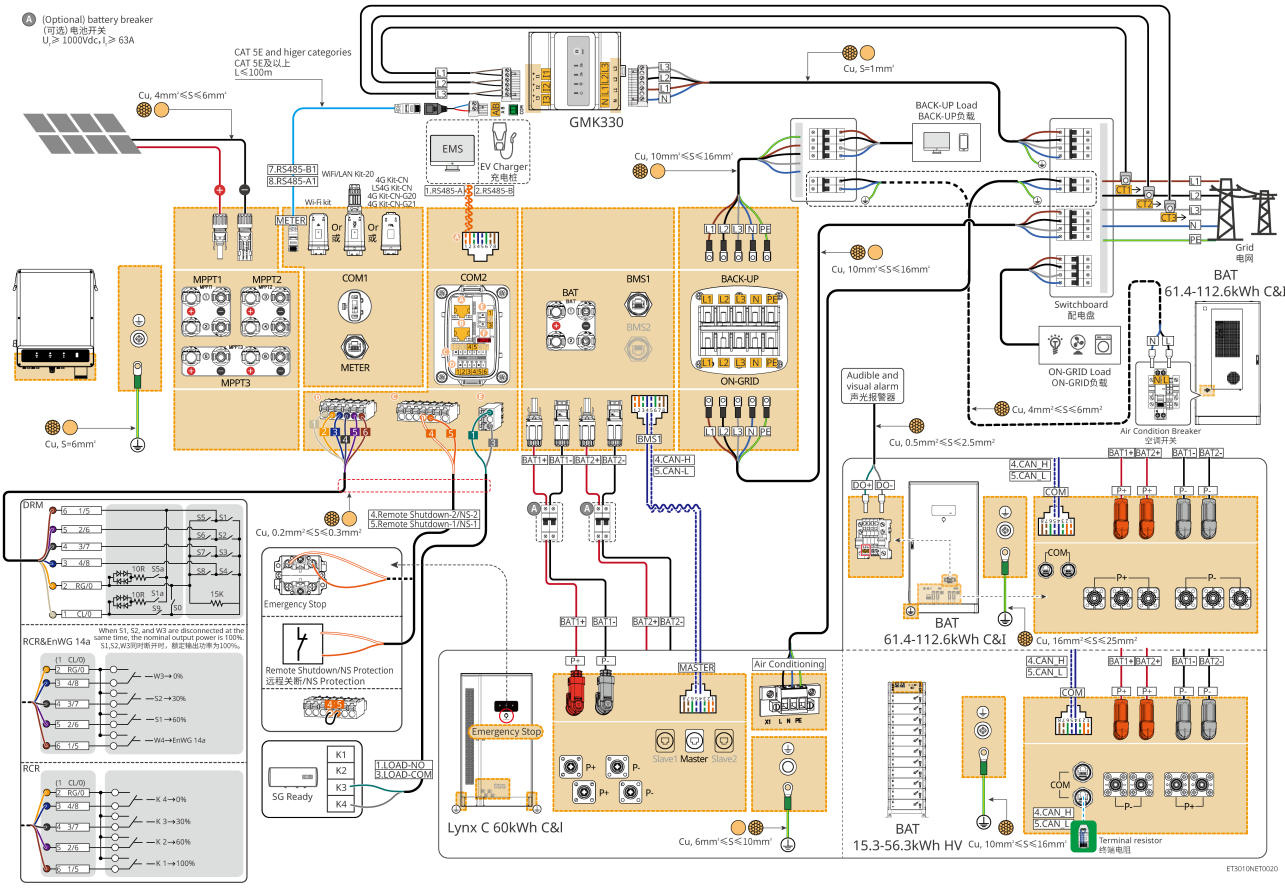

Networking solution for load monitoring and grid-tied inverter generation monitoring in coupled scenarios

In a coupled scenario, if output power limitation is required for the grid-tied inverter, please connect devices such as a meter or CT separately.

GM330Meter+GM330Meter

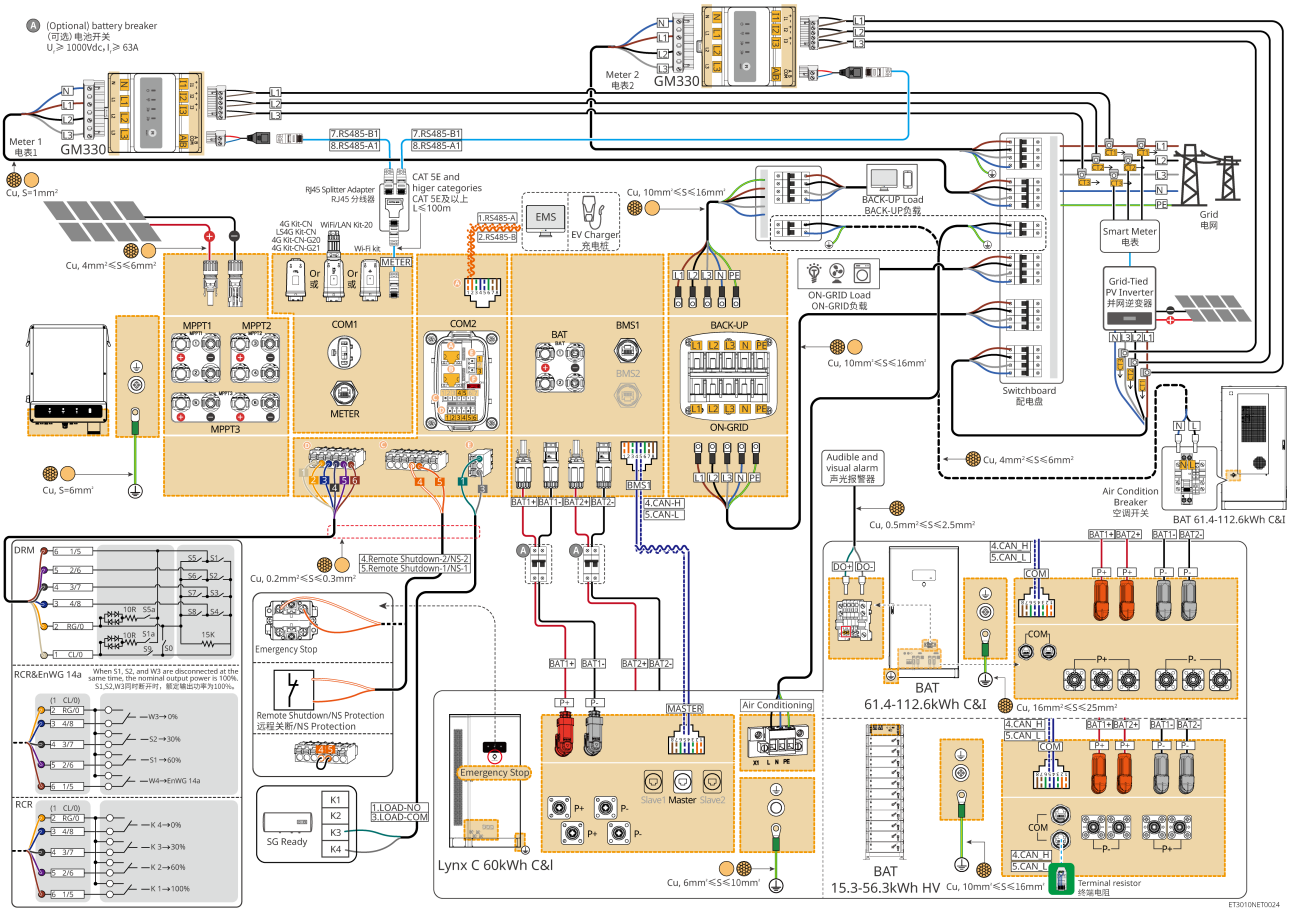

GMK330Meter+GMK330Meter

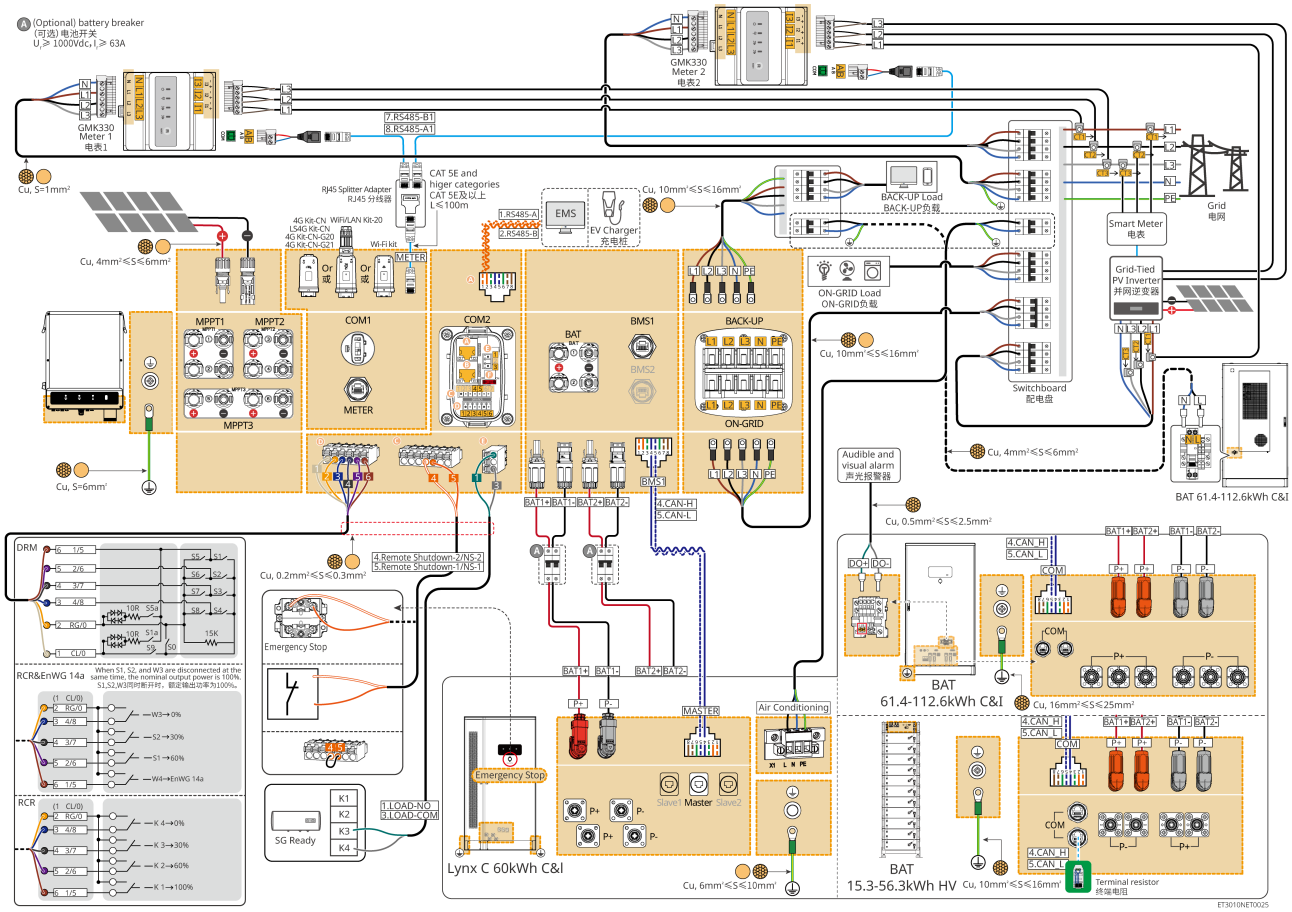

EzManager3000 networking solution

EzManager3000+GM330 or GMK330networking

- If it is necessary to connectDREDdevices,RCRdevices, Remote Shutdown devices,NS Protection、SG Readyheat pumps, etc. in the system, please connect them to EzManager3000.

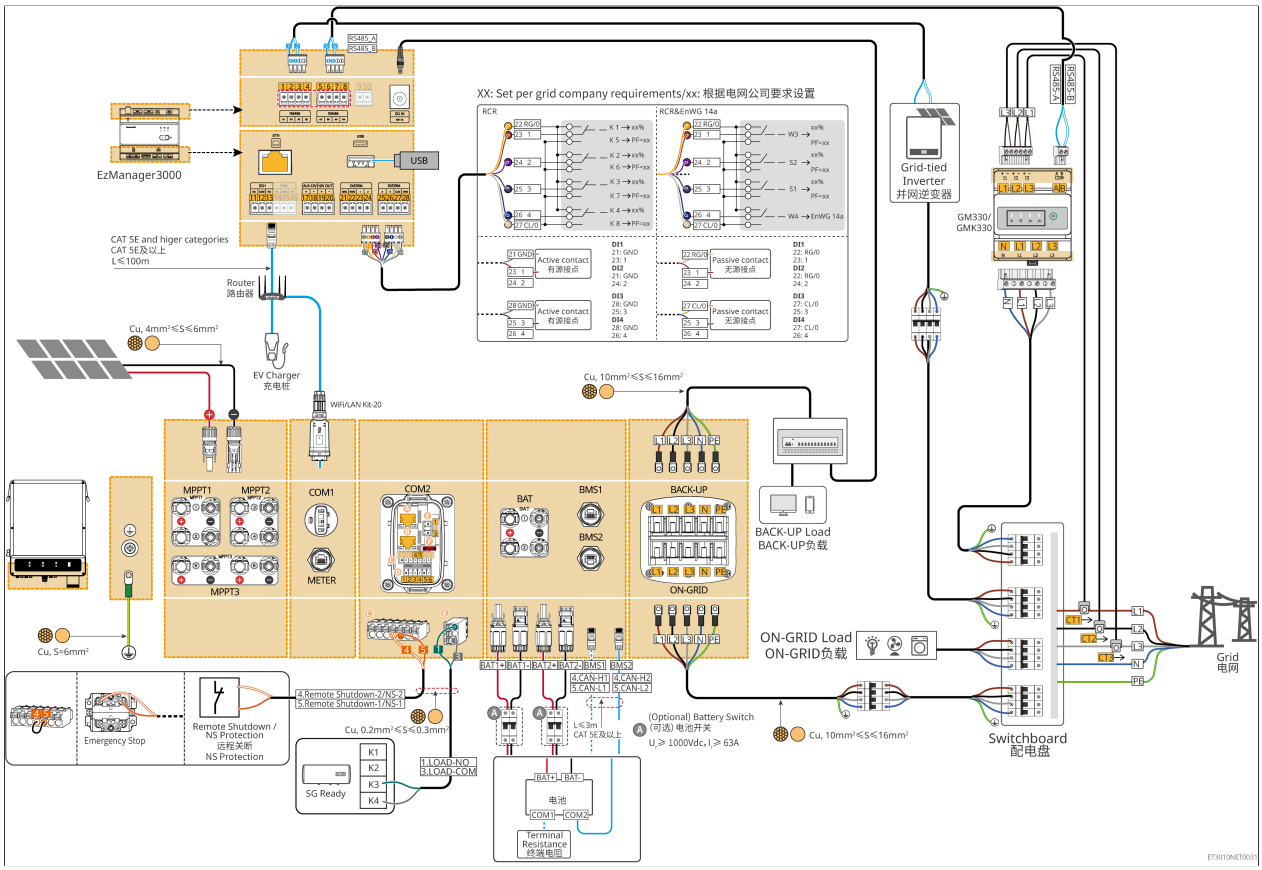

7.2.2 Parallel System Wiring Detail Drawing

- In a parallel scenario, the inverter connected toEzlink3000smart communication stick and to the meter is the master inverter; the others are slave inverters. Do not connect a smart communication stick to slave inverters in the system.
- Parallel Operation Scenarios Using EzManager3000:
  - Each inverter must use a WiFi/LAN Kit-20 to connect to the router, and the router must then connect to the EzManager3000.
  - If it is necessary to connectRCRequipment, please connect it to EzManager3000; Remote Shutdown devices,NS Protection、SG Readyheat pumps must be connected to each inverter.
- The following figures focus on the wiring related to parallel connection. For the wiring requirements of other ports, refer to the single-machine system.

Combined withGM3000scenario

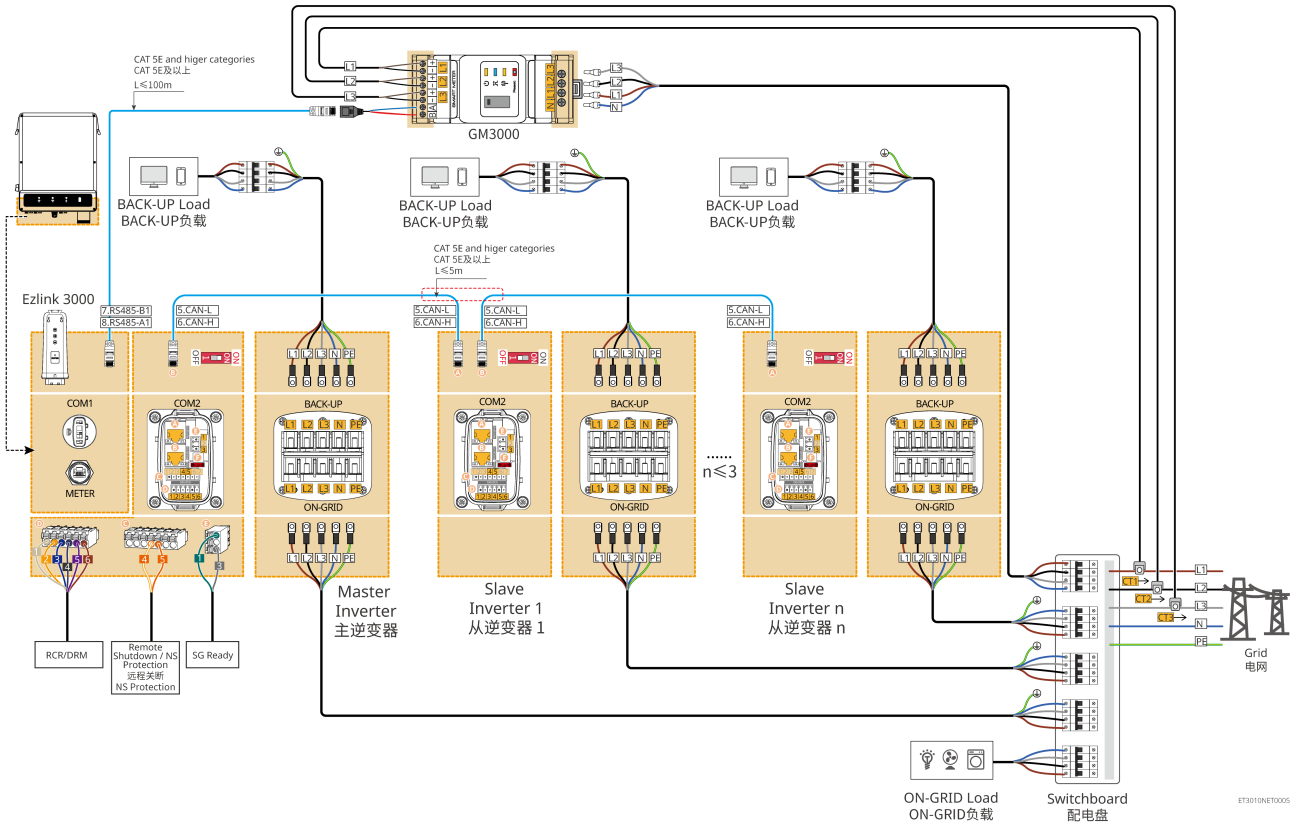

Combined withGM330scenario

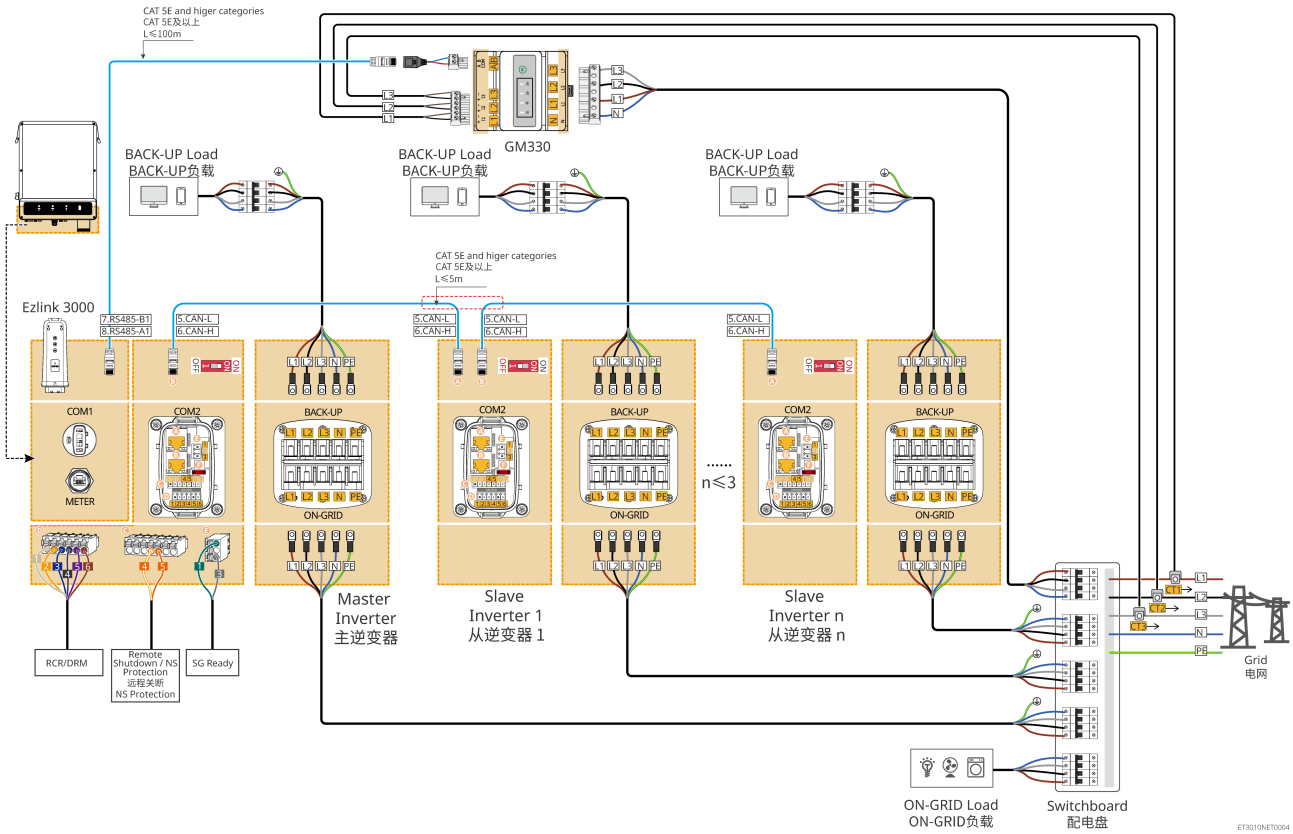

Combined withGMK330scenario

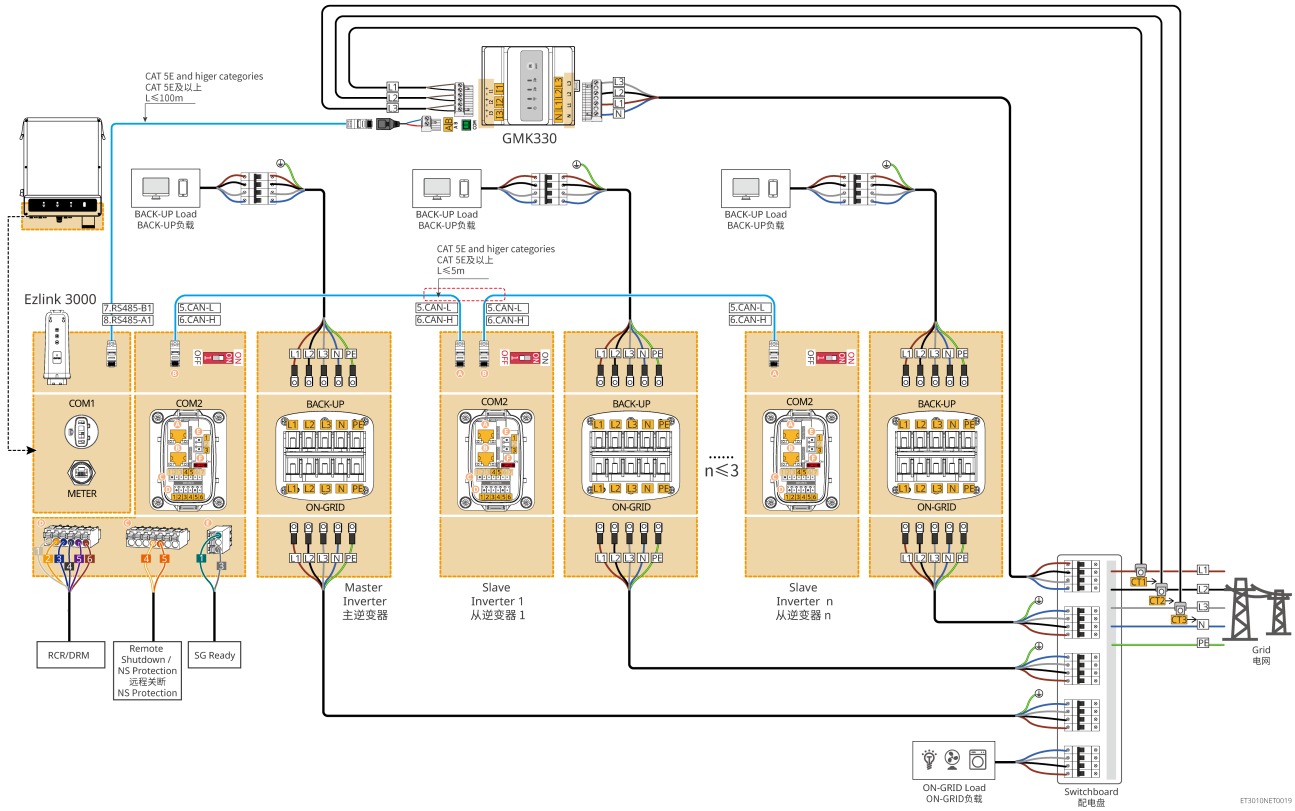

Networking solution for load monitoring and grid-tied inverter generation monitoring in coupled scenarios

GMK330Meter+GMK330Meter

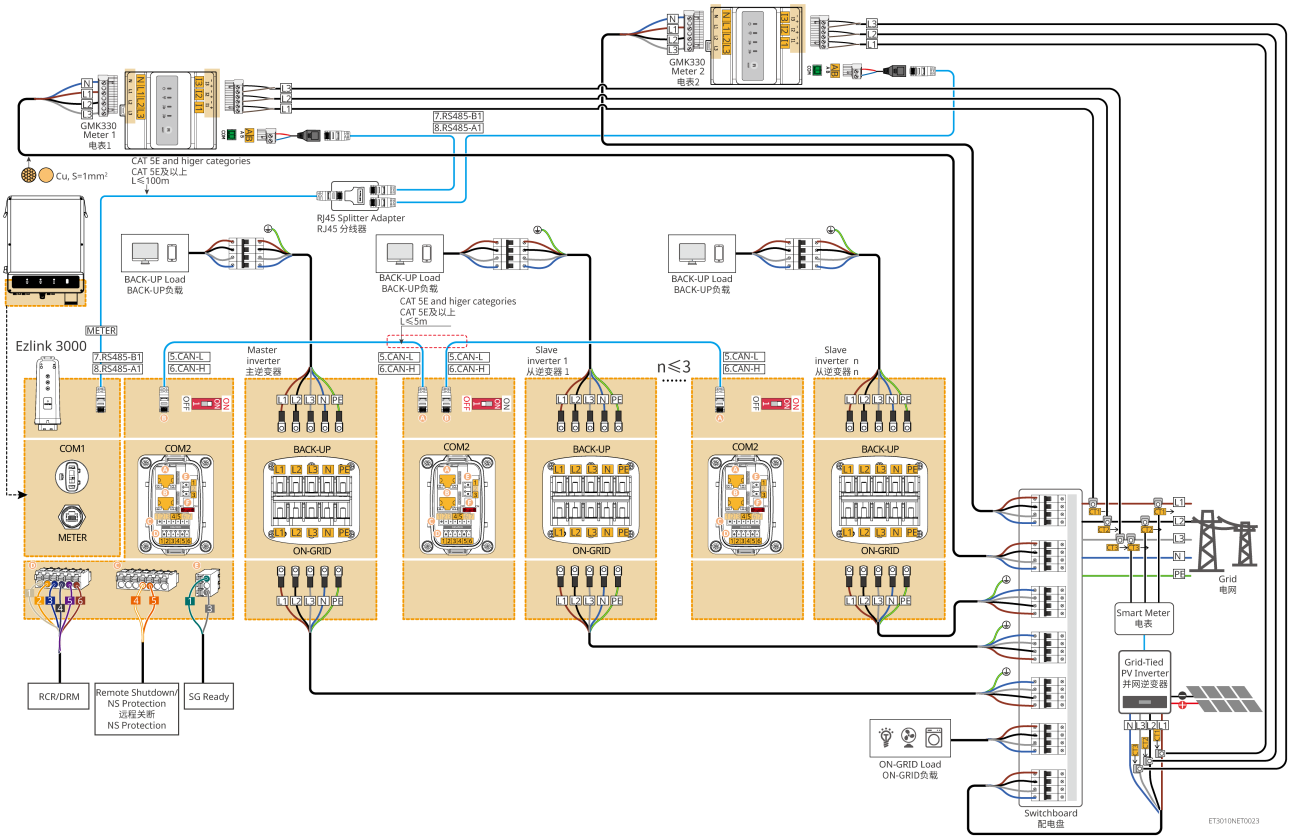

EzManager3000 networking solution

EzManager3000+GM330 or GMK330networking

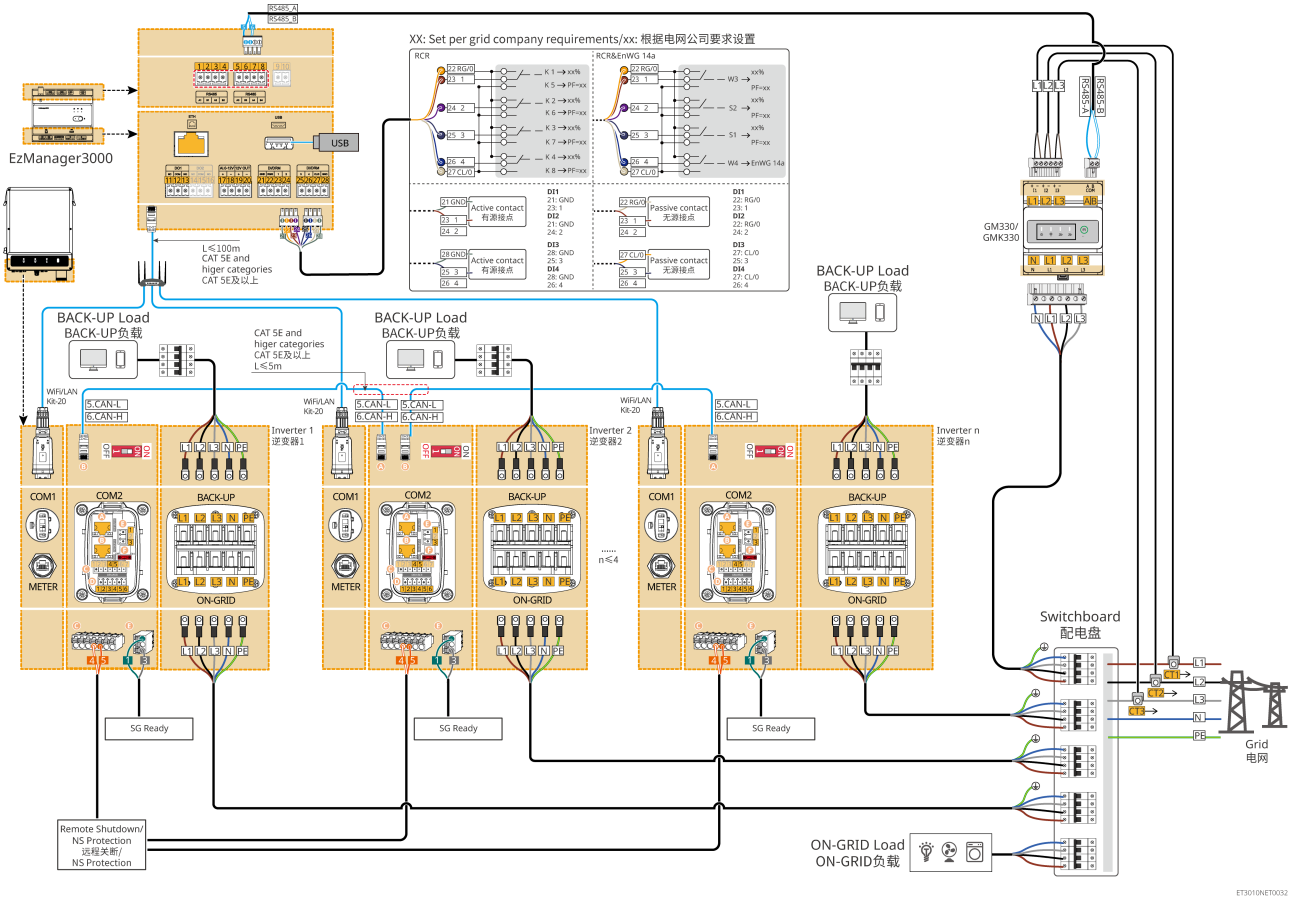

7.3 Material Preparation

⚠WARNING

- Do not connect loads between the inverter and the AC Switch directly connected to the inverter.
- Each inverter must be equipped with one AC output circuit breaker; multiple inverters must not be connected to the same AC circuit breaker at the same time.
- To ensure that the inverter can be safely disconnected from the grid in the event of an abnormality, connect an AC circuit breaker on the AC side of the inverter. Select an appropriate AC circuit breaker in accordance with local regulations.
- After the inverter is powered on, the BACK-UP AC port is live. If maintenance is required for BACK-UP loads, power off the inverter; otherwise, electric shock may result.
- For cables used in the same system, it is recommended that the conductor material, cross-sectional area, length, and other parameters be consistent.
  - BACK-UP AC cable of each inverter
  - ON-GRID AC cable of each inverter
  - Power cable between the inverter and the battery
  - Power cable between batteries
- The system supports connecting a generator via an ATS switch only in single-machine scenarios to switch between grid and generator supply. TheATS switch is connected to the grid by default.

7.3.1 Switch Preparation

No.	Circuit breaker	Recommended Specifications	How to Obtain	Remarks
1	ON-GRIDCircuit breaker	BACK-UPport is no-load; the Rated Current requirements are as follows: • GW15K-ET: Rated Current≥32A; Nominal Voltage≥400V • GW20K-ET: Rated Current≥40A; Nominal Voltage≥400V • GW25K-ET: Rated Current≥50A; Nominal Voltage≥400V • GW29.9K-ET、GW30K-ET: Rated Current≥63A; Nominal Voltage≥400V • GW12KL-ET: Rated Current≥50A; Nominal Voltage≥230V • GW18KL-ET: Rated Current≥63A; Nominal Voltage≥230V	Customer-supplied	If the inverter BACK-UPport is not used, select an appropriate circuit breaker according to theACMax. Current to Grid.
		BACK-UPport carries a load, the Rated Current requirements are as follows: • GW15K-ET: Rated Current≥50A; Nominal Voltage≥400V • GW20K-ET、GW25K-ET、GW29.9K-ET、GW30K-ET: Rated Current≥63A; Nominal Voltage≥400V • GW12KL-ET、GW18KL-ET: Rated Current≥63A; Nominal Voltage≥230V		

No.	Circuit breaker	Recommended Specifications	How to Obtain	Remarks
2	BACK-UPCircuit breaker	Nominal Voltage≥400V, and the Rated Current requirements are as follows: • GW15K-ET: Rated Current≥32A; Nominal Voltage≥400V • GW20K-ET: Rated Current≥40A; Nominal Voltage≥400V • GW25K-ET: Rated Current≥50A; Nominal Voltage≥400V • GW29.9K-ET、GW30K-ET: Rated Current≥63A; Nominal Voltage≥400V • GW12KL-ET: Rated Current≥40A; Nominal Voltage≥230V • GW18KL-ET: Rated Current≥63A; Nominal Voltage≥230V	Customer-supplied	-
3	ATS Switch	For the same model, the ATS switch and ON-GRID circuit breaker must have the same specifications. Specification requirements (recommended): • GW15K-ET: Rated Current≥32A; • GW20K-ET: Rated Current≥40A; • GW25K-ET: Rated Current≥50A; • GW29.9K-ET、GW30K-ET: Rated Current≥63A; • GW12KL-ET: Rated Current≥40A; • GW18KL-ET: Rated Current≥63A;	Customer-supplied	During actual selection, a circuit breaker complying with local installation regulations may also be selected based on the actual operating current.

No.	Circuit breaker	Recommended Specifications	How to Obtain	Remarks
4	Battery Switch	Select according to local laws and regulations • 2PDC Switch • Rated Current≥63A • Nominal Voltage≥1000V	Customer-supplied	-
5	Residual Current Protection Device	Select according to local laws and regulations • Type AA • ON-GRIDside*1：300mA • BACK-UPside:30mA	Customer-supplied	-
6	Meter Switch	• Nominal Voltage:380V/400V • Rated Current:0.5A	Customer-supplied	-

*1: The inverter has a built-in general-purpose current-sensing residual current monitoring unit. Once the leakage current exceeds the limit, the inverter will immediately disconnect from the utility grid. However, if regulations mandate an external residual current Protection device (RCD), it is recommended that the RCD be Type A with a residual operating current of not less than 300 mA (for Apparent Power below 30 kVA, 300 mA is recommended; for above 30 kVA, select according to 10 mA/kVA). An RCD with a residual operating current meeting the requirements of local regulations may also be selected. For example, in Chile, local regulations require an RCD with a residual operating current not greater than 30 mA to be installed between the inverter and the grid for inverters of 5 kVA and below. Note, however, that due to PV panels, an RCD with a smaller residual operating current is more prone to nuisance tripping under harsh conditions such as rainy weather.

7.3.2 Cable Preparation

No.	Cable	Recommended Specifications	How to Obtain
1	Inverter Protection Ground Cable	• Single-core outdoor copper cable • Conductor cross-sectional area: 6 mm^2–10 mm^2	Customer-supplied
2	Battery Protection ground cable Lynx C Series 60 Kwh Commercial and Industrial Battery System	• Single-core outdoor copper cable • Conductor cross-sectional area:6-10mm^2	Customer-supplied
	Battery Protection ground cable BAT-SSeries 15.3-56.3Kwh High-Voltage Battery	• Single-core outdoor copper cable • Conductor cross-sectional area: 10-16mm2	
	Battery Protection ground cable BAT-CSeries 61.4-112.6Kwh Commercial and Industrial Battery System	• Single-core outdoor copper cable • Conductor cross-sectional area:16-25mm2	
3	PVDC cable	• Industry-standard outdoor PV cable • Conductor cross-sectional area:4mm^2-6mm^2 • Cable outer diameter:5.9mm-8.8mm	Customer-supplied

No.	Cable	Recommended Specifications	How to Obtain
4	Battery DC cable	Terminal typeI 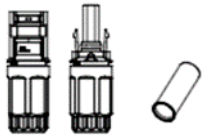 • Single-core outdoor copper cable • Conductor cross-sectional area when paired with Lynx C Series 60 kWh：16mm² • Conductor cross-sectional area when paired with other batteries: 10 mm² • Cable outer diameter:6.5mm-9.5mm	Included in the package / customer-supplied
		Terminal type II 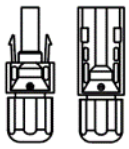 • Single-core outdoor copper cable • Conductor cross-sectional area:10mm² • Cable outer diameter:5mm-8.5mm	
5	Battery parallel-cluster power cable Lynx C Series 60Kwh Commercial and Industrial Battery System	• Single-core outdoor copper cable • Conductor cross-sectional area: 32 mm²–35 mm² • Cable outer diameter: 10 mm–12 mm	Customer-supplied

No.	Cable	Recommended Specifications	How to Obtain
	Battery parallel-cluster power cable BAT-SSeries 15.3-56.3Kwh High-Voltage Battery	• Single-core outdoor copper cable • Conductor cross-sectional area:25mm2 • Cable outer diameter:9mm-11mm	Customer-supplied
6	AC cable	• Multi-core outdoor copper conductor cable • Conductor cross-sectional area:10mm²-16mm² • Cable outer diameter:21mm-26mm	Customer-supplied
7	Smart meter power cable	Outdoor copper conductor cable Conductor cross-sectional area:1mm²	Customer-supplied
8	BatteryBMScommunication cable	-	Supplied with the box
9	MeterRS485communication cable	-	RJ45-2PIN terminal adapter cable and standard network cable, supplied with the box
10	Battery parallel cluster communication cable	CAT 5Eor higher specification standard network cable andRJ45connectors	Customer-supplied
11	Load controlDOcommunication cable	• Shielded cable meeting local standards • Conductor cross-sectional area:0.2mm²-0.3mm² • Cable outer diameter:5mm-8mm	Customer-supplied
12	Remote Shutdown communication cable		Customer-supplied
13	RCR/DREDsignal cable		Customer-supplied

No.	Cable	Recommended Specifications	How to Obtain
14	Inverter parallel communication cable	CAT 5Eor higher specification standard network cable andRJ45connectors	Customer-supplied
15	EMScommunication cable/EV charger communication cable	CAT 5Eor higher specification standard network cable andRJ45connectors	Customer-supplied
16	12Vexternal power supply	• Outdoor copper conductor cable • Conductor cross-sectional area:0.2mm²-0.3mm² • Cable outer diameter:5mm-8mm	Customer-supplied
17	Air conditioner power cable Lynx C Series 60Kwh Commercial and Industrial Battery System	-	Pre-installed
	Air conditioner power cable BAT-CSeries 61.4-112.6Kwh Commercial and Industrial Battery System	-	Supplied with the box

7.3.3 Remove the Baffle Plate

⚠WARNING

- After completing the system installation and before starting wiring, please remove the baffle plate.
- After completing system wiring, please install the baffle plate onto the enclosure.

Remove the bottom baffle plate

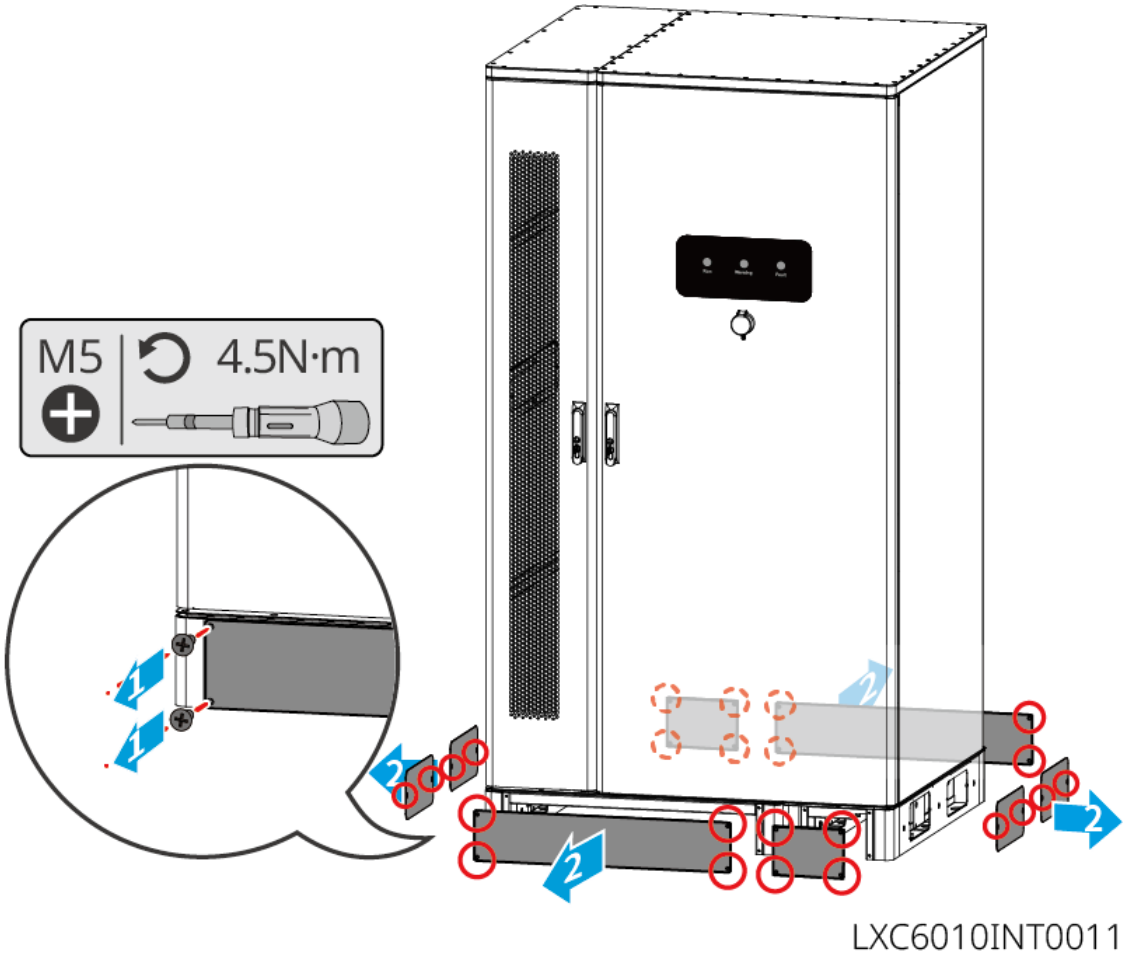

Inverter wiring area baffle plate

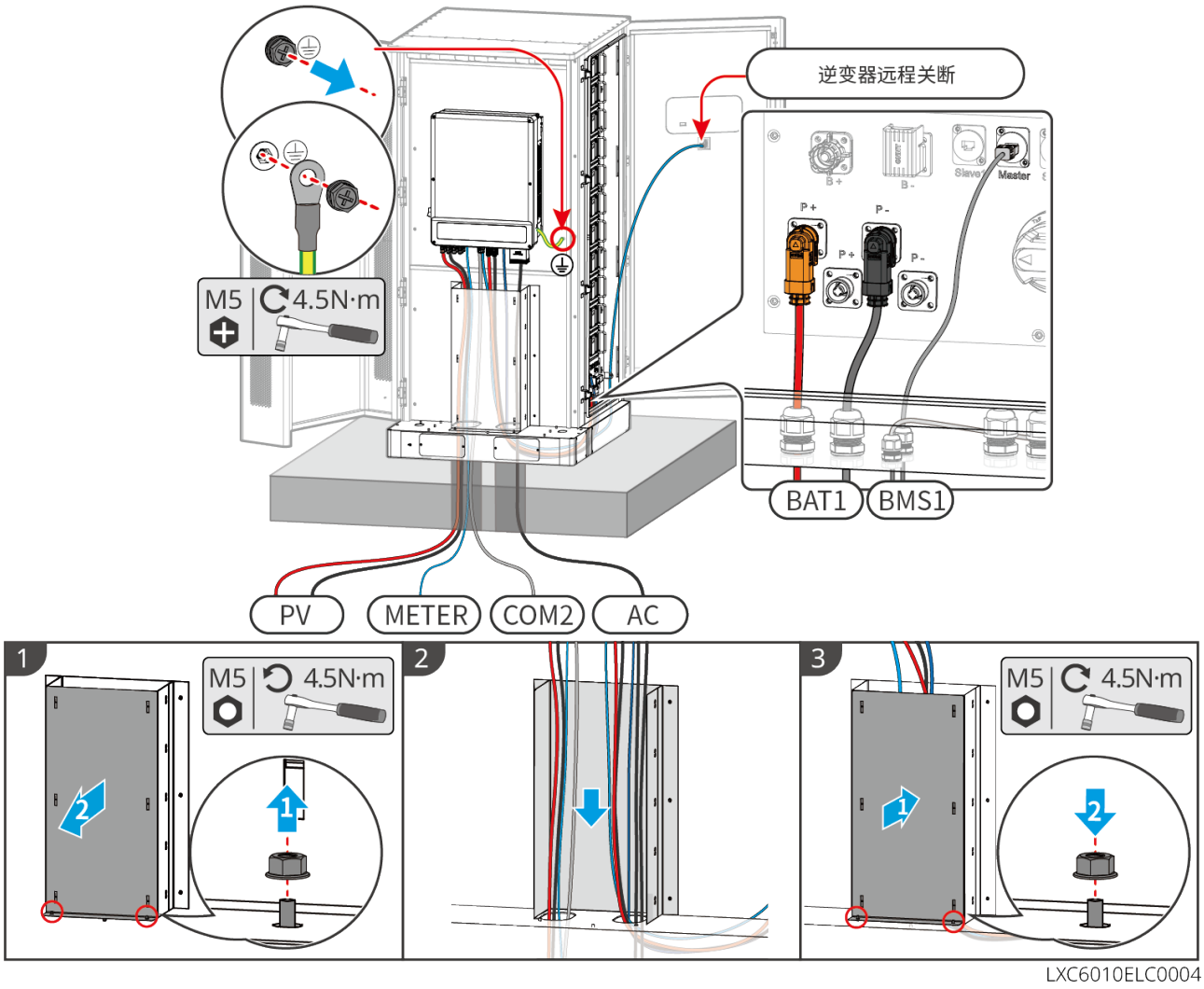

LXC6010ELC0004

7.4 Connect the Protection Ground Cable

⚠WARNING

- The Protection grounding of the enclosure cannot replace the Protection ground cable of the AC output. During wiring, ensure that the Protection ground cables at both locations are reliably connected.
- To improve the corrosion resistance of the terminal, it is recommended to apply silicone or paint to the exterior of the grounding terminal for protection after the Protection ground cable is connected and installed.
- When installing the equipment, the Protection ground cable must be installed first; when removing the equipment, the Protection ground cable must be removed last.

7.4.1 Inverter Grounding

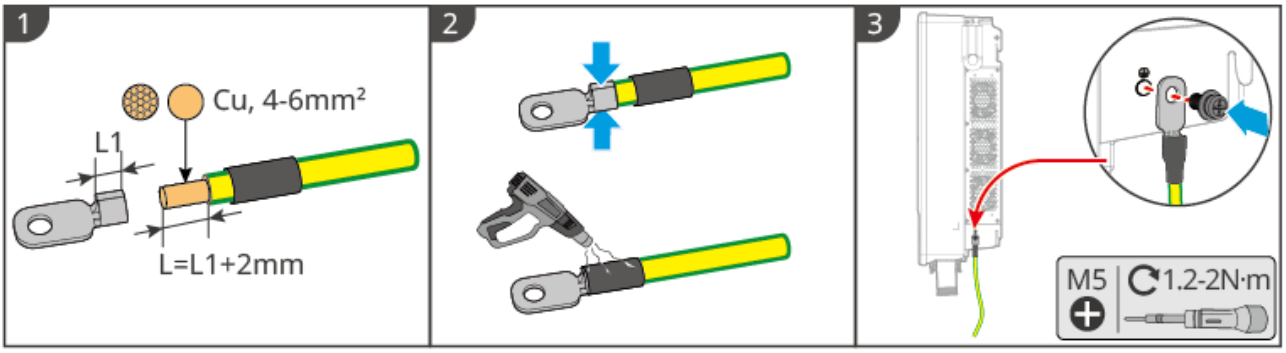

ET3010ELC0001

7.4.2 Battery System Grounding

- **Lynx C Series 60Kwh Commercial and Industrial Battery System**

Type 1

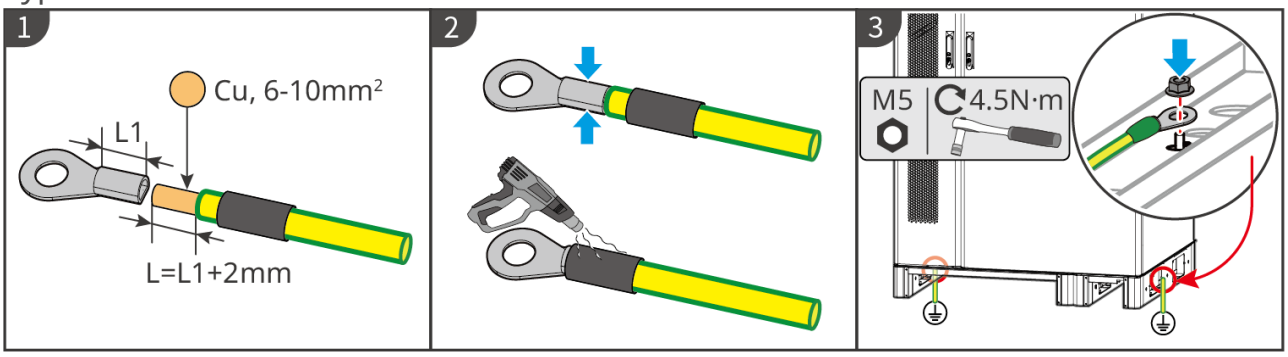

LXC6010ELC0001

Type 2

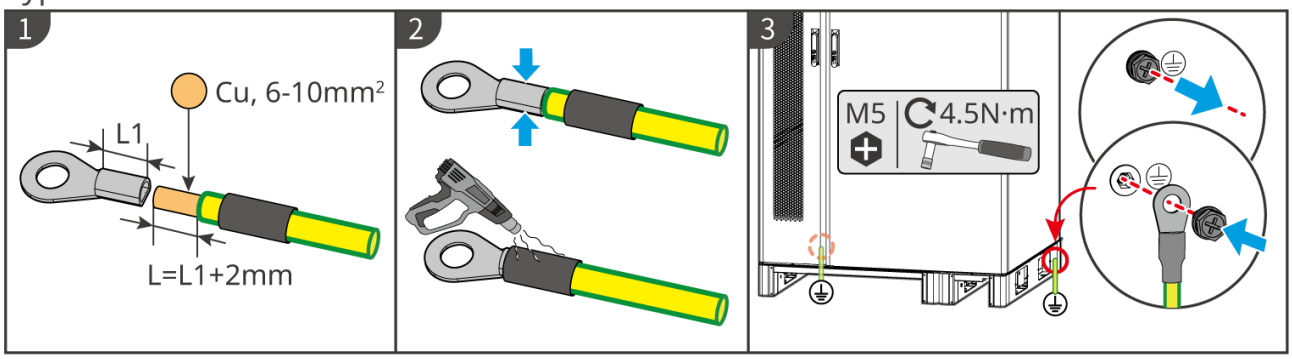

LXC6010ELC0007

- **BAT-SSeries 15.3–56.3 Kwh High-VoltageBattery**

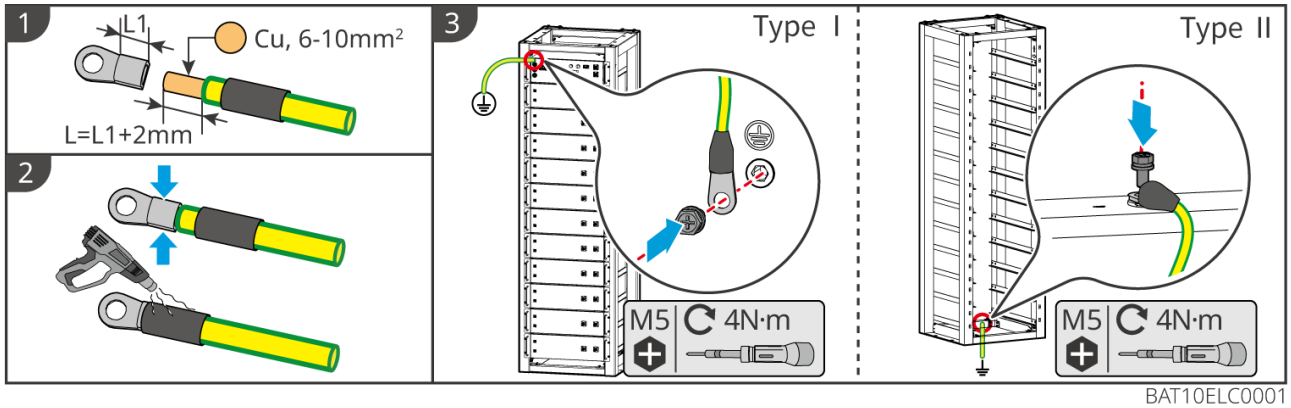

BAT10ELC0001

- **BAT-CSeries 61.4-112.6Kwh Commercial and Industrial Battery System**

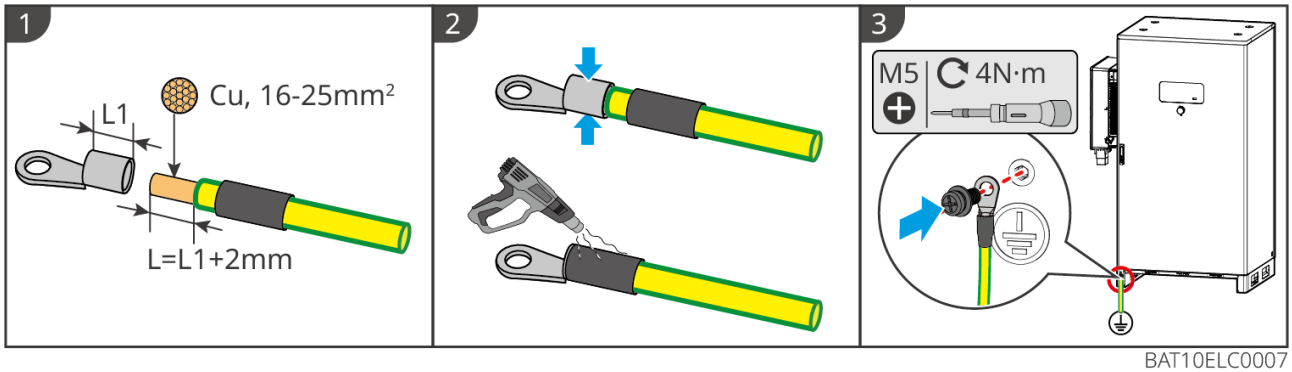

BAT10ELC0007

7.5 Connect PV Cables

⚠DANGER

- Do not connect the same PV string to multiple inverters; otherwise, the inverter may be damaged.
- Before connecting PV strings to the inverter, confirm the following information; otherwise, the inverter may be permanently damaged, and in severe cases, a fire may be caused, resulting in personal injury and property loss.
  1. Please ensure that the Max. MPPT Short Circuit Current and Max. Input Voltage of each MPPT are within the inverter's permissible range.
  2. Please ensure that the positive pole of the PV string is connected to PV+ of the inverter and the negative pole of the PV string is connected to PV- of the inverter.

⚠WARNING

- The PV string output does not support grounding. Before connecting the PV string to the inverter, please ensure that the minimum insulation resistance to ground of the PV string meets the minimum insulation impedance requirement (R = Max. Input Voltage/30mA).
- After completing the DC cable connection, please ensure that the cables are securely connected and not loose.
- Use a multimeter to measure the positive and negative poles of the DC cables to ensure correct polarity and no reverse connection, and that the voltage is within the permitted range.

NOTE

The two PV strings in each MPPT must use the same model, the same number of PV modules, and the same tilt angle and azimuth angle to ensure maximum Efficiency.

Type 1:

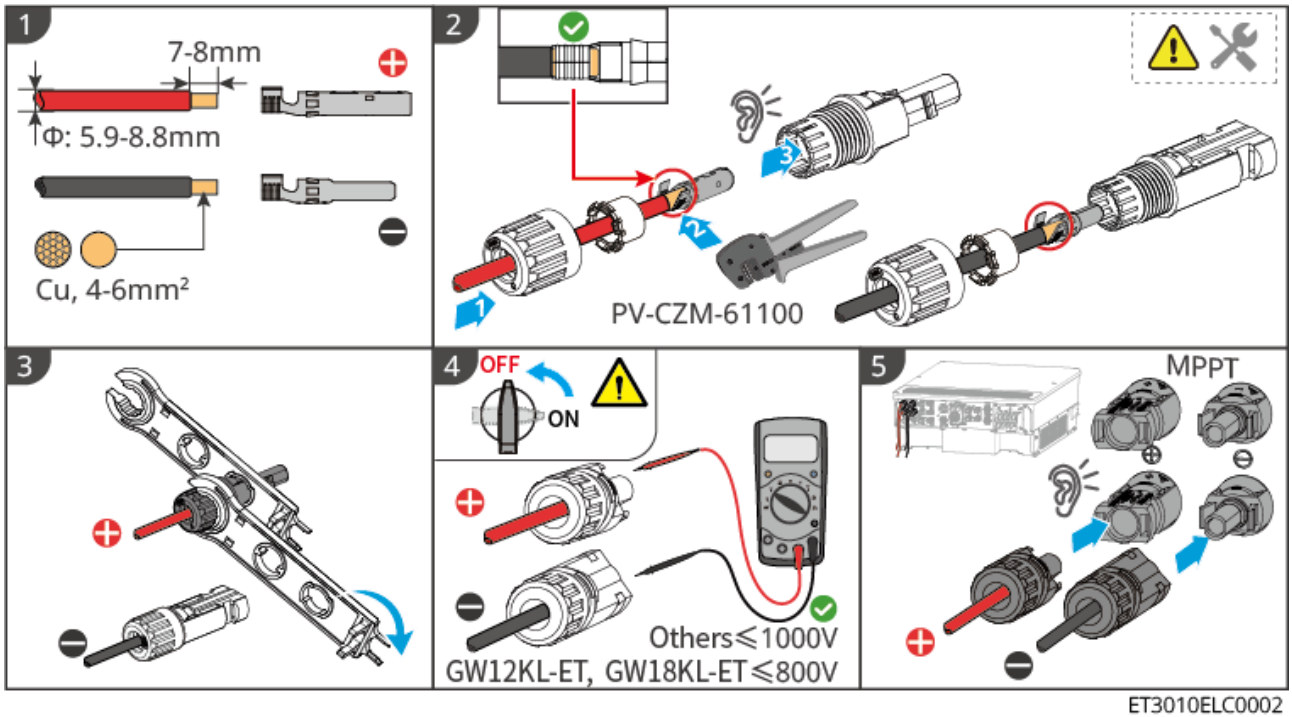

ET3010ELC0002

Type 2:

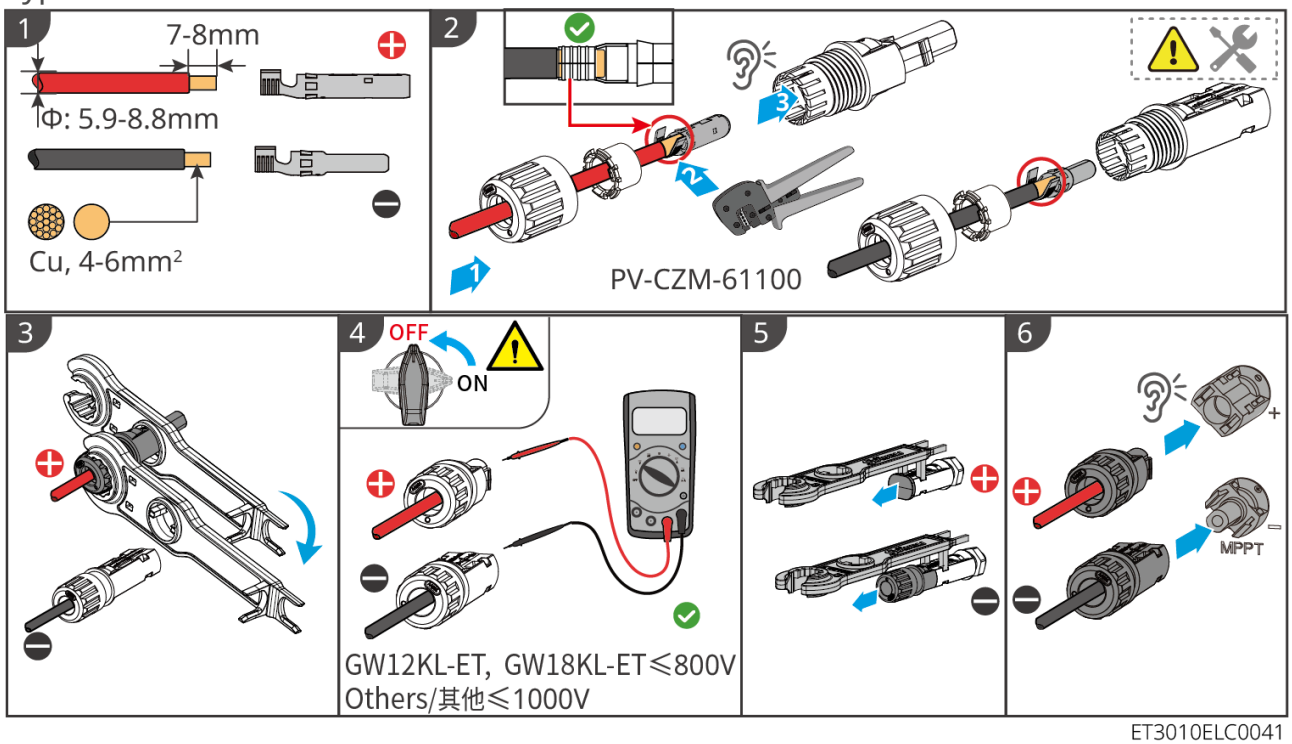

ET3010ELC0041

7.6 Connecting the Battery System Cables

⚠DANGER

- Do not connect the same Battery BANK to multiple inverters; otherwise, the inverter may be damaged.
- Do not connect loads between the inverter and the battery.
- When connecting battery cables, use insulated tools to prevent accidental electric shock or causing a Battery Short Circuit.
- Ensure that the battery open-circuit voltage is within the permissible range of the inverter.
- Before connecting battery cables, confirm that the battery modules and high-voltage box are powered off and that the battery cluster switches and DC power supply switches are all disconnected.
- Between the inverter and the battery, determine whether to configure a DC Switch according to local laws and regulations.

⚠WARNING

- Use a multimeter to measure the positive and negative poles of the DC cables to ensure correct polarity and no reverse connection, and that the voltage is within the permitted range.
- When wiring, ensure that the battery cable matches the "BAT+", "BAT-", and grounding ports of the battery terminals exactly. Incorrect cable connection will cause equipment damage.
- Please ensure that the wire core is fully inserted into the terminal wiring hole and no strands are exposed.
- Please ensure that the cables are securely connected; otherwise, during operation, the terminal block may overheat and cause equipment damage.
- Do not connect the same Battery BANK to multiple inverters; otherwise, the inverter may be damaged.

NOTE

When a 25–30 kW inverter is used with a BAT series 61.4 kWh commercial and industrial battery system, both BAT ports must be connected to achieve full-load operation.

Battery System Wiring Diagram

- Lynx C Series 60 Kwh Commercial and Industrial Battery System

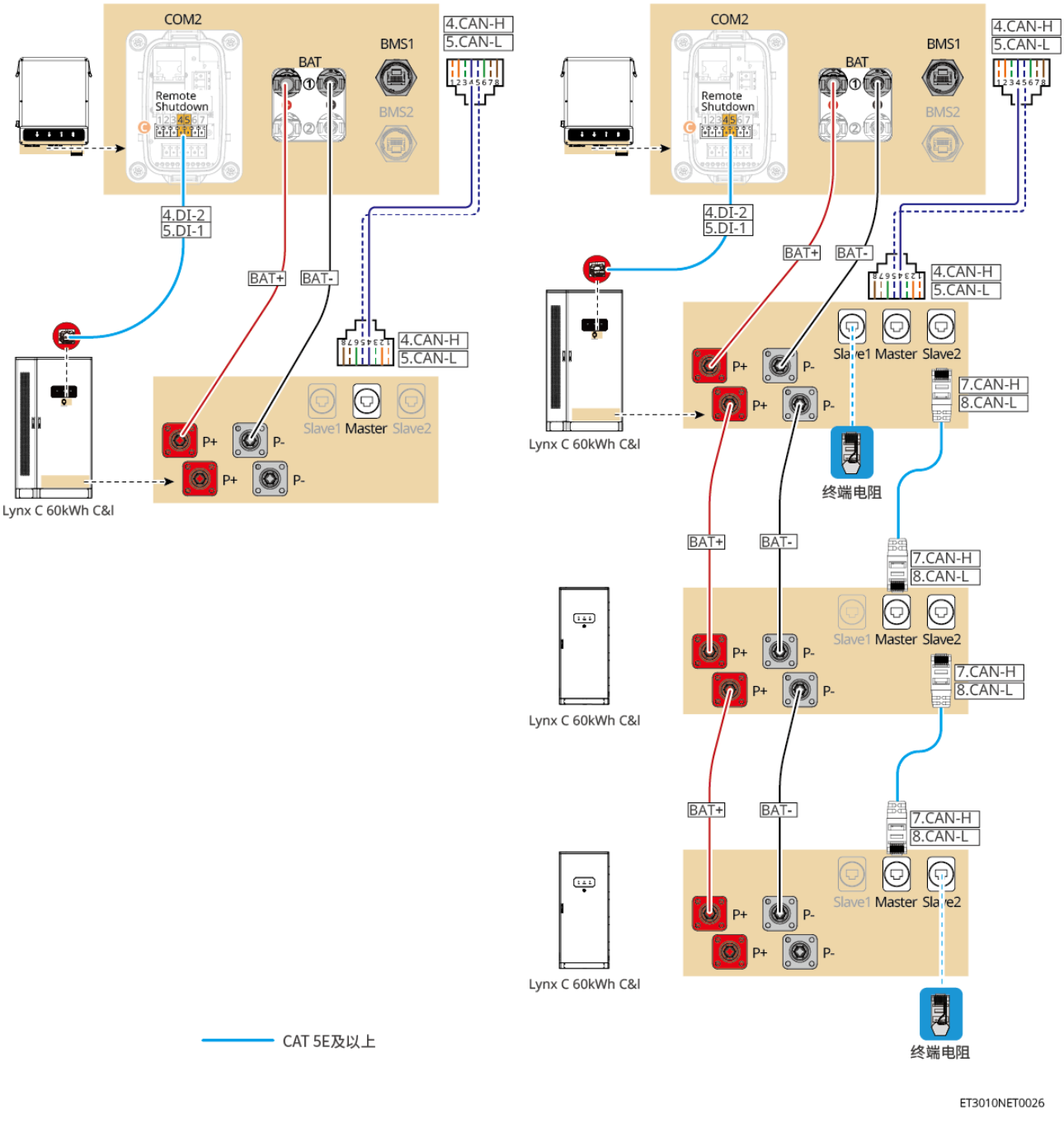

- BAT-S Series 15.3–56.3 Kwh High-Voltage Battery

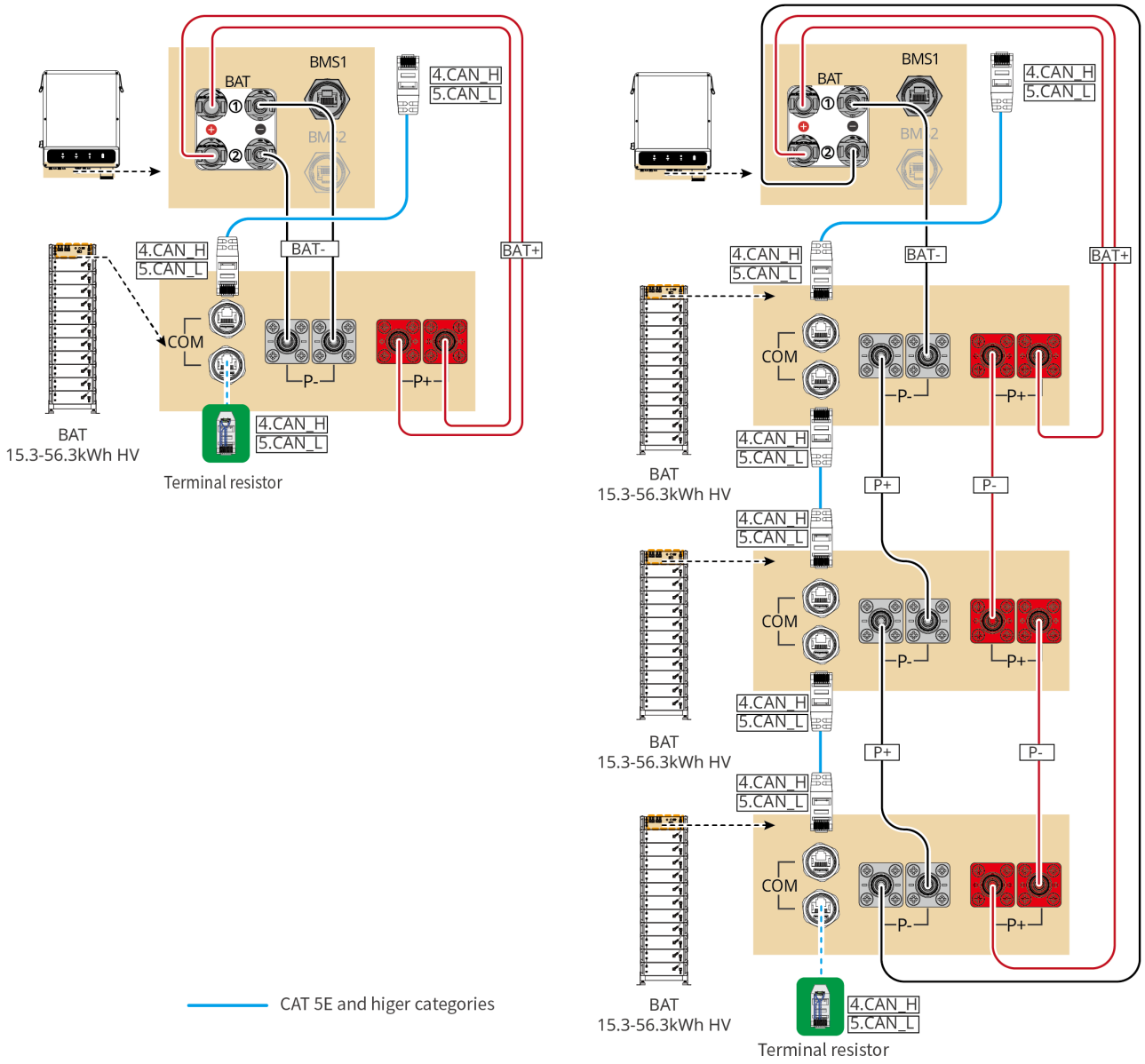

- BAT-C Series 61.4–112.6 Kwh Commercial and Industrial Battery System

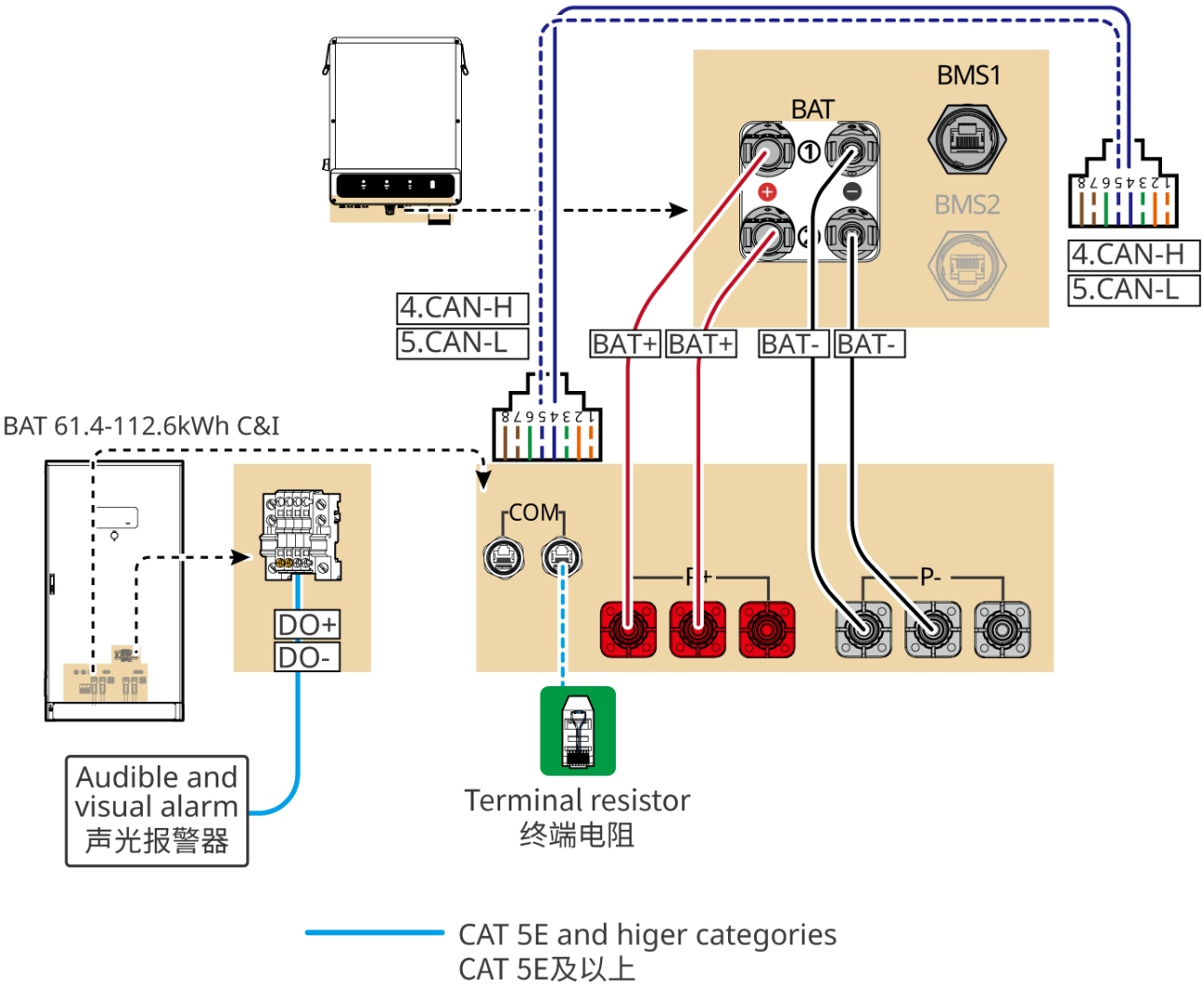

ET3010NET0012

7.6.1 Compatible with the Lynx C Series 60Kwh Commercial & Industrial Battery System

7.6.1.1 Introduction to Battery Cable Entry Holes

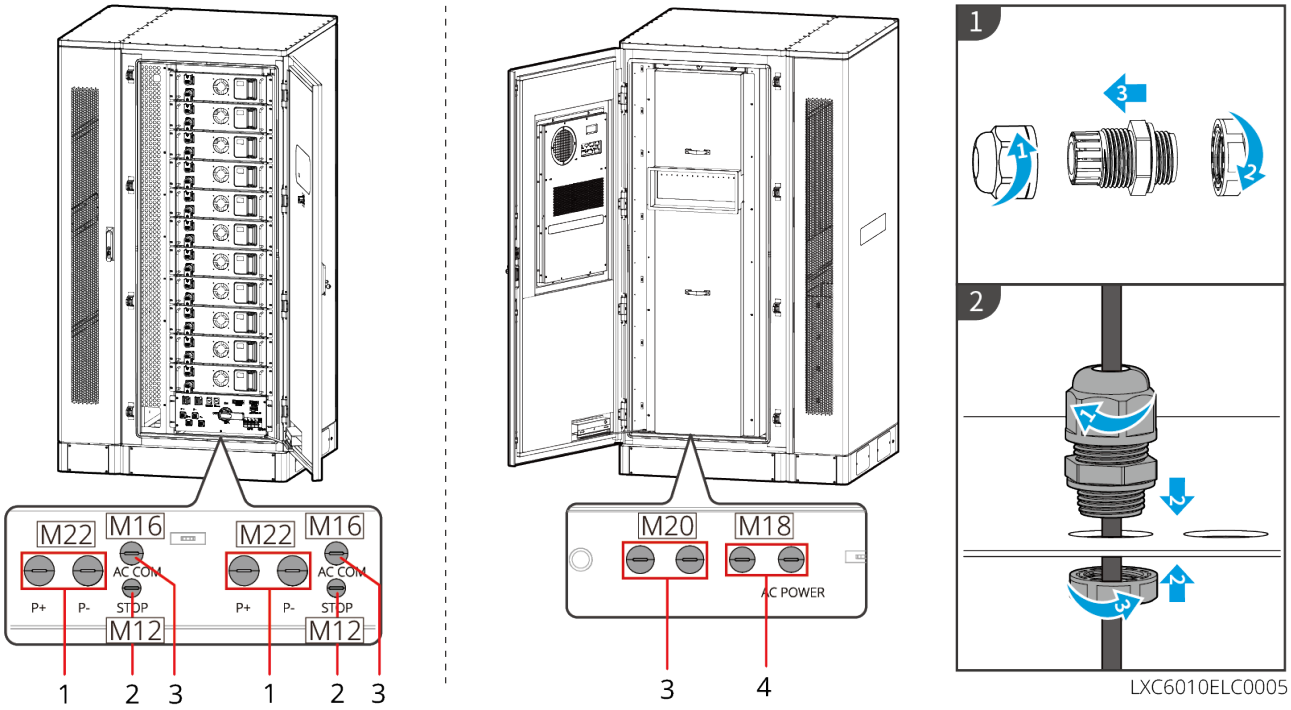

No.	Description	No.	Description
1	Battery power cable entry hole	2	EPO button control cable entry hole
3	Communication cable entry hole	4	Air conditioner cable entry hole
5	Reserved cable entry hole	-	-

7.6.1.2 Connecting the Inverter and Battery Power Cables

⚠WARNING

- Use a multimeter to measure the positive and negative poles of the DC cables to ensure correct polarity and no reverse connection, and that the voltage is within the permitted range.
- When wiring, ensure that the battery cable matches the "BAT+", "BAT-", and grounding ports of the battery terminals exactly. Incorrect cable connection will cause equipment damage.
- Please ensure that the wire core is fully inserted into the terminal wiring hole and no strands are exposed.
- Please ensure that the cables are securely connected; otherwise, during operation, the terminal block may overheat and cause equipment damage.
- Do not connect the same Battery BANK to multiple inverters; otherwise, the inverter may be damaged.

NOTE

- The battery system is shipped with the power cable for connection to the inverter.
  - If the inverter accessories include Type 1 terminals, cut off the terminal on the power cable in the battery accessories that is intended for connection to the inverter, and use the battery connector supplied with the inverter to remake the power cable.
  - If the inverter accessories include Type 2 terminals, the power cable in the battery accessories can be used directly.
  - If the power cable in the battery accessories does not have a terminal for connection to the inverter, please use the connector in the inverter accessories to make the power cable.
- Power cables for parallel connection between battery clusters must be provided by the user.
- Please connect the battery system to the BAT1 port of the inverter.

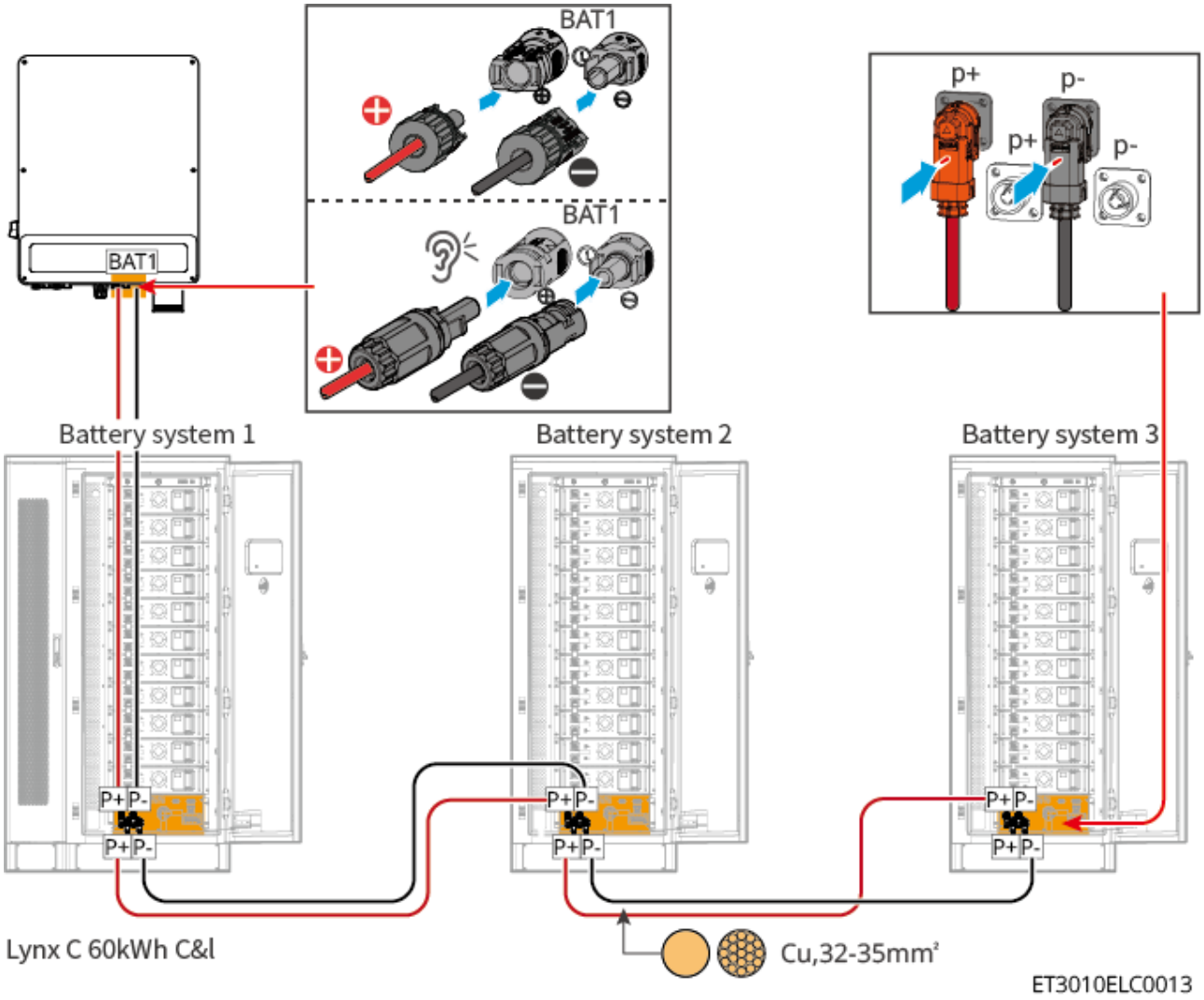

Inverter-Side Cable Preparation Method

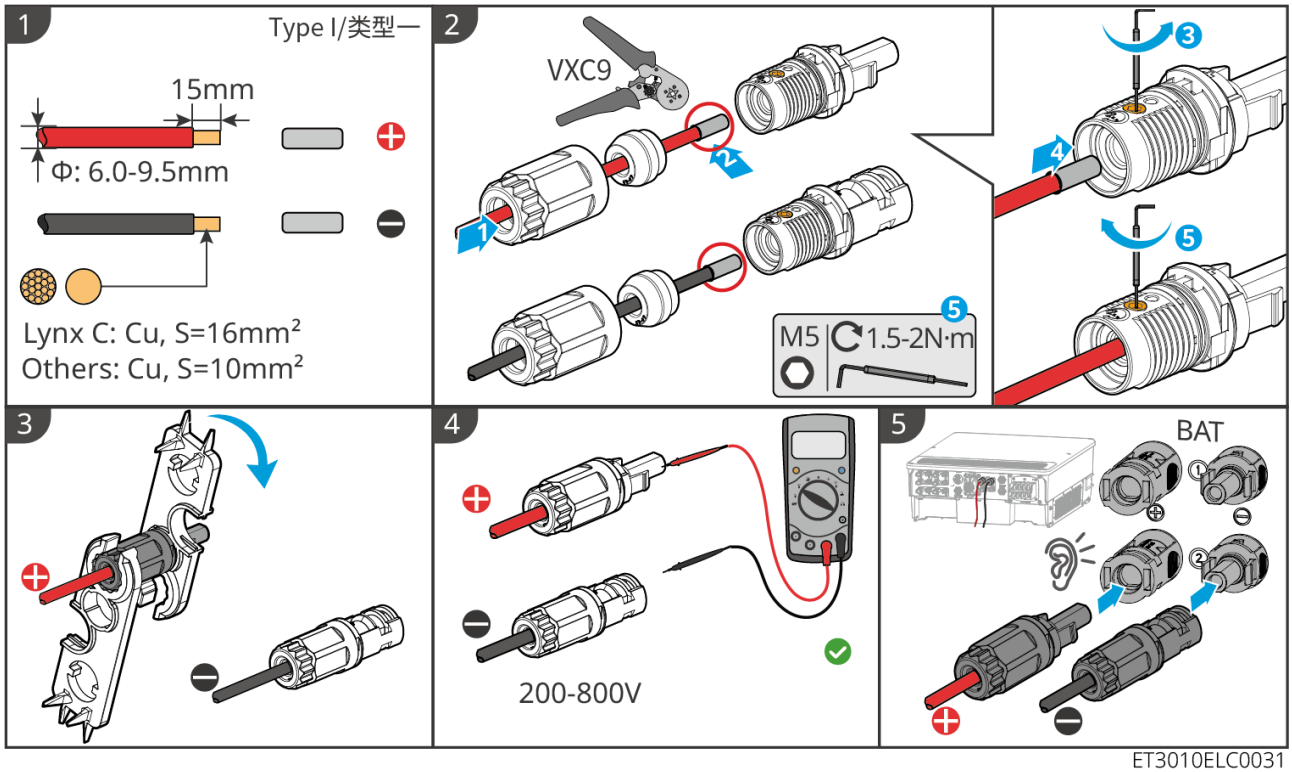

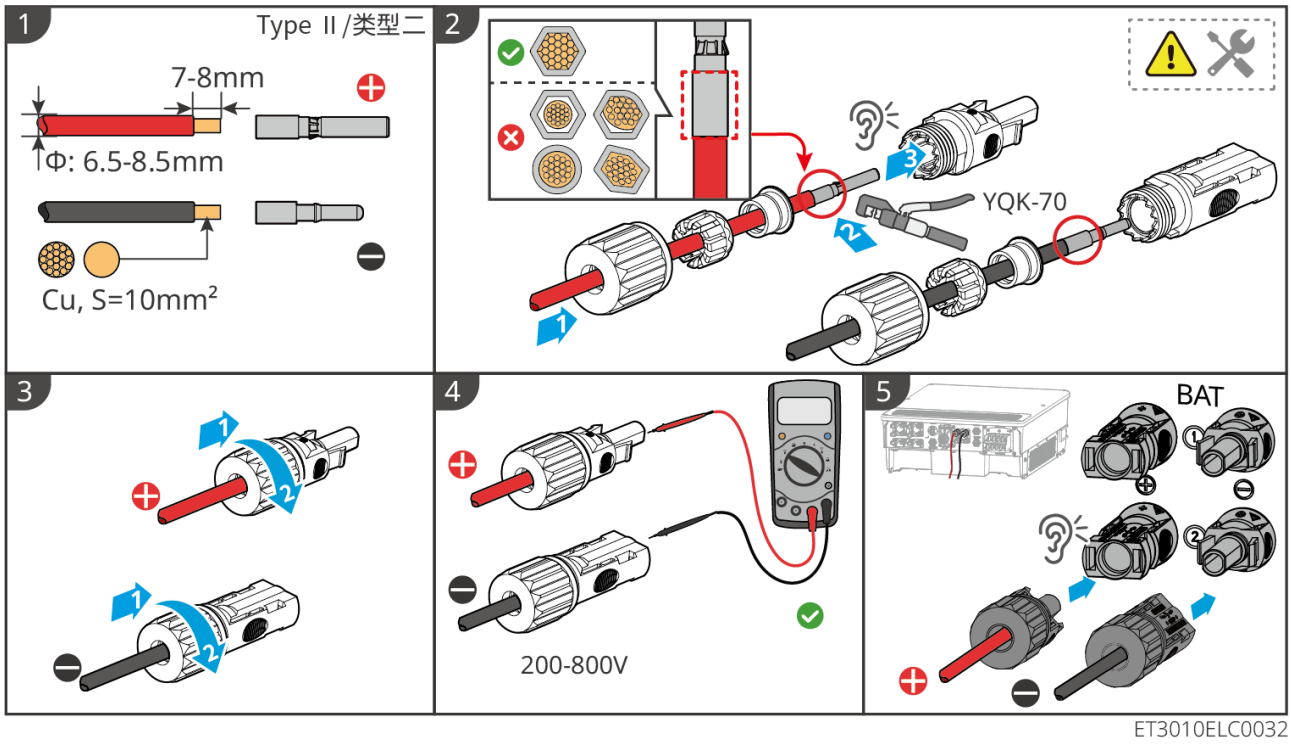

Battery System Inter-Cluster Power Cable Preparation Method

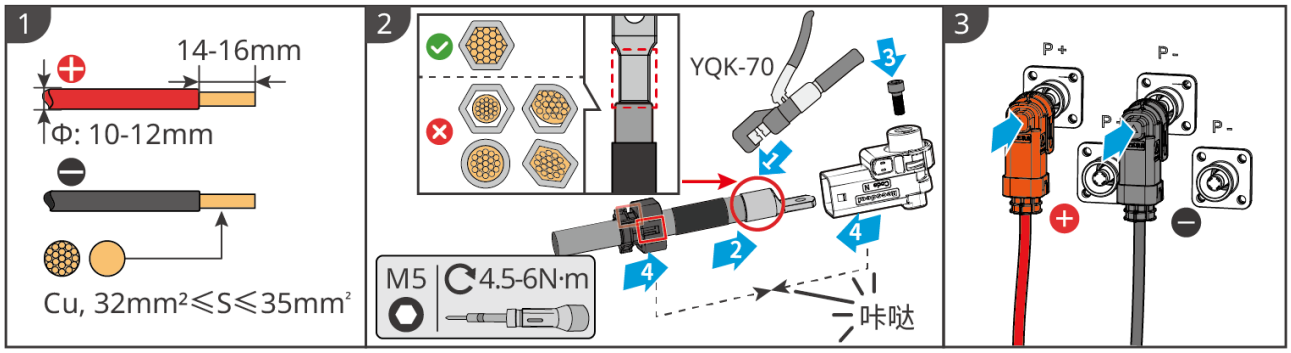

LXC6010ELC0002

7.6.1.3 Connect Battery Communication Cable

⚠WARNING

Do not omit installing the battery system termination resistor; otherwise, communication between battery systems will fail.

NOTE

- A BMS battery communication cable is supplied with the battery system. It is recommended to use the supplied BMS battery communication cable. If the supplied communication cable does not meet the requirements, prepare your own shielded network cable and shielded RJ45 plugs.
- Connect the battery system to the BMS1 communication port of the inverter; otherwise, normal communication may fail.
- The EPO switch communication cable is pre-installed on the enclosure. If the supplied communication cable does not meet the requirements, prepare your own communication cable.
- For parallel-cluster communication cables between battery systems, prepare your own shielded network cable and shielded RJ45 plugs compliant with EIA/TIA-568B.
- PIN4 and PIN5 are only for inverter communication; the parallel-cluster communication cable between battery systems does not require crimping PIN4 and PIN5.
- When battery systems are connected in parallel clusters, connect the inverter Remote Shutdown port to the master battery system.

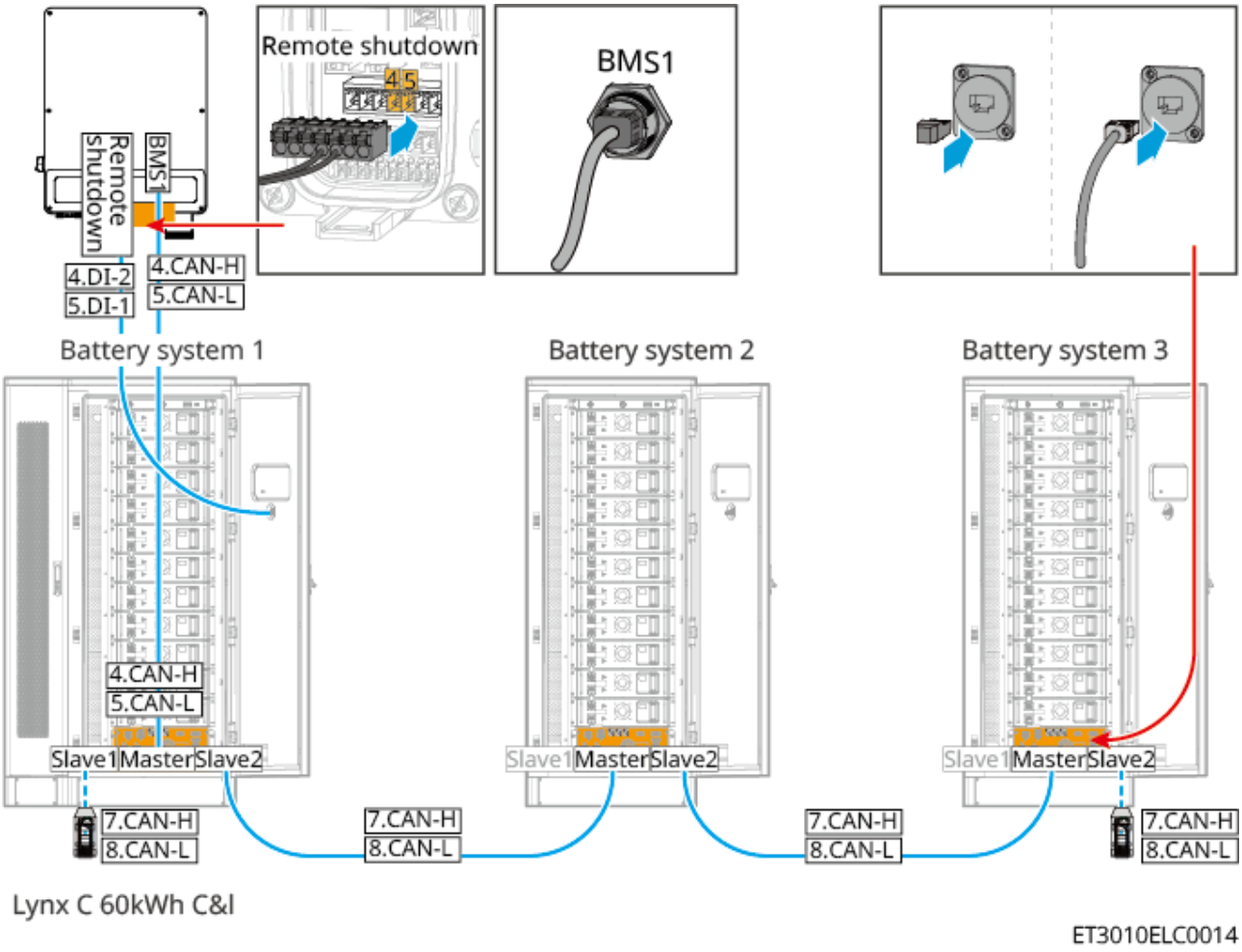

BMS communication connection instructions between the inverter and battery:

Device	Port	Definition	Description
Inverter	BMS1	4: CAN_H 5: CAN_L	CAN communication between inverter and battery
	Remote Shutdown	7: GND 8: Remote Shutdown	Connect to the battery system to control Emergency Power Off of the battery
Battery	Slave1	7: CAN_H 8: CAN_L	CAN communication for parallel clusters between batteries
	Master	1: RS485_A1 2: RS485_B1	Reserved, for communication with inverter

Device	Port	Definition	Description
		4: CAN_H 5: CAN_L	Communication with inverter
		7: CAN_H 8: CAN_L	CAN communication for parallel clusters between batteries
	Slave2	7: CAN_H 8: CAN_L	CAN communication for parallel clusters between batteries
	EPO switch	1: NC 2: COM	Connect to the inverter to control battery Emergency Power Off

7.6.1.4 Connect the Internal Power Busbar of the Battery System

NOTE
If some aluminum busbars of the battery system have been installed at the factory, recheck the torque with a tool.

Shipping scenario after partial installation of inter-battery aluminum busbars:

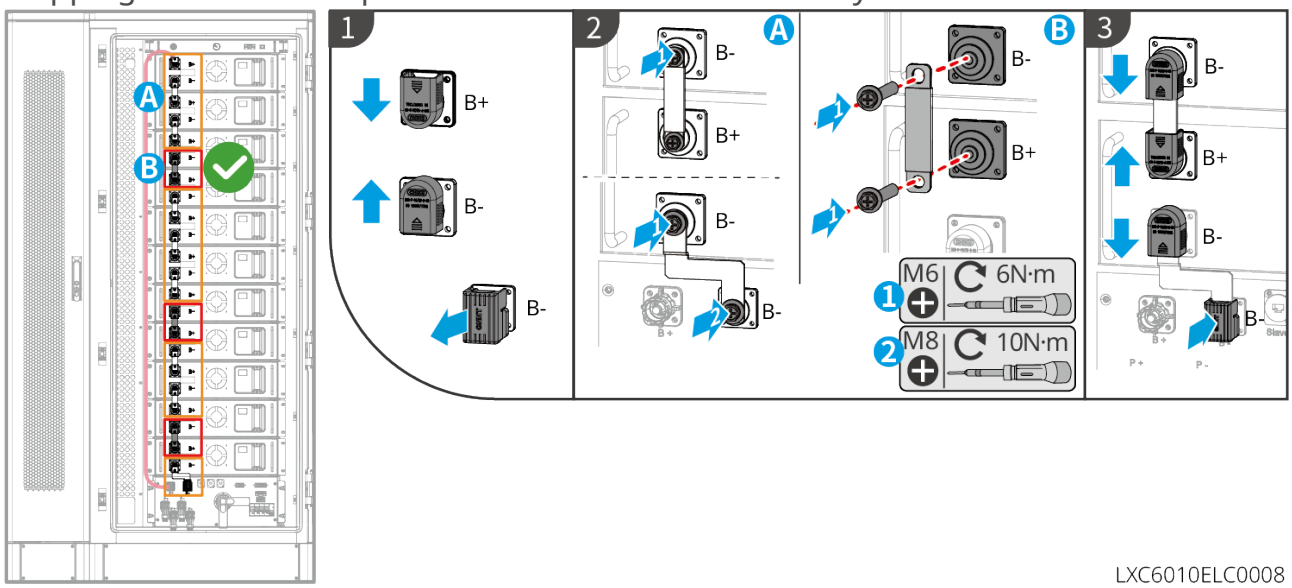

LXC6010ELC0008

Shipping scenario with inter-battery aluminum busbars not installed:

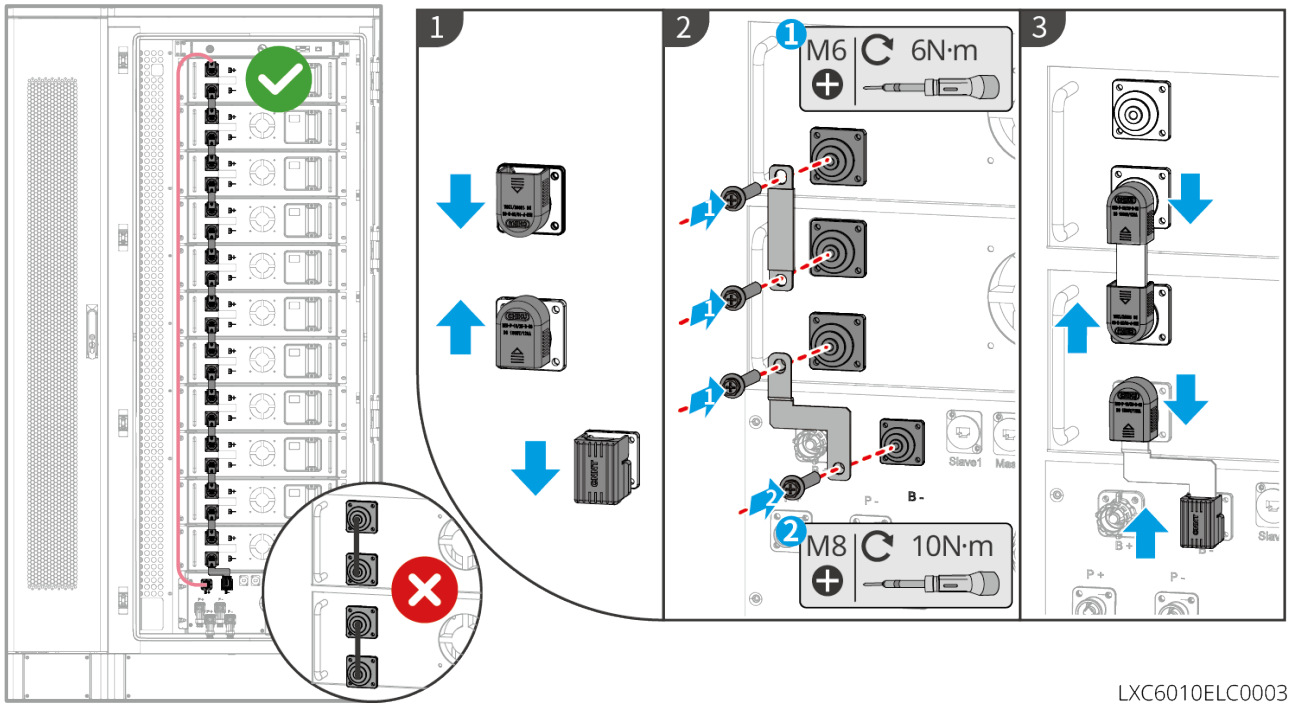

7.6.1.5 Connect the Air Conditioner Power Cable of the Battery System

NOTE

- The air conditioner power cable is pre-installed on the enclosure. If the supplied power cable does not meet the requirements, please provide an extension cable yourself.
- It is recommended to connect the air conditioner power cable to the distribution cabinet for power supply.
- If the air conditioner requires emergency power supply, the air conditioner power cable can be connected to the inverter BACK UP side for power supply.
- To ensure that the air conditioner can be safely disconnected from the distribution cabinet in the event of an abnormality, please install an AC Switch between the air conditioner and the distribution cabinet. The specification of the AC Switch shall be no less than 16A.
- To ensure heat dissipation performance, do not arbitrarily modify the default temperature parameter settings of the air conditioner.

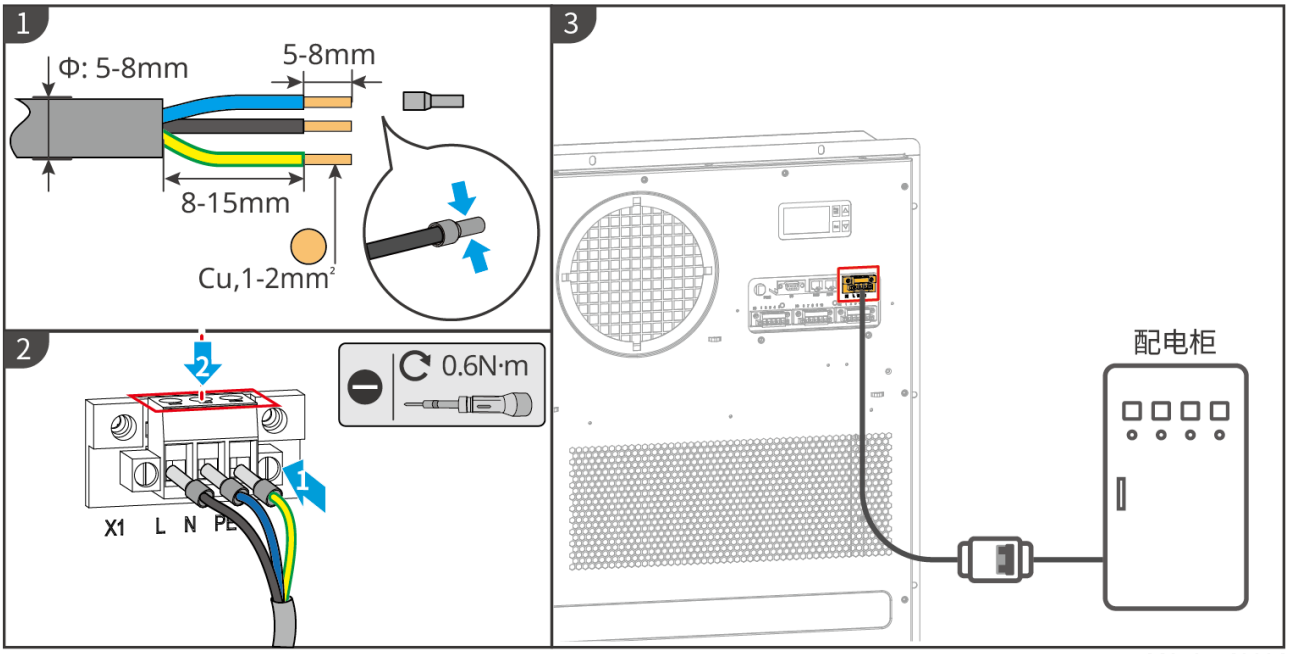

LXC6010ELC0006

7.6.1.6 Connect the Battery System Air Conditioner Drain Pipe

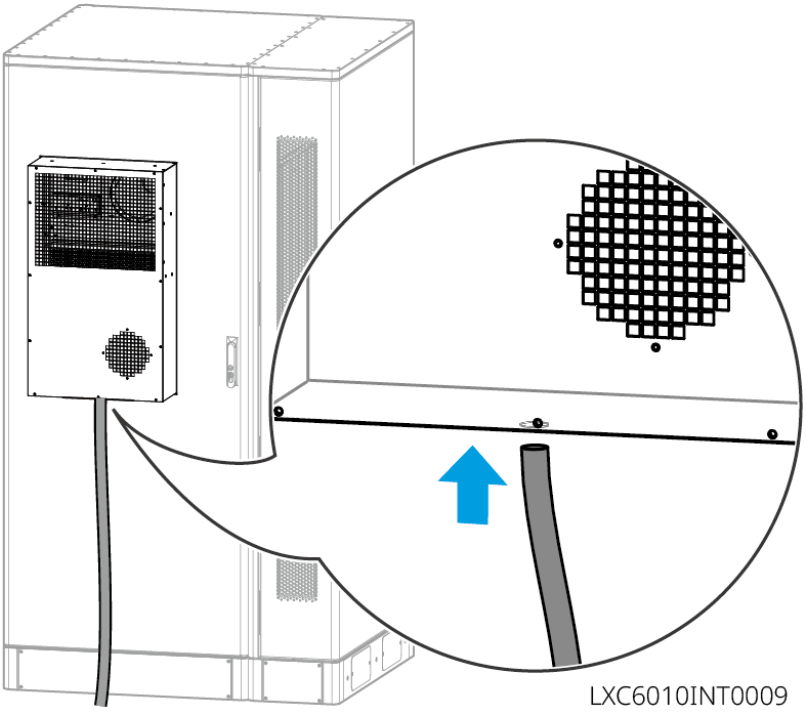
LXC6010INT0009

7.6.1.7 Turn on the Fire Suppression Switch

NOTE
The "open" and "close" functions of the fire suppression equipment may only be enabled during professional maintenance or replacement of the temperature-sensing activation components.

Fire suppression equipment switch operation scenarios:

- If there is a Do Not Touch label, no operation is required.

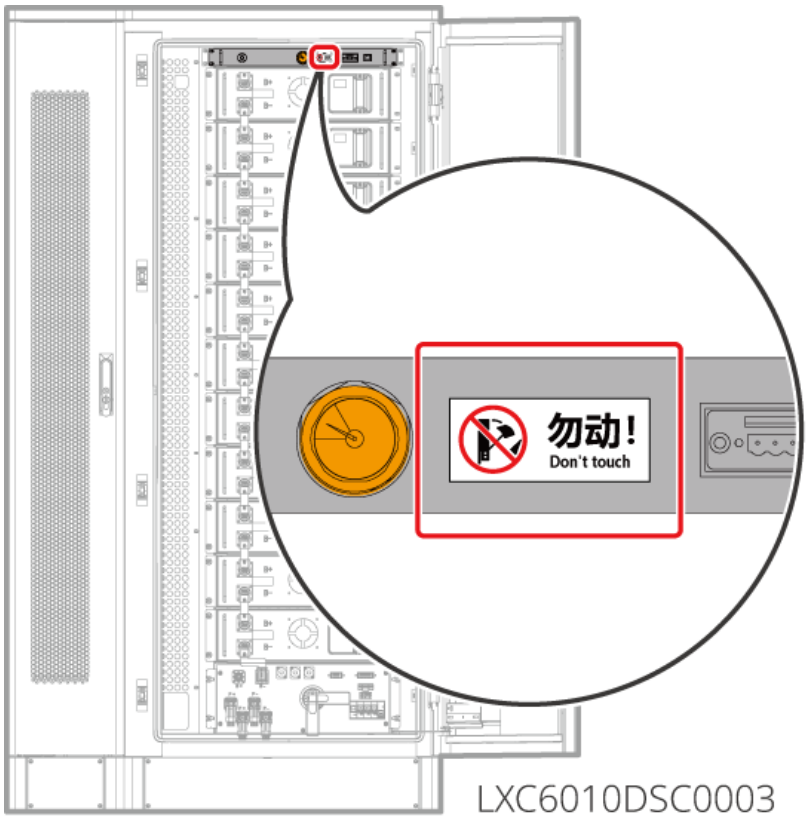

LXC6010DSC0003

- If there is no label, refer to the following steps to turn on the fire suppression switch. Use a 14 mm wrench to rotate the screw rod behind the pressure gauge counterclockwise by approximately 1.5 turns until it reaches the end; the fire suppression system is then successfully opened.

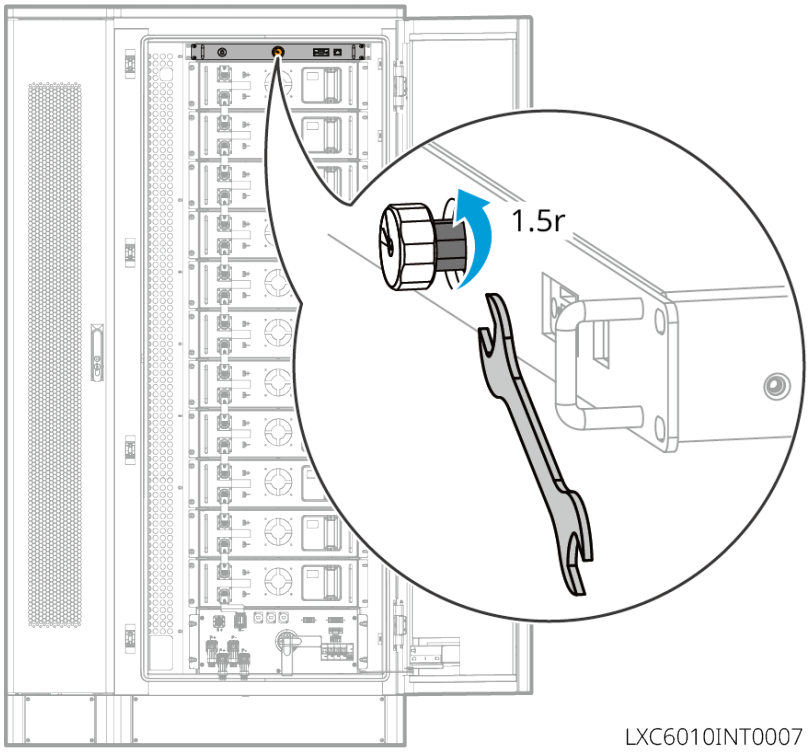

LXC6010INT0007

7.6.1.8 Install the Baffle Plate

After the cable connection is completed, the bottom baffle plate must be installed.

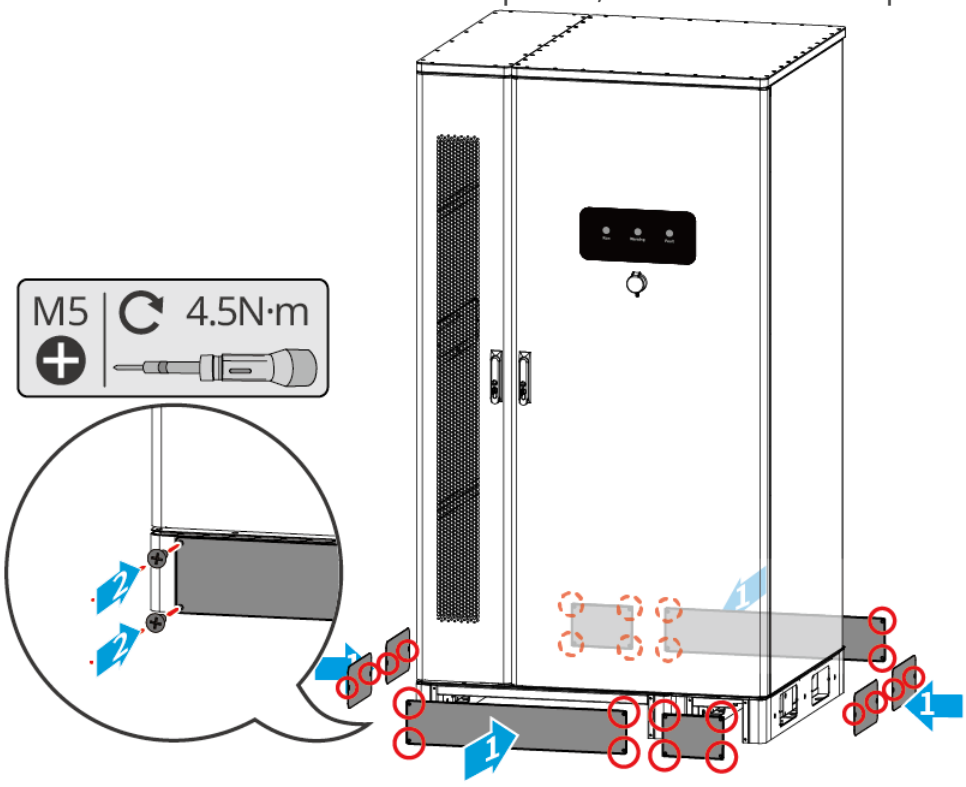

LXC6010INT0008

7.6.2 Compatible with BAT-S Series 15.3–56.3 Kwh High-Voltage Battery

Inverter	GW12KL-ET	GW18KL-ET	GW15K-ET	GW20K-ET	GW25K-ET	GW29.9K-ET	GW30K-ET
Number of BAT ports	1	2	1	1	2	2	2
Minimum number of PACKs required to match BAT-S series batteries (operable)	3PACK	3PACK	5PACK	5PACK	5PACK	5PACK	5PACK
Minimum number of PACKs required to match BAT-S series batteries (full load)	5PACK	4PACK	6PACK	8PACK	5PACK	6PACK	6PACK

7.6.2.1 Connecting the Inverter and Battery Power Cables

NOTE
BAT-S series 15.3-56.3 kWh high-voltage batteries support up to 6 battery cabinets in parallel cluster configuration.

Wiring Overview

- 15-20kW inverters have only one BAT port; connect one port when used with batteries.

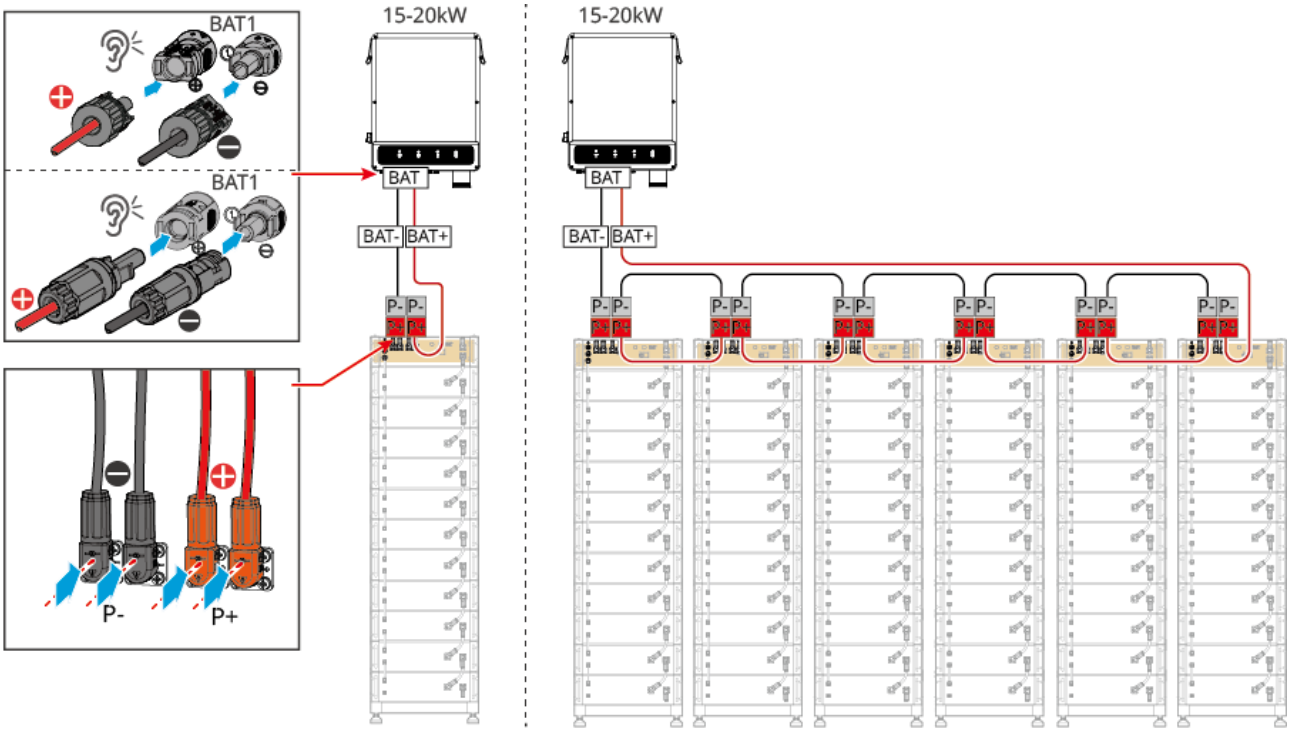

ET3010ELC0038

- 25-30kW inverters have two BAT ports; both ports must be connected when used with batteries.

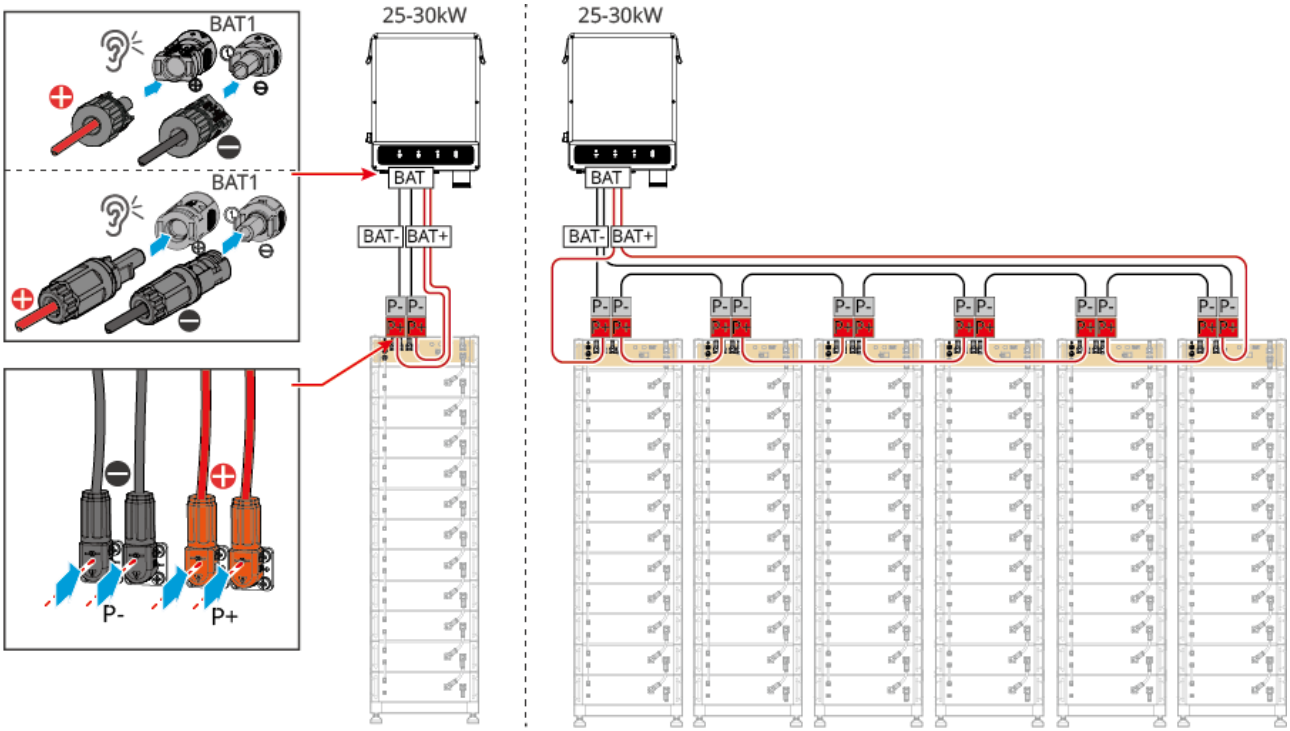

ET3010ELC0039

Inverter-Side Cable Preparation Method

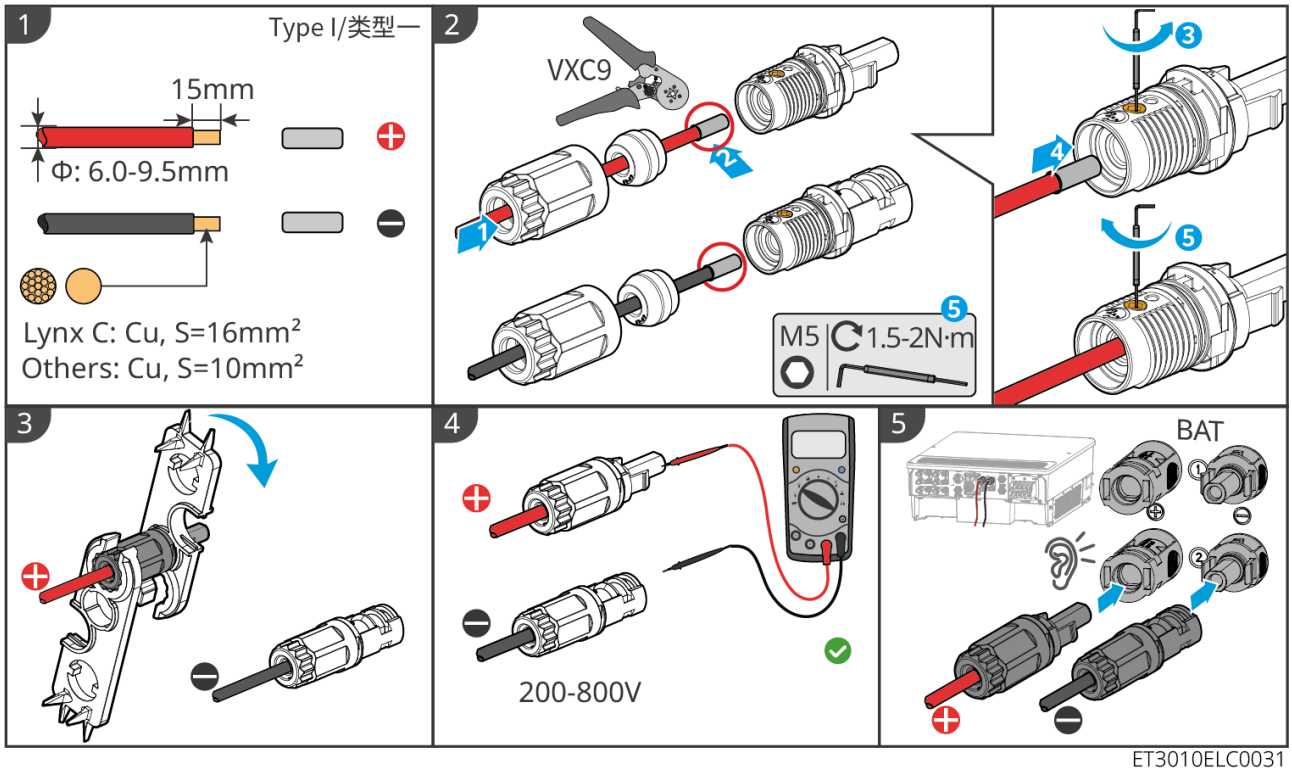

ET3010ELC0031

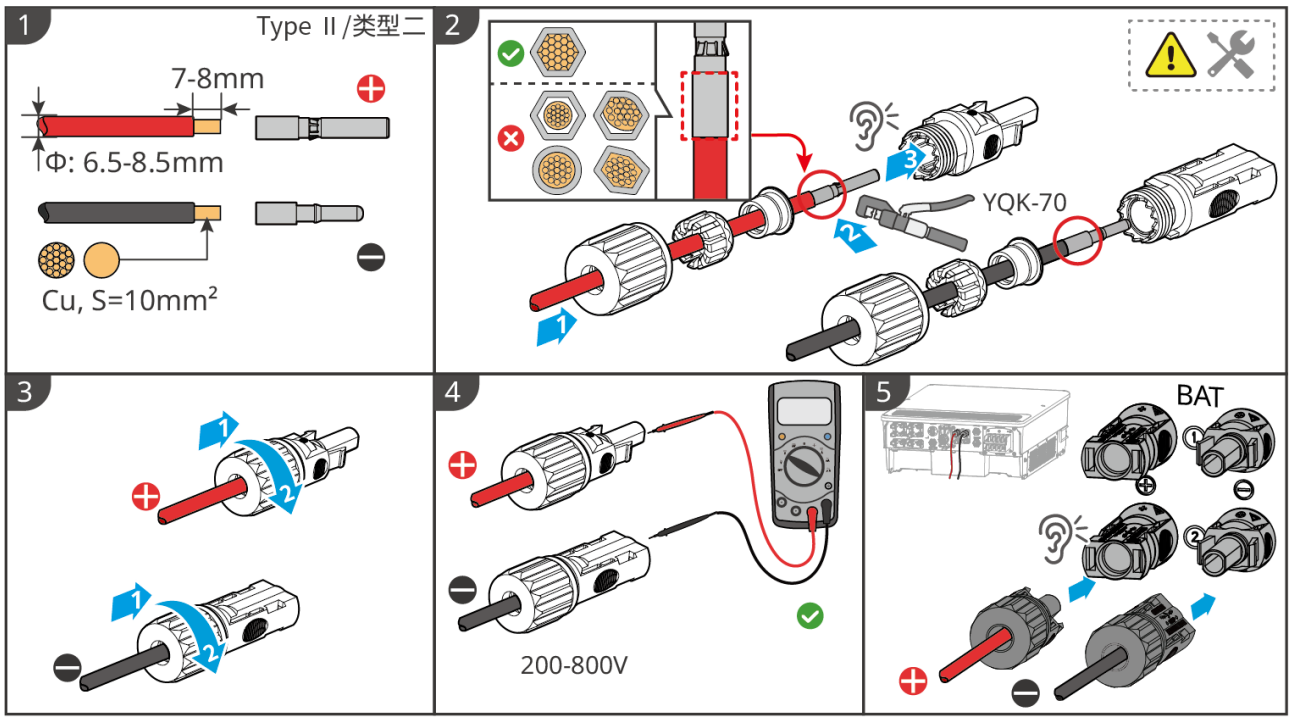

ET3010ELC0032

Battery-Side Cable Fabrication Method (Including Parallel Cluster Wiring)

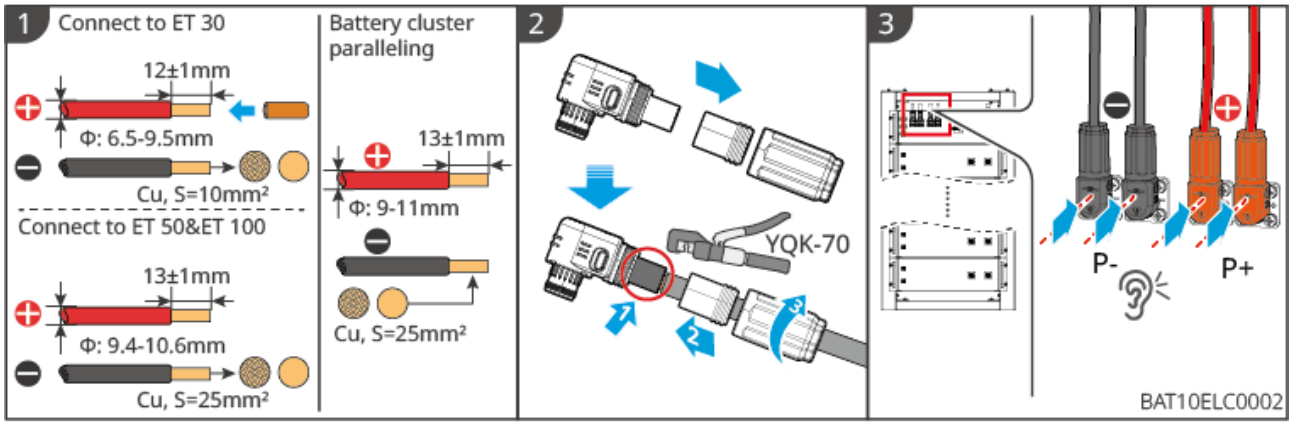

7.6.2.2 Connect Inter-Battery Power Cables

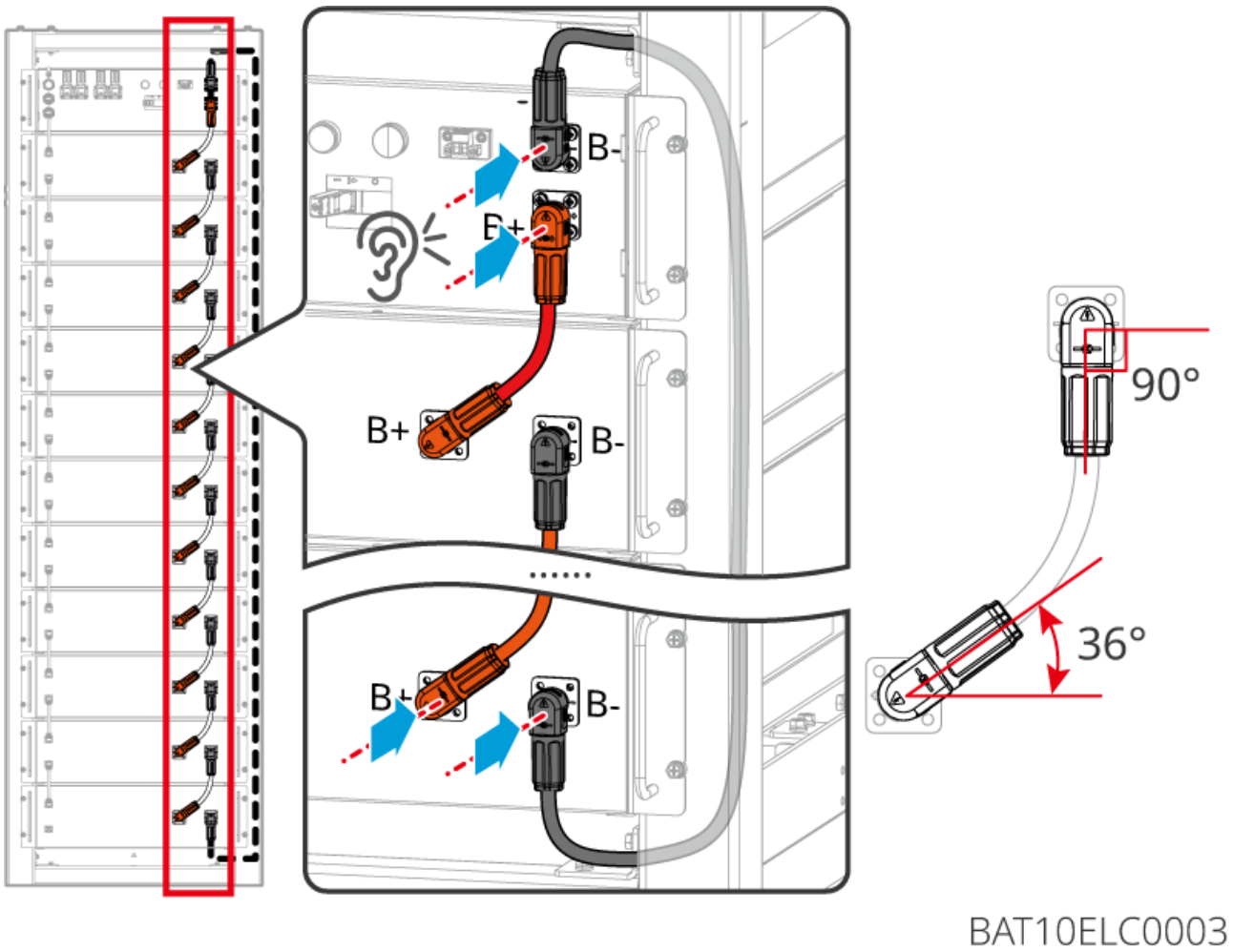

7.6.2.3 Connect Communication Cable

NOTE
The battery system is shipped with a communication cable; please use the communication cable provided in the box.

BMS communication connection instructions between the inverter and battery:

Port	Definition	Description
COM1、COM2	1：RS485_A1 2：RS485_B1	Communication with inverter (reserved).
	4：CAN_H 5：CAN_L	Communication with the inverter or parallel cluster communication.

Inverter-to-Battery Communication Wiring

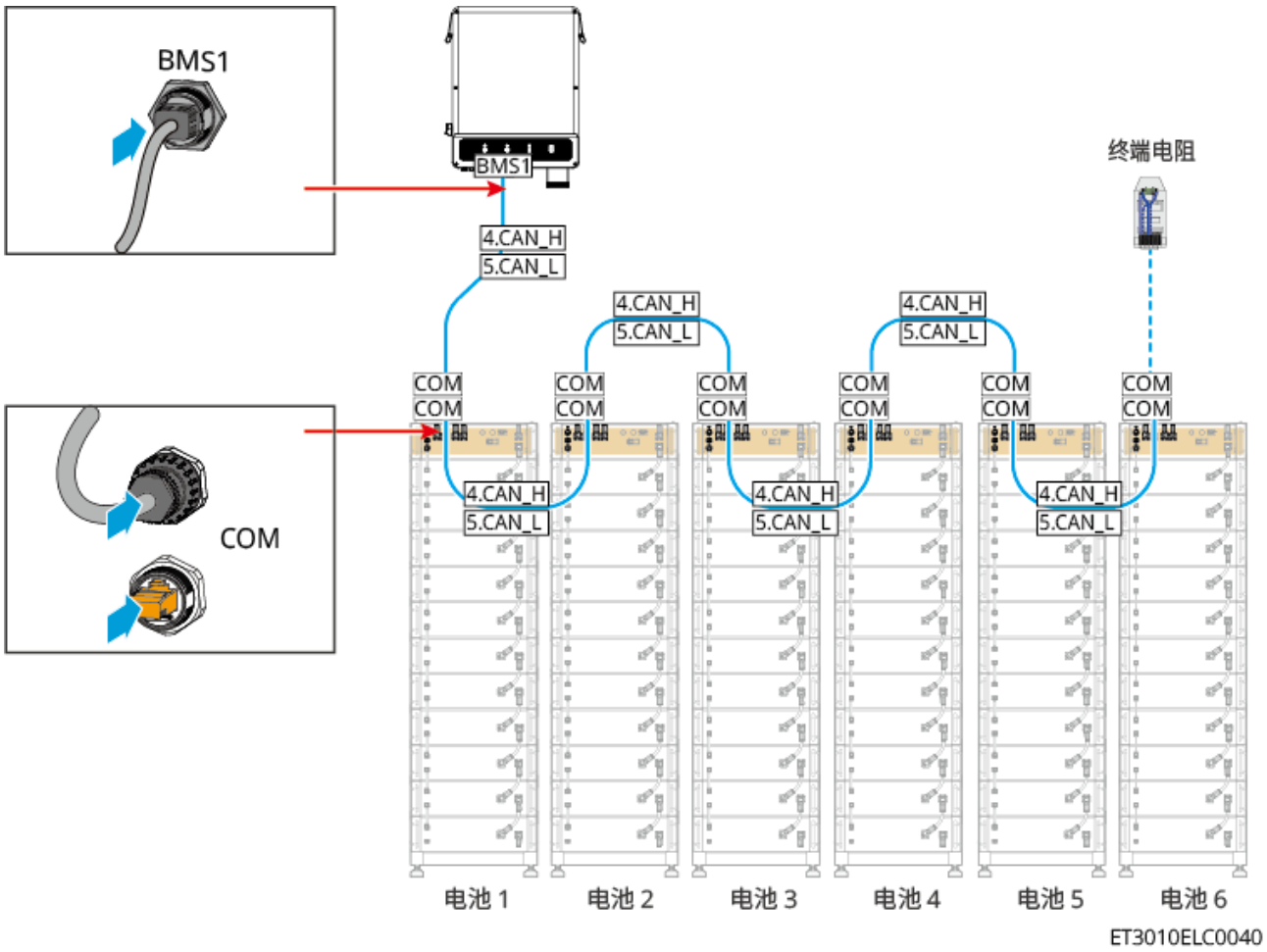

Communication Wiring Between Battery Packs

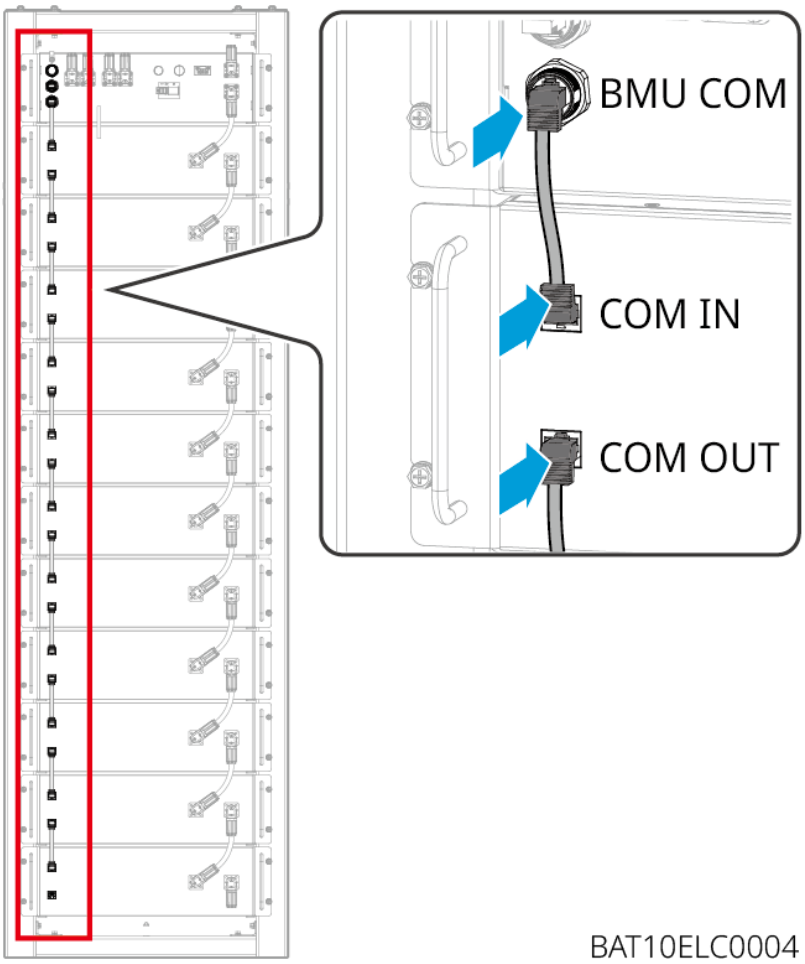

NOTE
When connecting the communication cables between battery PACKs, do not connect the COM OUT port of the bottommost PACK, and there is no need to connect a termination resistor!

7.6.3 Compatible with the BAT-C Series 61.4-112.6Kwh Commercial & Industrial Battery System

Inverter	GW15K-ET	GW20K-ET	GW25K-ET	GW29.9K-ET	GW30K-ET
Number of BAT ports	1	1	2	2	2

Inverter		GW15K-ET	GW20K-ET	GW25K-ET	GW29.9K-ET	GW30K-ET
Compatible with the BAT 61.4kWh battery system	Wiring method	Connect to 1 BAT port	Connect to 1 BAT port	Connect to 2 BAT ports	Connect to 2 BAT ports	Connect to 2 BAT ports
	Whether full-load operation is supported	Yes	No	Yes	Yes	Yes
Compatible with the BAT 92.1kWh battery system	Wiring method	Connect to 1 BAT port	Connect to 1 BAT port	Connect to 2 BAT ports	Connect to 2 BAT ports	Connect to 2 BAT ports
	Whether full-load operation is supported	Yes	Yes	Yes	Yes	Yes
Compatible with the BAT 102.4kWh battery system	Wiring method	Connect to 1 BAT port	Connect to 1 BAT port	Connect to 1 BAT port	Connect to 2 BAT ports	Connect to 2 BAT ports
	Whether full-load operation is supported	Yes	Yes	Yes	Yes	Yes
Compatible with the BAT 112.6kWh battery system	Wiring method	Connect to 1 BAT port	Connect to 1 BAT port	Connect to 1 BAT port	Connect to 2 BAT ports	Connect to 2 BAT ports
	Whether full-load operation is supported	Yes	Yes	Yes	Yes	Yes

7.6.3.1 Introduction to Battery Cable Entry Holes and System Wiring

⚠WARNING

All cut cable routing holes must be sealed with firestop putty.

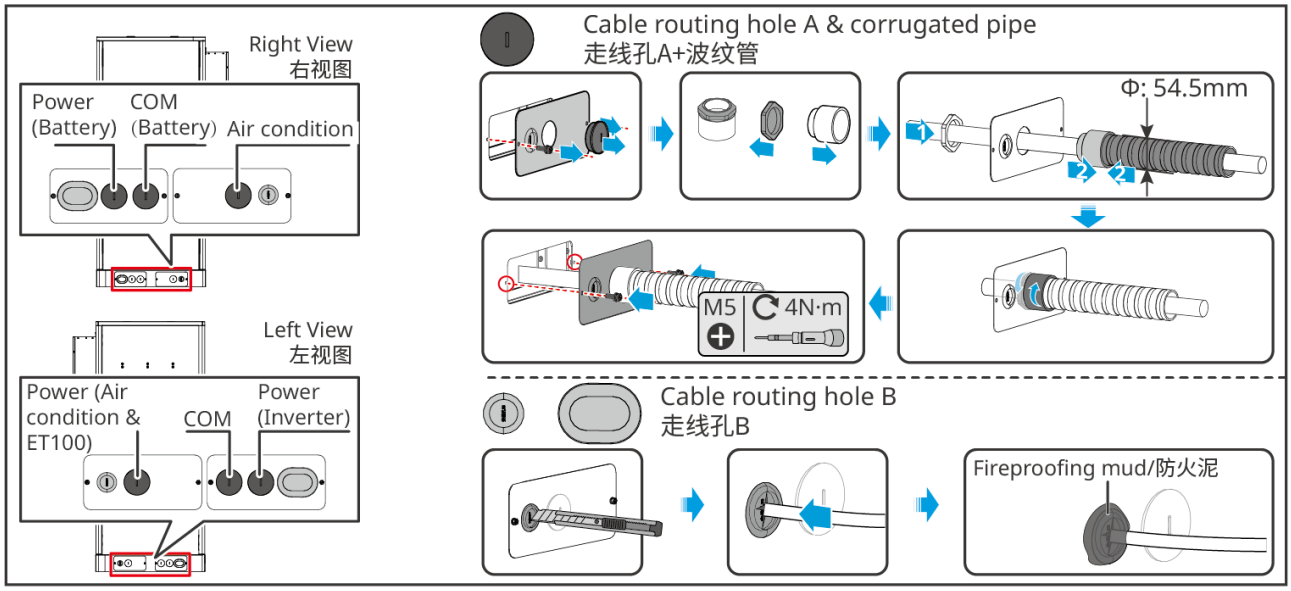

BAT10INT0014

7.6.3.2 Connecting the Inverter and Battery Power Cables

Inverter-Side Cable Preparation Method

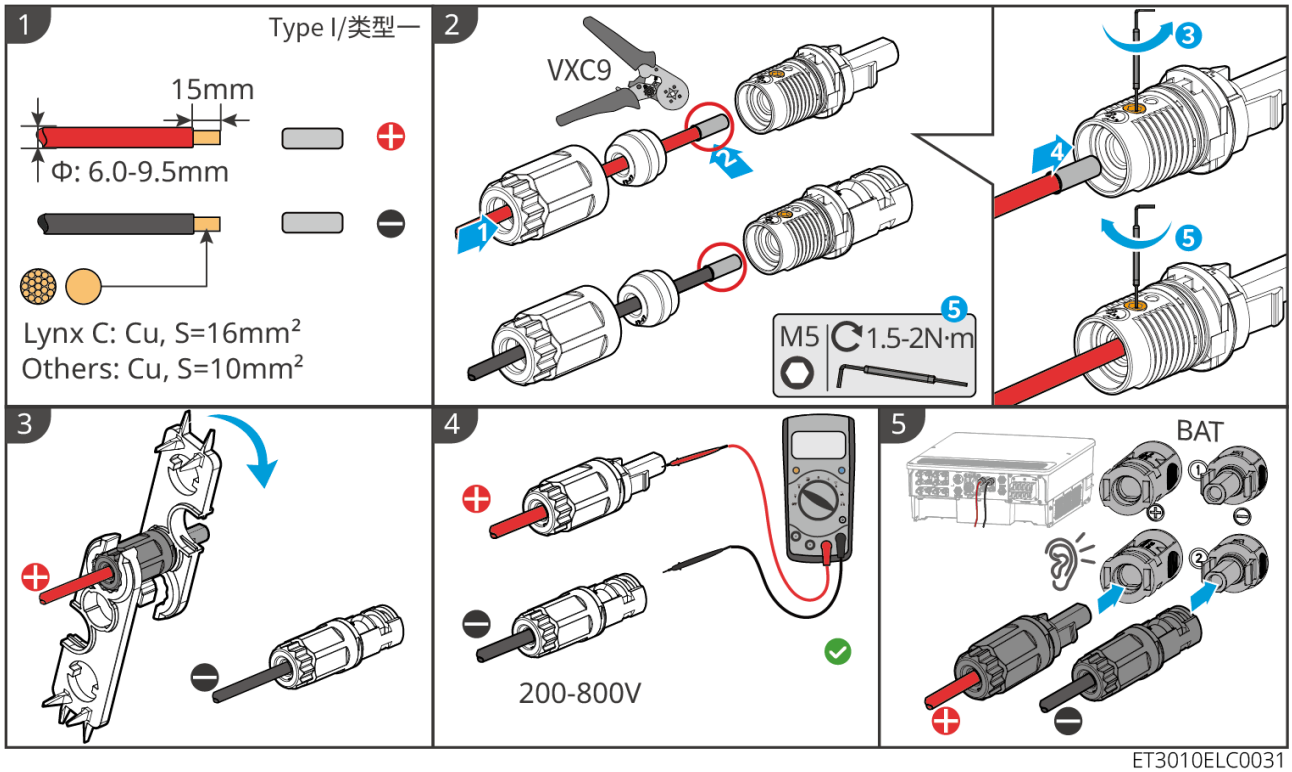

ET3010ELC0031

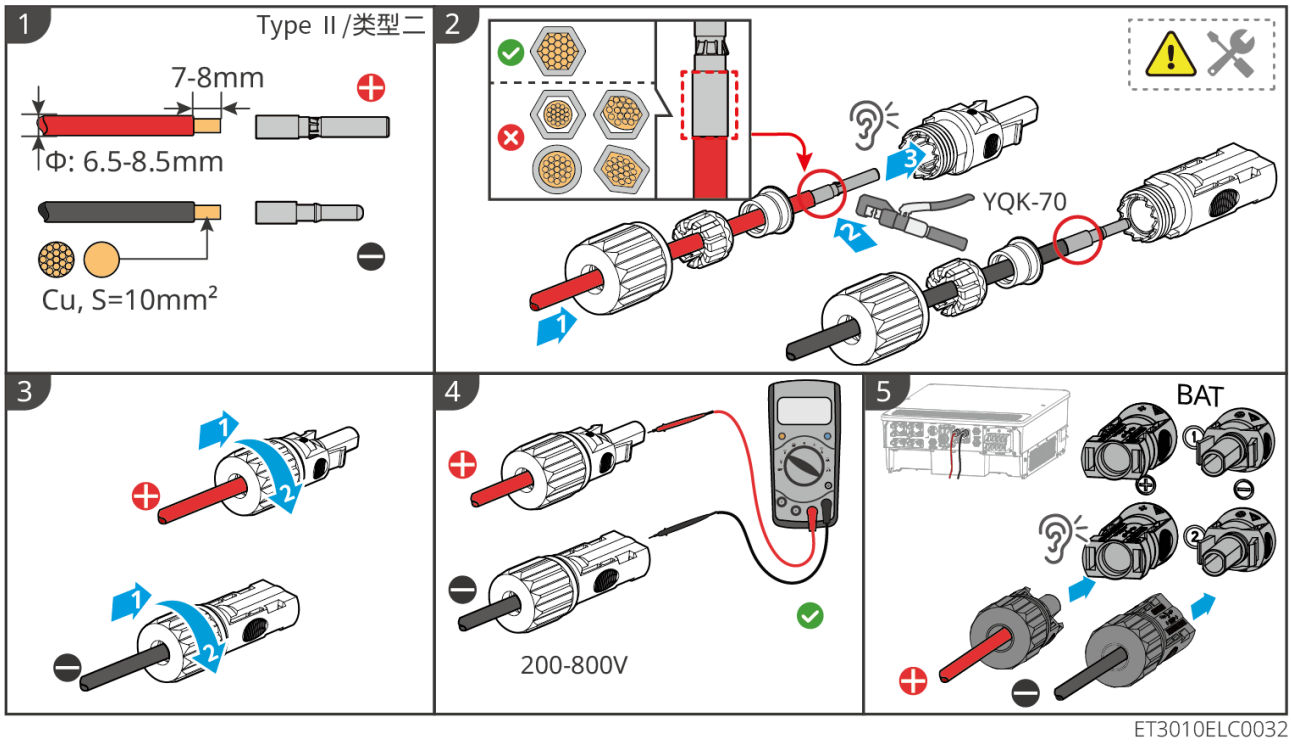

ET3010ELC0032

Battery-Side Cable Preparation Method

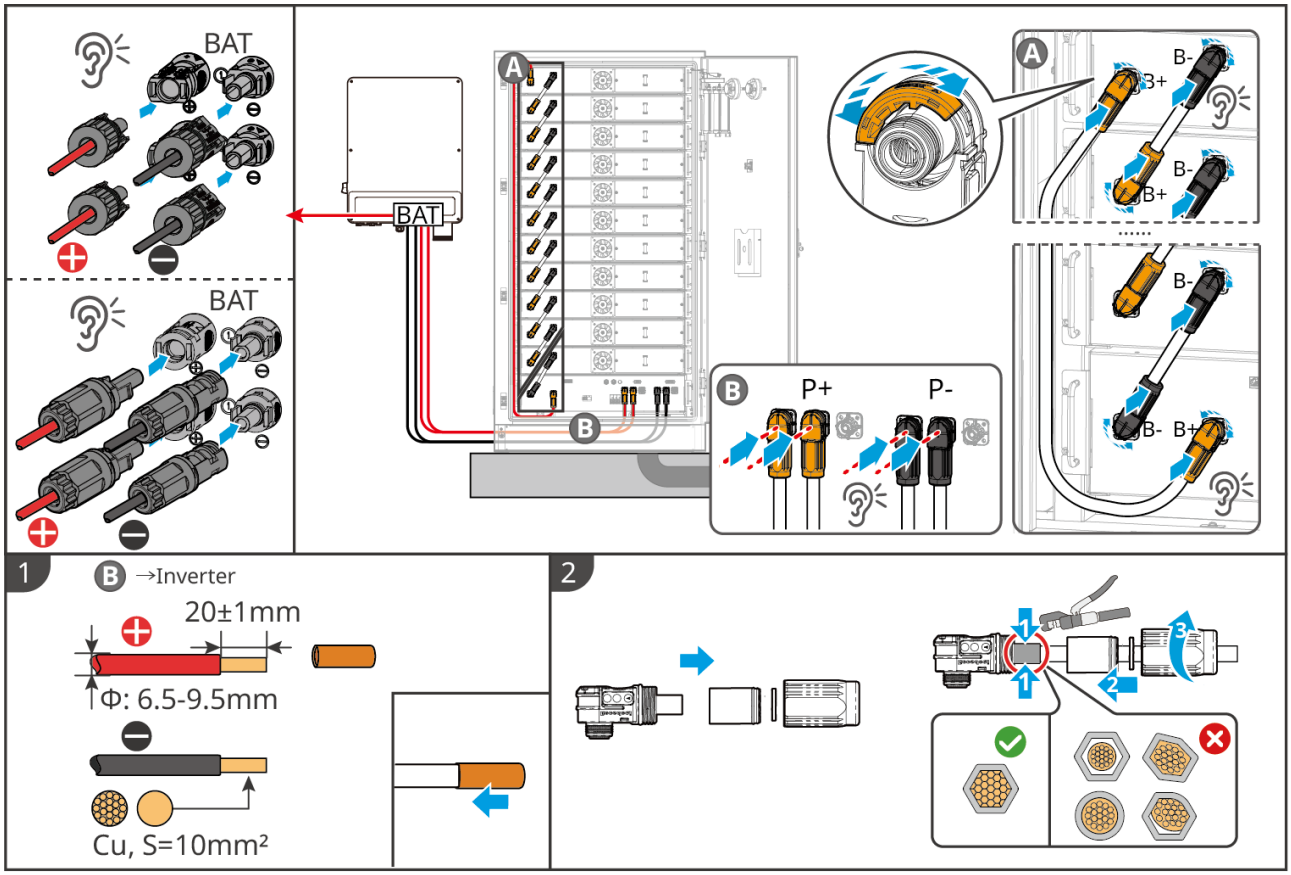

BAT10ELC0011

7.6.3.3 Connect Battery Communication Cable

NOTE

- The battery system is shipped with a communication cable; please use the communication cable provided in the box.
- At the factory, termination resistors have already been connected to the external communication ports of the battery system. If a communication cable needs to be connected, remove the termination resistor. Keep the termination resistor on ports not connected to communication cables.

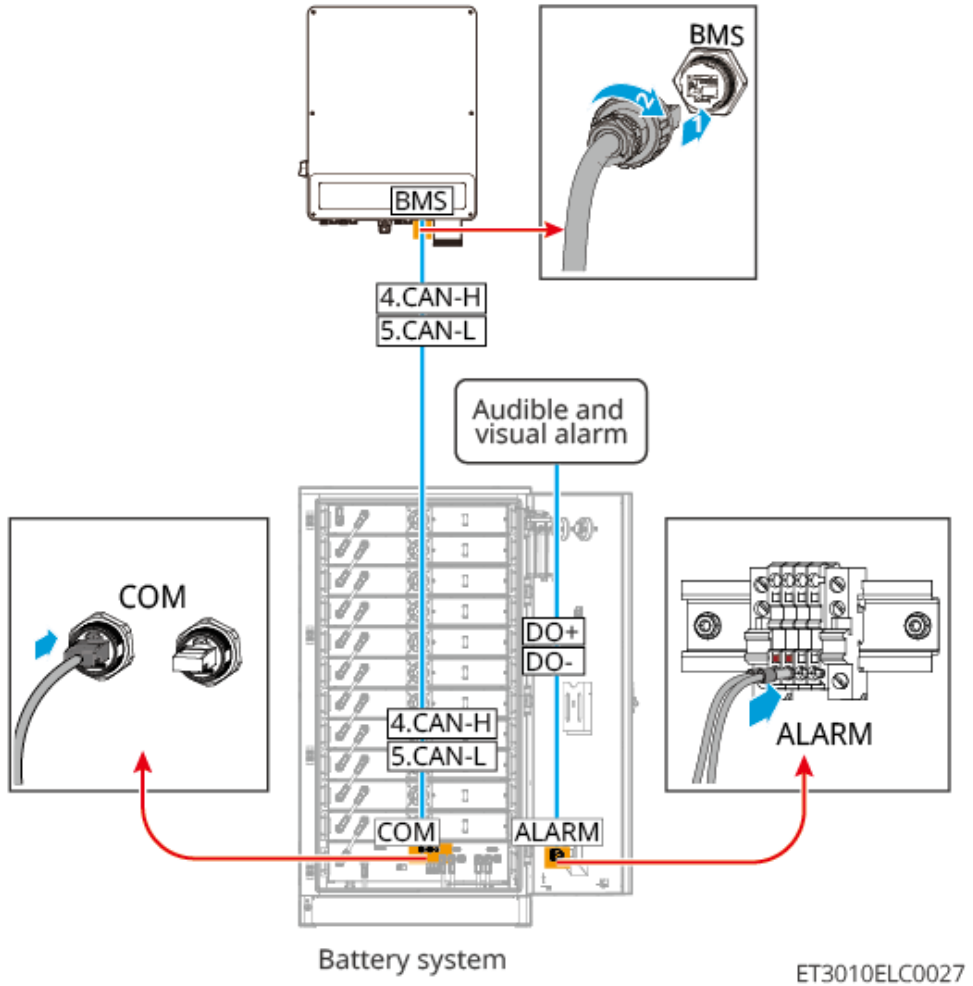

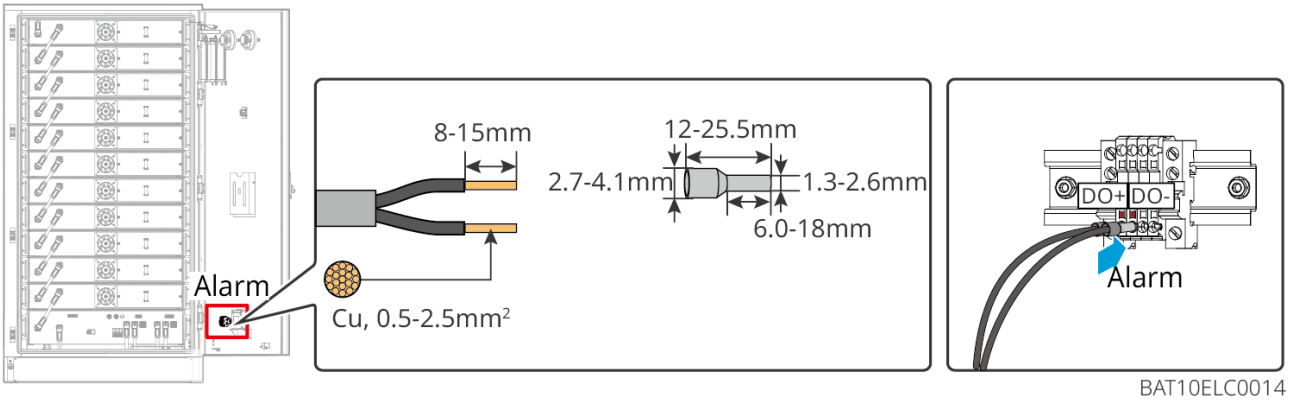

BMS communication connection instructions between the inverter and battery:

Port	Definition	Description
1-3，6-8	-	-
4	CAN_H	Communication with inverter
5	CAN_L	

7.6.3.4 Connect the Battery Air Conditioner Cable

Wiring steps:
Step 1: Make the air conditioner cable.
Step 2: Connect the cable to the air conditioner switch on the battery.
Step 3: Connect the cable directly to the distribution board or, through the distribution board, to the BACKUP port of the inverter.

NOTE
Please ensure that the voltage of the air conditioner power cable is 220V±15% and the Rated Current is 12A.

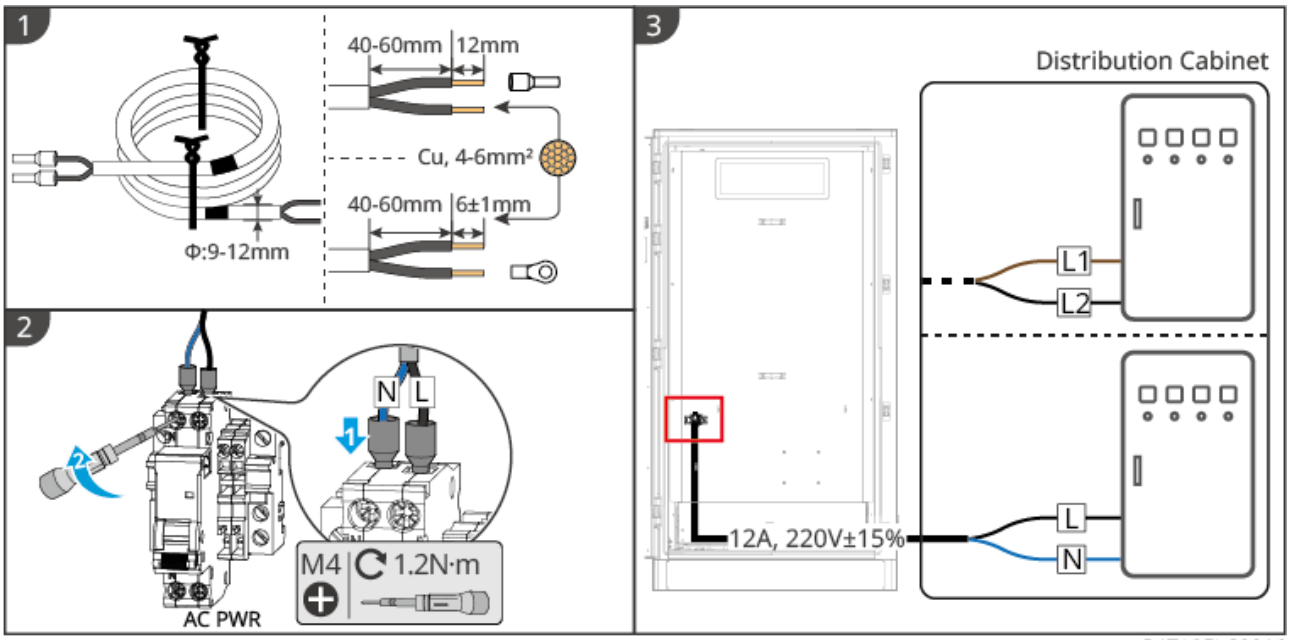

7.6.3.5 Install the Bottom Plate and Release the EPO Switch

After wiring is completed, reinstall the bottom baffle plate of the battery in its original position, and rotate the EPO switch clockwise to release it.

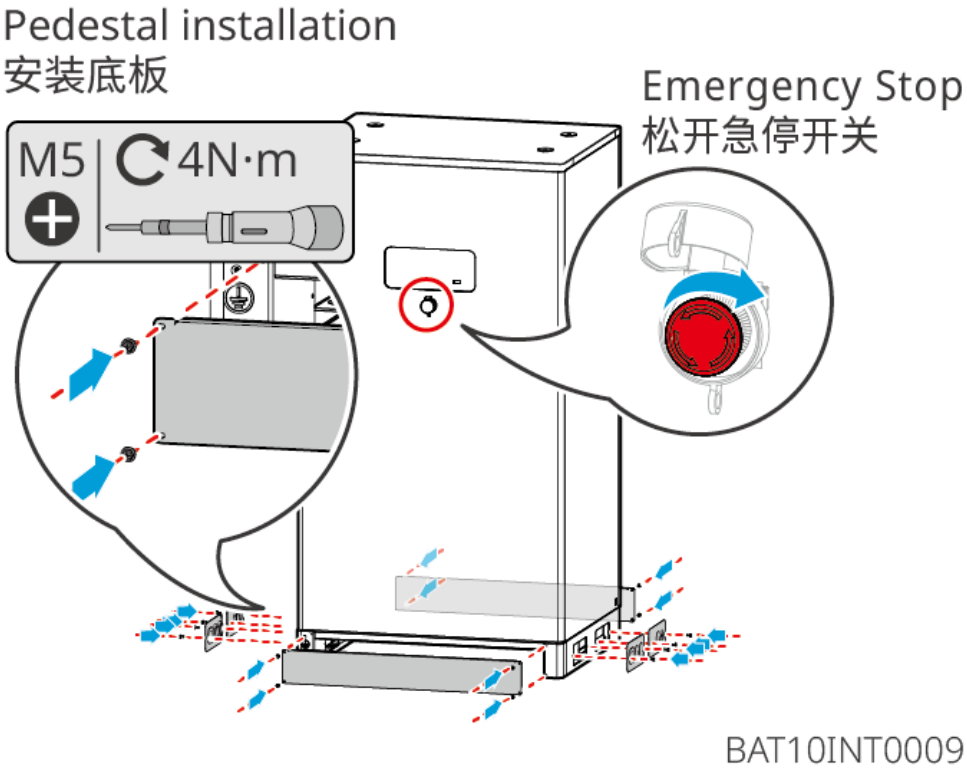

7.7 Connecting the AC Cables

WARNING

- The inverter has an integrated Residual Current Monitoring unit (RCMU), which prevents the residual current from exceeding the specified value. When the inverter detects a leakage current greater than the permissible value, it will quickly disconnect from the grid or generator.
- When wiring, the AC cables must match the AC terminals'"L1"、"L2"、"L3"、"N"、"PE"ports exactly; incorrect cable connection will cause equipment damage.
- Please ensure that the wire core is fully inserted into the terminal wiring hole and no strands are exposed.
- Please ensure that the insulating plate at the AC terminal is securely clamped and not loose.
- Ensure that the cables are securely connected; otherwise, during operation, the terminal block may overheat and cause equipment damage.

Type 1:

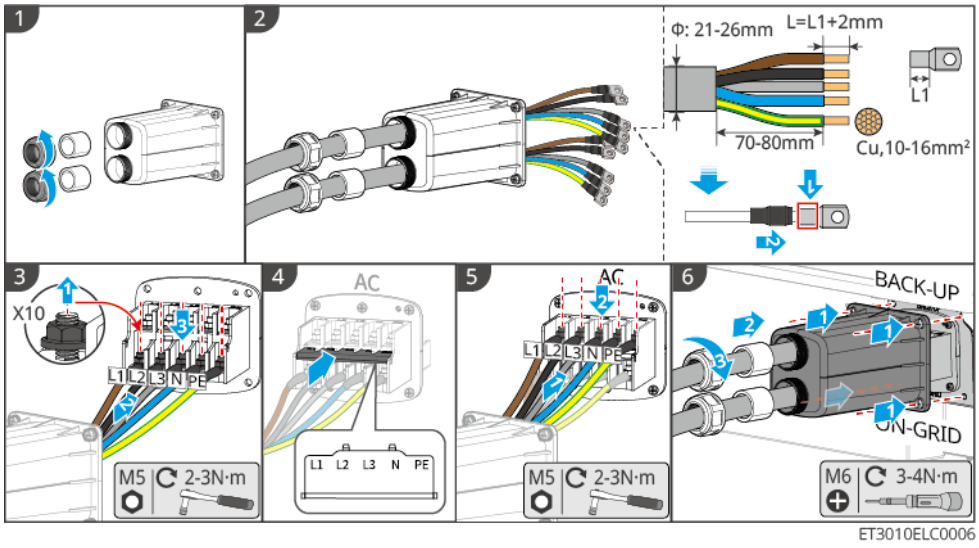

Type 2:

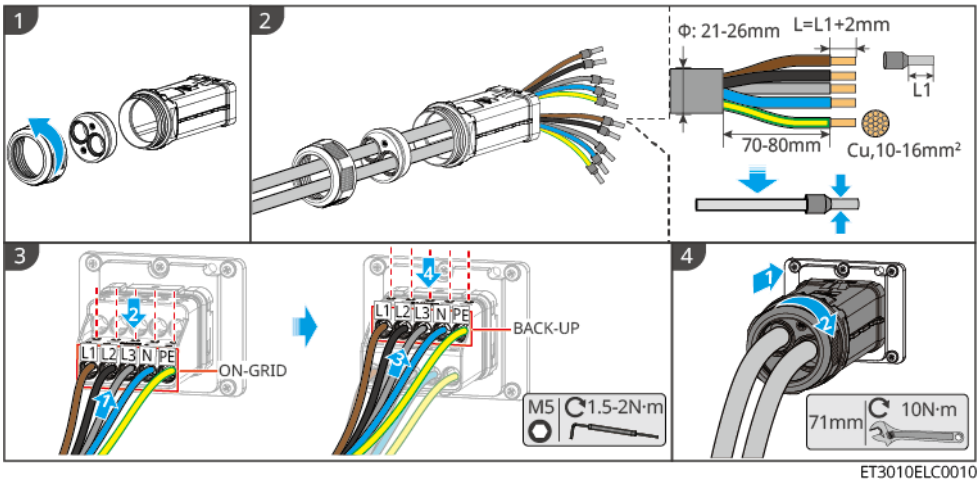

7.8 Connecting the Meter Cables

NOTE

- The meter shipped in the box is intended for use with only one inverter. Do not connect one meter to multiple inverters. If multiple inverters need to be used, please consult the manufacturer to purchase separate meters.
- Please ensure thatCTis connected in the correct direction and phase sequence; otherwise, the monitoring data may be incorrect.
- Ensure that all cables are correctly and securely connected and not loose. Improper wiring may cause poor contact or damage the meter.
- In areas with lightning hazards, if the meter cable length exceeds10mand the cable is not routed in grounded metal conduit, it is recommended to install external lightning protection devices.

GM3000Meter Wiring

NOTE

- The outer diameter of the AC power line must be smaller thanCT's aperture, ensuring the AC power line can pass throughCT。
- To ensureCTcurrent measurement accuracy, theCTcable length is recommended not to exceed30m。
- Do not use a network cable as theCTcable; otherwise, excessive current may damage the meter.
- Provided by the equipment manufacturer, theCTmay vary slightly in dimensions and appearance depending on the model, but the installation and wiring methods are the same.

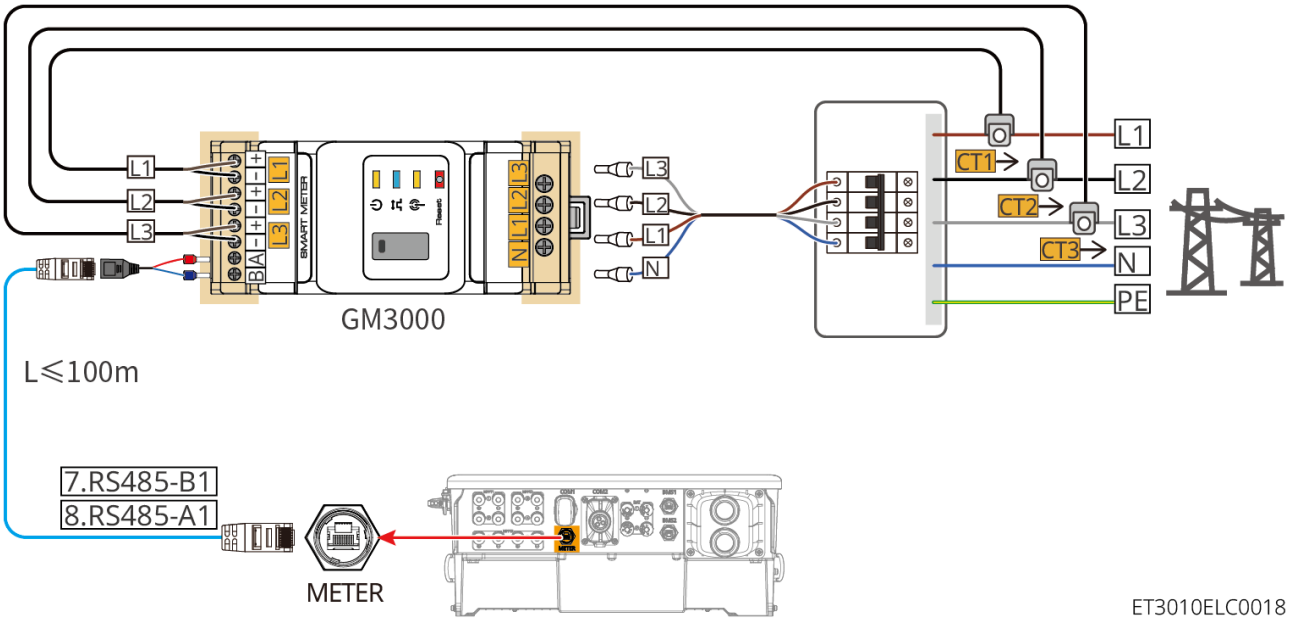

ET3010ELC0018

Wiring Steps

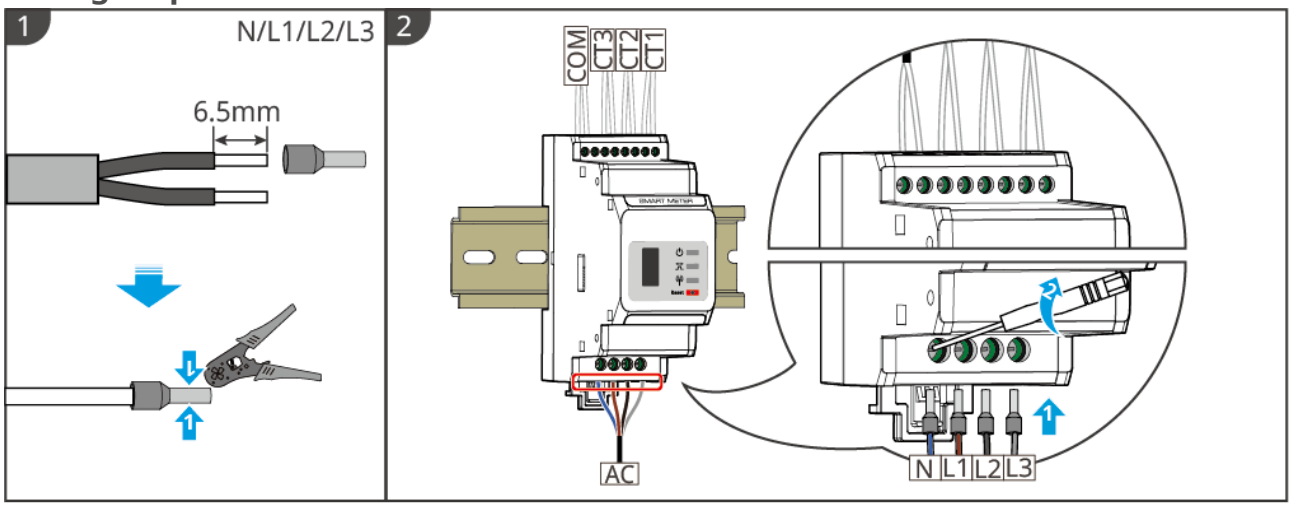

GMK10ELC0003

GM330 & GMK330 Meter Wiring

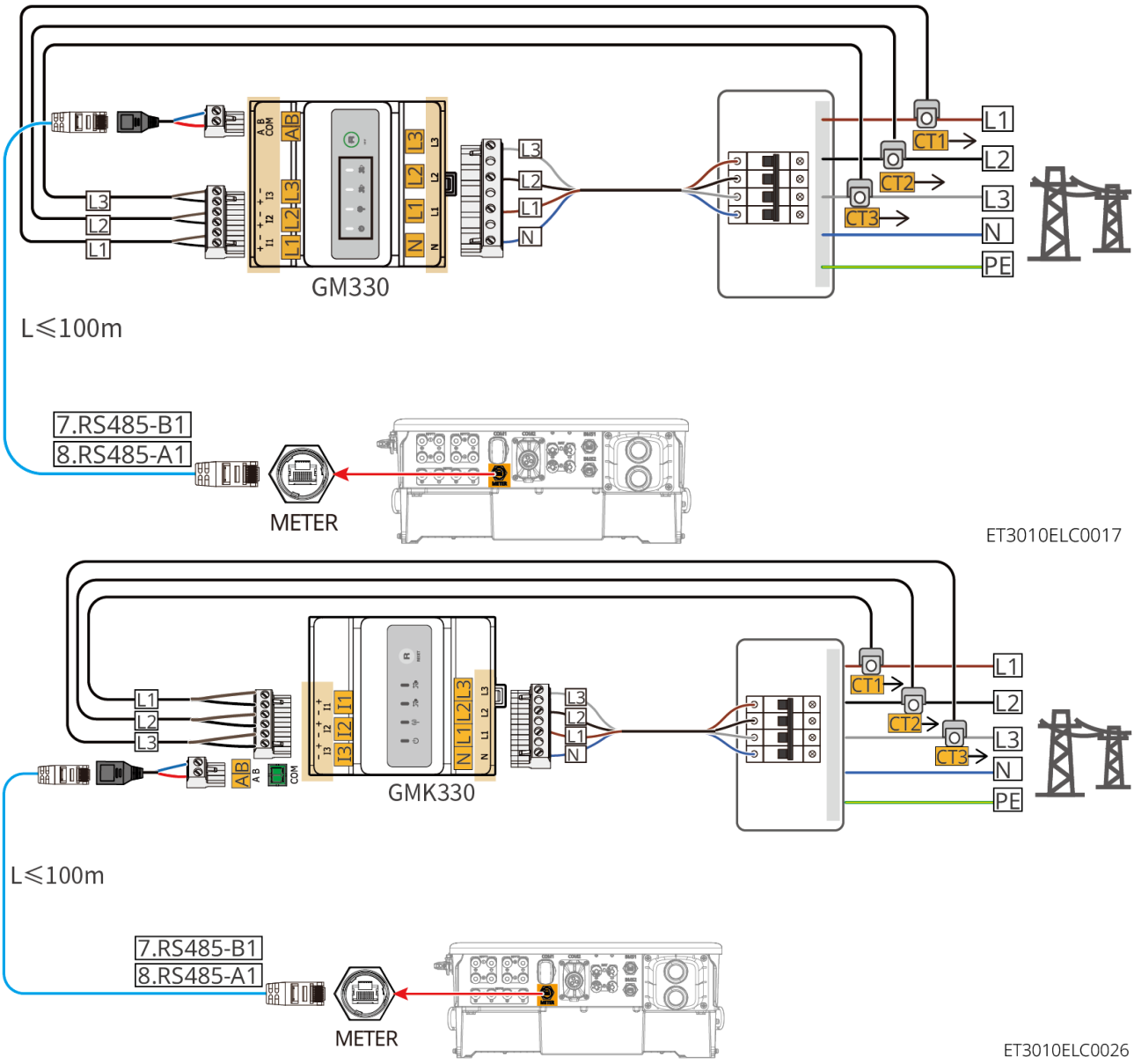

Wiring Steps

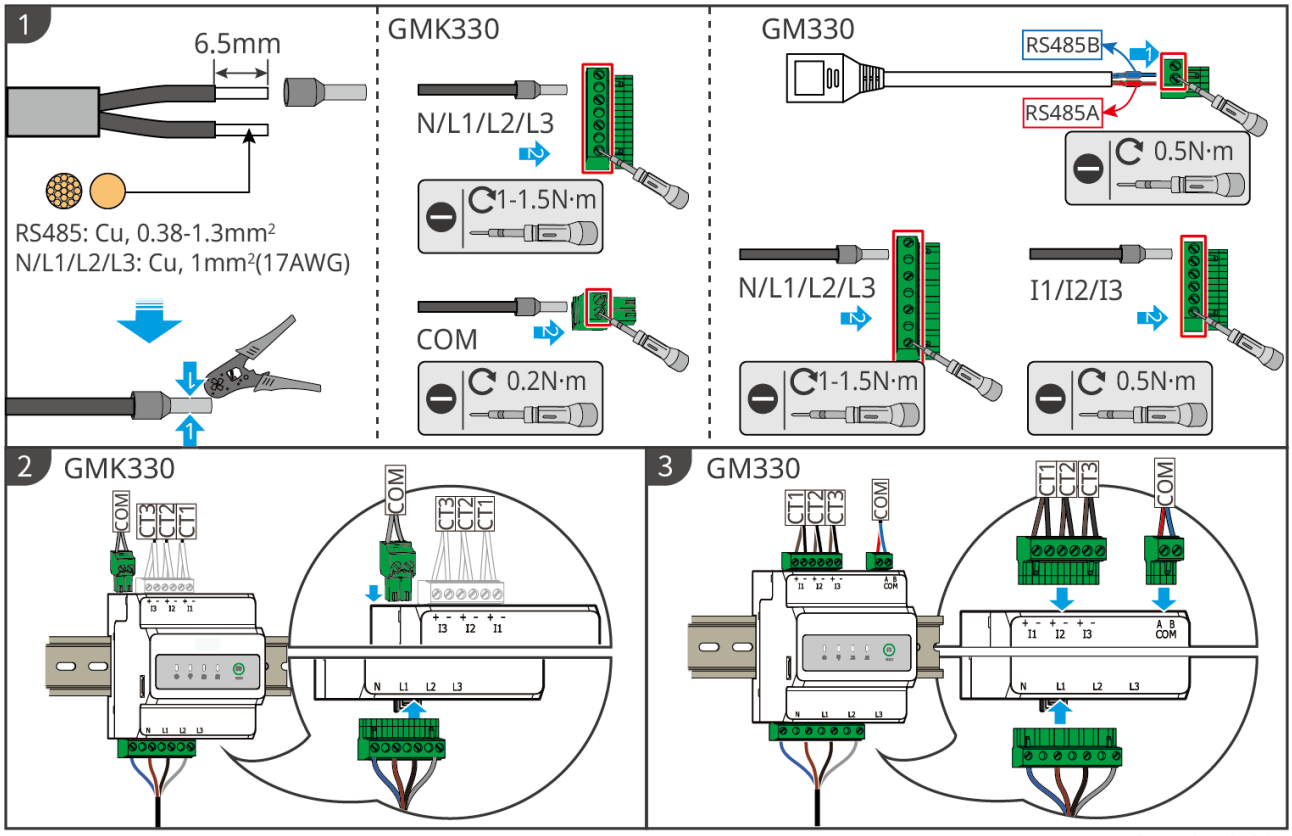

GMK10ELC0027

Installing CT (Type 1)

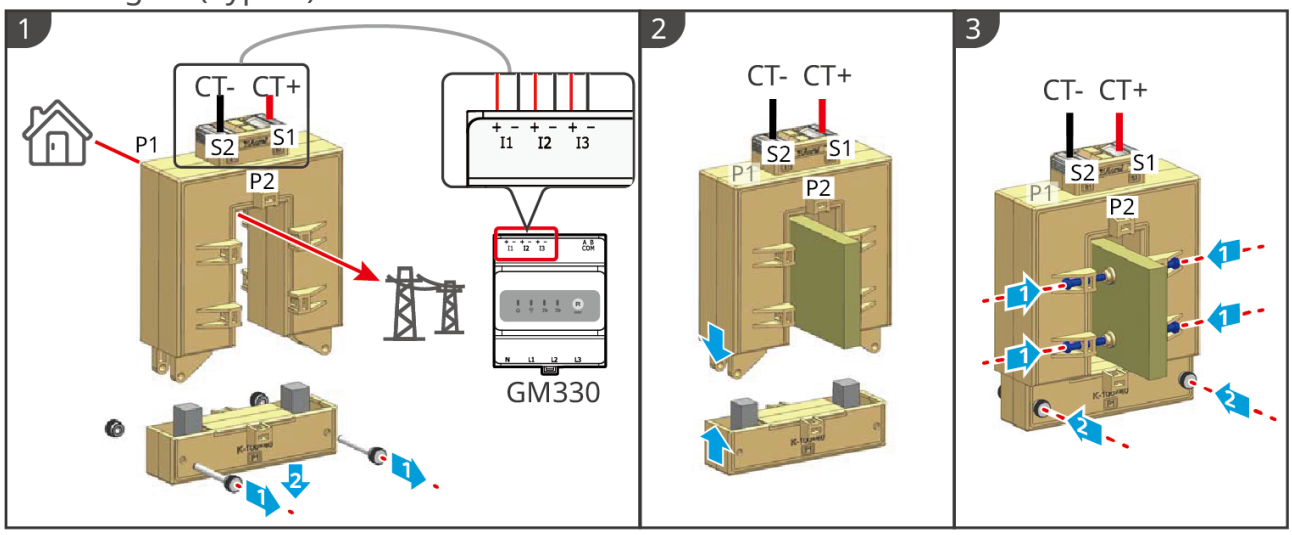

GMK10ELC0006

Installing CT (Type 2)

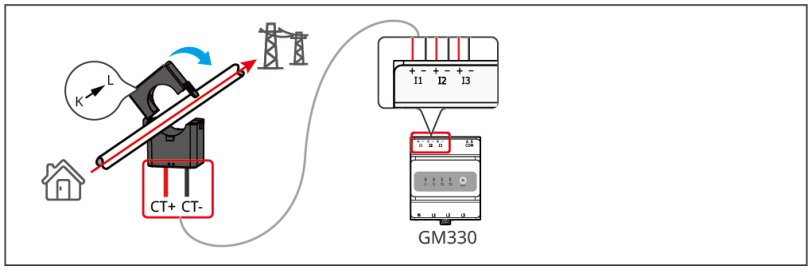

GMK10ELC0007

7.9 Connecting the Inverter Communication Cable

NOTE

- To ensure proper operation of the meter and CT, ensure the following:
  - Ensure that the CTs are connected to the corresponding phase lines: CT1 to L1, CT2 to L2, and CT3 to L3.
  - Connect according to the CT direction indicator; otherwise, a CT reverse fault may occur.
  - When replacing or maintaining the CT later, use the Meter/CT Auxiliary Detection function in the SolarGo App to allow the inverter to re-adapt to the CT sampled current direction.
- If you need to useDRED、RCRor the Remote Shutdown function, after wiring is complete, enable this function in theSolarGo App.
- If the inverter is Not Connected toDREDequipment or Remote Shutdown equipment, do not enable this function in theSolarGo App, otherwise the inverter cannot operate connected to the grid.
- In a parallel system, to implement the DRED and RCR functions, only connect the DRED and RCR communication cables to the master inverter.
- InverterDOsignal communication port can be connected to dry contact signals with the following specifications:Max≤24Vdc，1A。
- The inverter supports connection to a mobile phone or web interface via 4G, Bluetooth, WiFi, and LAN communication methods to set device-related parameters, view device operating information and error information, and stay informed of the system status in a timely manner.
- In a standalone system, a WiFi/LAN Kit-20 or 4G Kit-CN-G20 smart communication stick can be installed.
- In a parallel system, both the master and slave inverters must be equipped with WiFi/LAN Kit-20 smart communication sticks for networking.
- When using the 4G Kit-CN-G20:

NOTE

  - If Parallel Networking is required, please contact GoodWe to purchase WiFi/LAN Kit-20.
  - In China, a Micro-SIM card is standard, and the carrier is China Mobile. Ensure that the device is installed in an area covered by the carrier's signal. If local China Mobile signal coverage is unavailable, please contact the carrier to optimize the signal.
  - Supports connection to third-party monitoring platforms via the MQTT communication protocol.
- The 4G Kit-CN-G20 is an LTE single-antenna device, suitable for application scenarios with lower data transmission rate requirements.
- To use dual meters for grid-tied inverter power generation monitoring and load power consumption monitoring, please use an RJ45 splitter for connection. TheRJ45 splitter is self-provided or contact GoodWe to purchase.
- To ensure the inverter's waterproof rating, do not remove the waterproof plugs from unused communication ports on the inverter.
- The inverter communication function is optional; select it according to the actual application scenario.

Type 1

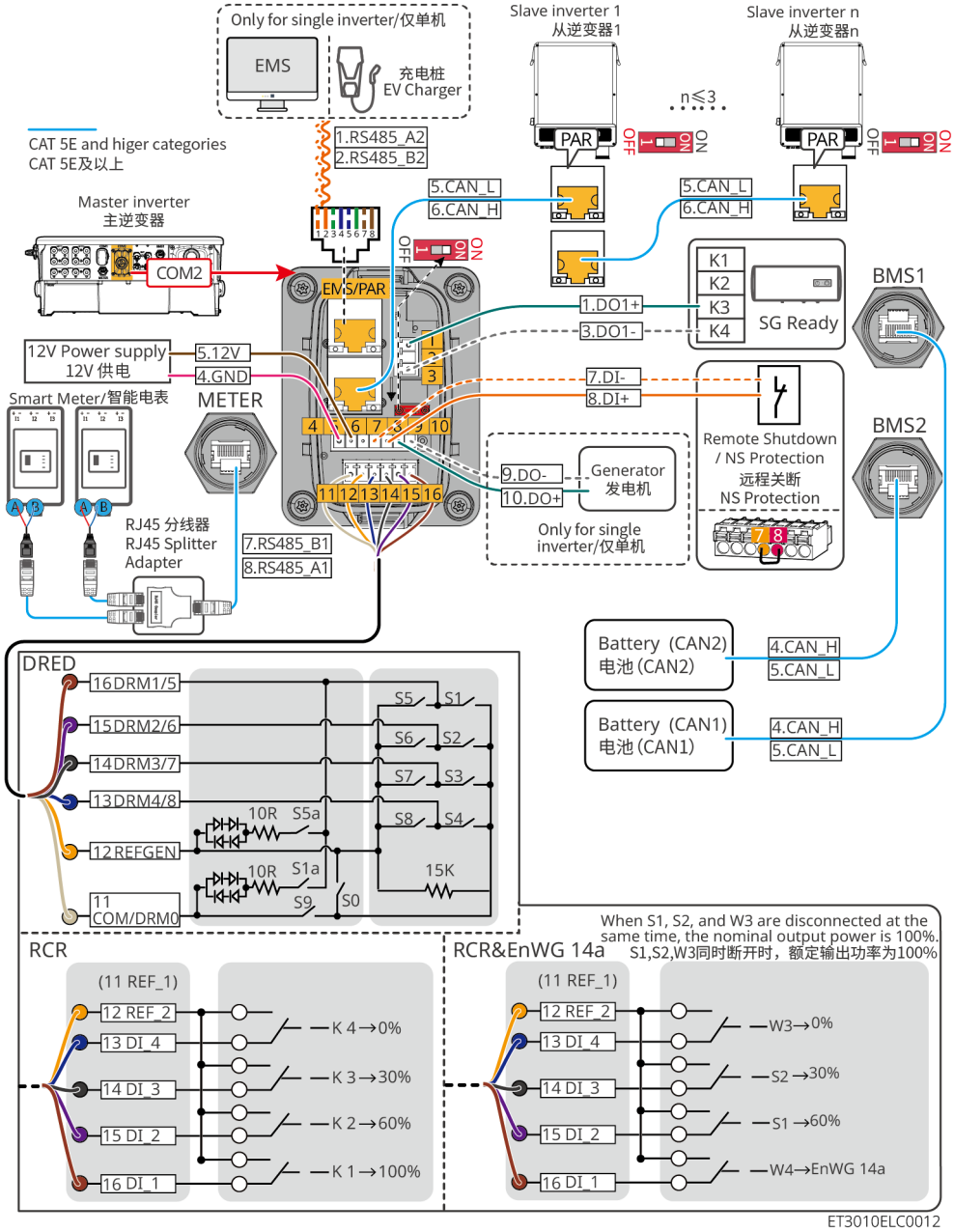
Only for single inverter/仅单机
EMS
充电桩
EV Charger
Slave inverter 1
从逆变器1
Slave inverter n
从逆变器n
n≤3
PAR
OFF
ON
CAT 5E and higer categories
CAT 5E及以上
1.RS485_A2
2.RS485_B2
5.CAN_L
6.CAN_H
Master inverter
主逆变器
COM2
EMS/PAR
1.DO1+
3.DO1-
K1
K2
K3
K4
SG Ready
BMS1
BMS2
12V Power supply
12V 供电
5.12V
4.GND
Smart Meter/智能电表
METER
7.DI-
8.DI+
Remote Shutdown
/ NS Protection
远程关断
NS Protection
9.DO-
10.DO+
Generator
发电机
Only for single
inverter/仅单机
RJ45 分线器
RJ45 Splitter
Adapter
7.RS485_B1
8.RS485_A1
Battery (CAN2)
电池(CAN2)
4.CAN_H
5.CAN_L
Battery (CAN1)
电池(CAN1)
DRED
16 DRM1/5
15 DRM2/6
14 DRM3/7
13 DRM4/8
12 REFGEN
11
COM/DRM0
10R
S5a
S1a
S9
S0
15K
When S1, S2, and W3 are disconnected at the same time, the nominal output power is 100%.
S1,S2,W3同时断开时，额定输出功率为100%
RCR
RCR&EnWG 14a
(11 REF_1)
12 REF_2
13 DI_4
14 DI_3
15 DI_2
16 DI_1
K 4→0%
K 3→30%
K 2→60%
K 1→100%
W3→0%
S2→30%
S1→60%
W4→EnWG 14a
ET3010ELC0012

Type 2

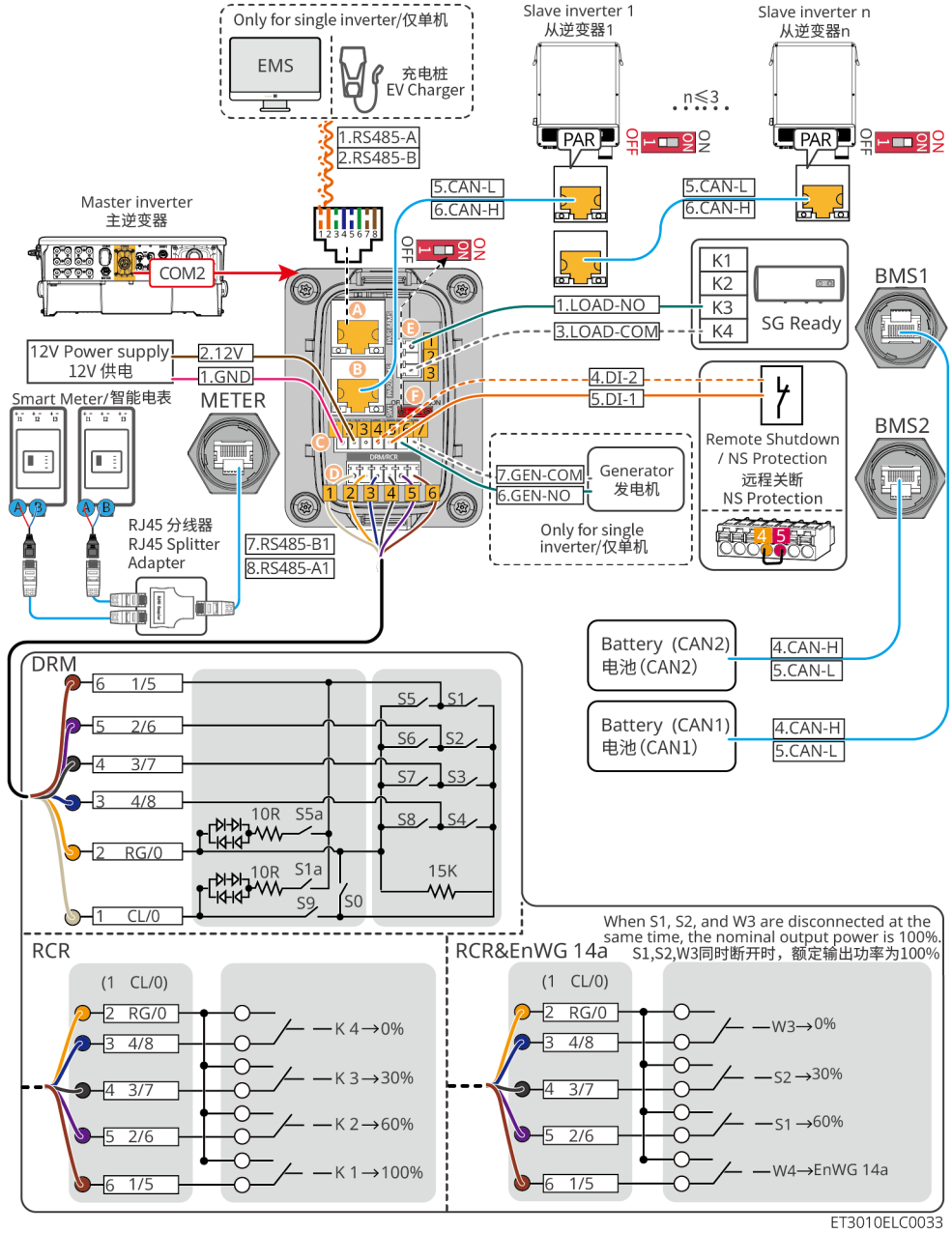
Only for single inverter/仅单机
EMS
充电桩
EV Charger
1.RS485-A
2.RS485-B
Slave inverter 1
从逆变器1
Slave inverter n
从逆变器n
n≤3
PAR
OFF
ON
5.CAN-L
6.CAN-H
Master inverter
主逆变器
COM2
12V Power supply
12V 供电
2.12V
1.GND
Smart Meter/智能电表
METER
RJ45 分线器
RJ45 Splitter
Adapter
7.RS485-B1
8.RS485-A1
1.LOAD-NO
3.LOAD-COM
K1
K2
K3
K4
SG Ready
BMS1
BMS2
4.DI-2
5.DI-1
Remote Shutdown
/ NS Protection
远程关断
NS Protection
7.GEN-COM
6.GEN-NO
Generator
发电机
Only for single
inverter/仅单机
Battery (CAN2)
电池(CAN2)
Battery (CAN1)
电池(CAN1)
4.CAN-H
5.CAN-L
DRM
6 1/5
5 2/6
4 3/7
3 4/8
2 RG/0
1 CL/0
10R S5a
10R S1a
S9
S0
15K
S5 S1
S6 S2
S7 S3
S8 S4
When S1, S2, and W3 are disconnected at the same time, the nominal output power is 100%.
S1,S2,W3同时断开时，额定输出功率为100%
RCR
(1 CL/0)
K 4→0%
K 3→30%
K 2→60%
K 1→100%
RCR&EnWG 14a
W3→0%
S2→30%
S1→60%
W4→EnWG 14a
ET3010ELC0033

Silkscreen	Function	Description
DO / LOAD	Load Control (SG Ready)	• Supports connection of dry contact signals to implement load control and other functions.DOcontact capacity is 24V DC@1A, NO/COMnormally open contact. • SupportsSG Readyheat pump connection, and controls the heat pump via dry contact signals. • Supported Operating Modes: ◦ Operating mode2(signal:0:0）：Energy-saving Mode. In this mode, the heat pump operates in Energy-saving Mode. ◦ Operating mode3(signal:0:1）：Recommendation ON. In this mode, the heat pump increases hot water reserve to store heat while maintaining its current operation.
GND 12V RSD	12Vpower supply	The inverter provides12Vpower supply port, supporting up to5Wdevice access. This port provides short-circuit Protection Function.
DI	Remote Shutdown/NSProtection	Provides a signal control port to control device Remote Shutdown or implementNSProtection Function. Remote Shutdown function: • In the event of an accident, the device can be controlled to stop operating. • The Remote Shutdown device must be a normally closed switch. • When the inverter usesRCRorDREDfunctions, ensure that the Remote Shutdown device is connected, or the Remote Shutdown port is short-circuited.

Silkscreen	Function	Description
DO2 / GEN	Diesel Generator Start/Stop Control Port	• Diesel Generator Control signal connection is supported only in single-inverter scenarios. • The Diesel Generator Control mode is disabled by default, and the dry contact signal is open-circuit; after the Control Mode is enabled, the dry contact signal becomes short-circuit.
DRM&RCR /	RCR、DREDorEnWG 14afunction connection port	• RCR （Ripple Control Receiver): providesRCRsignal control port, meeting grid dispatch requirements in Germany and other regions. • DRED （Demand Response Enabling Device): provides aDREDsignal control port, meeting theDERDCertification requirements in Australia and other regions. • EnWG（Energy Industry Act）14a: all controllable loads must accept emergency dimming from the grid. The grid operator may temporarily reduce the maximum grid import power of controllable loads to 4.2kW。
EMS/PAR/PAR-1/PAR1&EMS	• EMScommunication or EV charger communication port • Parallel communication port	• CANandBUSports: parallel communication ports. In Parallel Networking, useCANcommunication to connect other inverters; useBUSbus to control the On/Off-grid status of each inverter in the parallel system. • RS485port: used to connect third-partyEMSdevices and EV chargers. In parallel scenarios, connecting third-partyEMSdevices and EV chargers is not supported.

Silkscreen	Function	Description
EMS/PAR / PAR1&EMS / PAR2&EMS	Parallel communication port	• CANandBUSports: parallel communication ports. In Parallel Networking, useCANcommunication to connect other inverters; useBUSbus to control the On/Off-grid status of each inverter in the parallel system
S1	Parallel DIP Switch	The inverter parallel DIP switch is set toONposition by default at the factory. In a multi-inverter parallel scenario, set the parallel DIP switches of the first and last inverters toONposition, and set those of the other inverters to1position
METER	Smart meter connection port	Connect a smart meter to implement functions such as output Power Control and load monitoring.
BMS1 / BMS2	Battery communication connection port	Connect a battery that uses CAN communication. GW12KL-ET、GW15K-ET、GW20K-ET：1 GW18KL-ET、GW25K-ET、GW29.9K-ET、GW30K-ET：2

Method for connecting communication cables

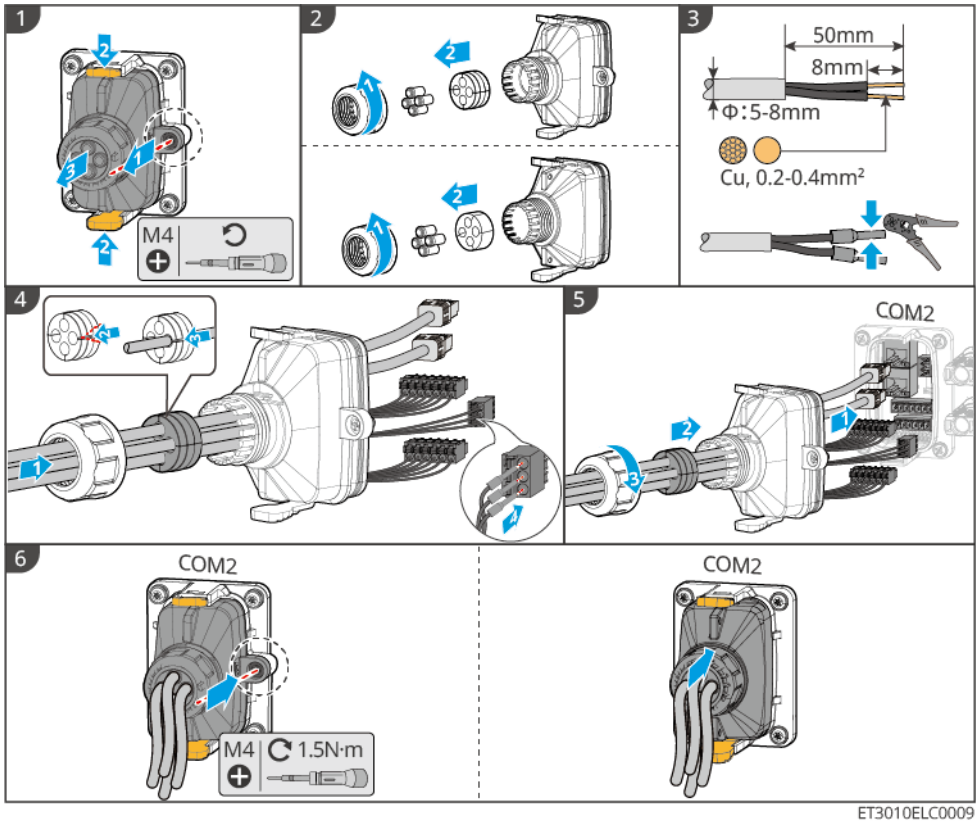

7.10 Connecting the Smart Communication Stick

NOTE

- The inverter can be connected via Bluetooth,4G、WiFi、LANSmart Communication Stick to a mobile phone orWEBinterface to set device-related parameters, view device operating information and error information, and keep informed of system status.
- When the system includes multiple inverters for Parallel Networking, the master inverter needs to be equipped with anEzlink3000Smart Communication Stick for networking.
- When the energy storage system has only one inverter, useWiFi-Kit、WiFi/LAN Kit-20or4GSmart Communication Stick.
- When selectingWiFicommunication to connect the inverter to a router, you can installWiFi-Kit、WiFi/LAN Kit-20orEzlink3000Smart Communication Stick.
- When selectingLANcommunication to connect the inverter to a router, you can installWiFi/LAN Kit-20orEzlink3000Smart Communication Stick.
- When selecting4Gcommunication to upload energy storage system operating information to the monitoring platform, you can installLS4G Kit-CN、4G Kit-CN、4G Kit-CN-G20or4G Kit-CN-G21communication modules. When selectingLS4G Kit-CNor4G Kit-CN, you need to use the Smart Communication Stick shipped with the inverter to configure the energy storage system parameters; after configuration is complete, replace it withLS4G Kit-CNor4G Kit-CNfor data transmission. When selecting4G Kit-CN-G20or4G Kit-CN-G21, please use the Bluetooth signal emitted by the module for near-end device configuration.
- 4G module is anLTEsingle-antenna device，suitable for application scenarios with low data transmission rate requirements.
- 4G module has a built-inSIMcard that is a mobile communication card. Please confirm whether the device is installed in an area with mobile4Gsignal coverage;
- 4G Kit-CN-G20or4G Kit-CN-G21communication stick: after installation, please contact the after-sales service center to bind the inverter and the communication stick. After binding, if you need to install the communication stick on another inverter, please contact the after-sales service center to unbind it first.
- To ensure4Gsignal communication quality, do not install the device indoors or in areas with metal interference to signals.

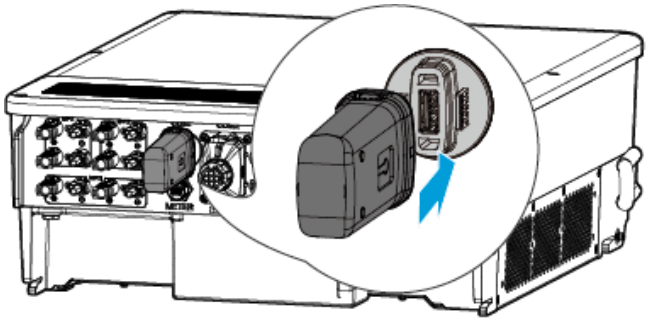

ET3010ELC0034

8 System Trial Operation

8.1 Pre-Power-on Inspection of the System

No.	Inspection items
1	The equipment is installed securely; the installation position facilitates operation and maintenance; the installation space facilitates ventilation and heat dissipation; and the installation environment is clean and tidy.
2	The Protection ground cable, DC cables, AC cables, communication cables, and terminating resistors are connected correctly and securely.
3	Cables are tied in accordance with routing requirements, reasonably distributed, and free from damage.
4	For unused cable entry holes and ports, ensure that the terminals supplied as accessories are used for reliable connection and that they have been sealed.
5	Ensure that used cable entry holes have been sealed.
6	The voltage and frequency at the inverter grid-connection point meet the grid-connection requirements.

8.2 System Power-On

⚠WARNING

- When multiple inverters are connected in parallel, ensure that all slave inverters are powered on on the AC side within one minute after the master inverter is powered on on the AC side.
- When multiple battery systems are paralleled in clusters, ensure that the QF2 switches of all battery systems are closed within five minutes.
  When multiple battery systems are paralleled in clusters, before closing QF1, ensure that the SolarGo App correctly displays the number of paralleled battery clusters; otherwise, the battery systems may be damaged.

NOTE

In a PV system, when no PV power is generated and the grid is abnormal, if the inverter cannot operate normally, the battery black-start function can be used to force the battery to discharge and start the inverter. The inverter can then enter off-grid mode and supply power to loads from the battery.

- BATSeries 92.1-112.6kWh For the black start procedure of the commercial and industrial battery system, refer to the power-on and power-off steps.
- For other batteries, the black start procedure is the same as the power-on steps.

BATSeries 92.1-112.6kWh Commercial and industrial battery system: Before power-on, ensure that the battery's EPO switch is in the released state. Release procedure: rotate the EPO switch clockwise.



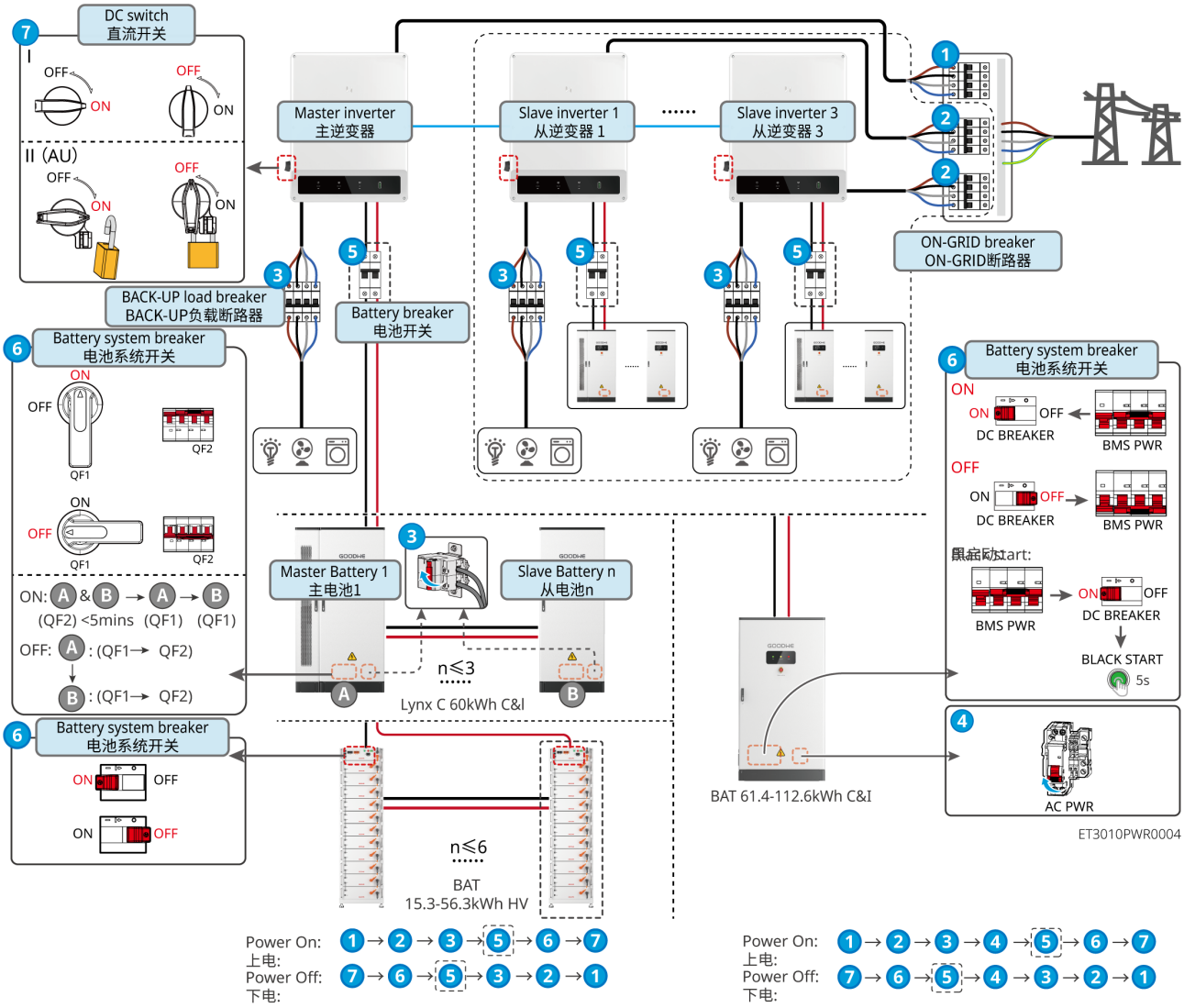

⑤: Optional according to local laws and regulations.

8.3 Indicator Light Introduction

8.3.1 Inverter Indicators

Indicator light	Status	Description
		The inverter is powered on and in standby mode
		The inverter is starting up and in self-check mode
		The inverter is operating normally in grid-connected generation mode or off-grid mode

Indicator light	Status	Description
		BACK-UP output Overload
		System Fault
		Inverter is powered off
		Grid abnormal; inverter BACK-UP port is supplying power normally
		Grid normal; inverter BACK-UP port is supplying power normally
		No power output from BACK-UP port
		Inverter monitoring module is resetting
		No connection established between inverter and communication terminal
		Communication fault between communication terminal and cloud server
		Inverter monitoring is normal
		Inverter monitoring module is not started

8.3.2 Battery Indicator

- **Lynx C Series 60 Kwh Commercial and Industrial Battery System**

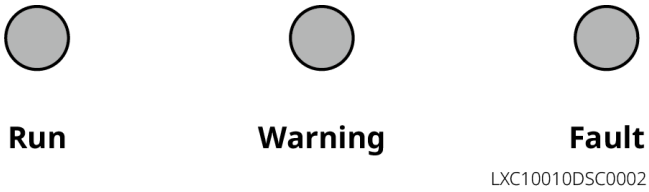

LXC10010DSC0002

Indicator light	Status	Description
Run		Green LED solid on: Device operating normally
		Green LED flashes once: Battery operating normally, not communicating with the inverter
		Green LED flashes twice: Device in standby

Indicator light	Status	Description
		Green LED off, yellow LED solid on: Device alarm Green LED off, red LED solid on: Device fault Green, yellow, and red LEDs all off: Device not powered on
Warning		Solid on: Device alarm
		Off: Device has no alarm
Fault		Solid on: Device fault
		Off: Device has no fault

- **BAT-SSeries 15.3-56.3Kwh High-Voltage Battery**



BAT10DSC0003

Indicator light	Status	Description
RUN		Green LED solid on: Device operating normally
		Green LED flashes once: Battery operating normally, not communicating with the inverter
		Green LED flashes twice: Device in standby
FAULT		Solid on: Device fault
		Red LED flashes once: System undervoltage3~4-level
		Red LED flashes twice: SNabnormal

- **BAT-C Series 61.4–112.6 Kwh Commercial and Industrial Battery System**

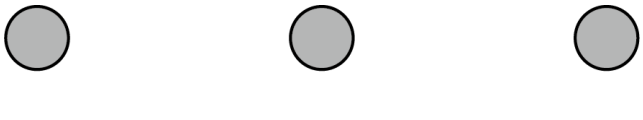

LXC10010DSC0002

Indicator light	Status	Description
Run		Green LED solid on: Device operating normally
		Green LED flashes once: Battery operating normally, not communicating with the inverter
		Green LED flashes twice: Device in standby
		Green LED off, yellow LED solid on: Device alarm Green LED off, red LED solid on: Device fault Green, yellow, and red LEDs all off: Device not powered on
Warning		Solid on: Device alarm
		Off: Device has no alarm
Fault		Solid on: Device fault
		Off: Device has no fault
		Red single flash: Sleep (undervoltage)

8.3.3 Smart Meter Indicator Light

GM330&GMK330

A	Status	Description
Power LED	Steady on	Meter powered on, no RS485 communication
	Flashing	Meter powered on, RS485 communication normal
	Off	Meter powered off
	Off	Reserved

A	Status	Description
Communication LED 	Flashing	Press and hold the Reset button for ≥5 s; the Power LED and Buy/Export Energy LED flash: Meter reset
Buy/Export Energy LED 	Steady on	Import energy from the grid
	Flashing	Export Energy to the grid
	Off	No import, no Export Energy
	Reserved	

GM3000

A	Status	Description
Power LED 	Steady on	Meter powered on
	Off	Meter powered off
Buy/Export Energy LED 	Steady on	Import energy from the grid
	Flashing	Export Energy to the grid
Communication LED 	Flashing	Communication normal
	Continuous flashing5th	• PressResetbutton<3s: Meter reset • PressResetbutton5s: Meter parameters restored to factory defaults • PressResetbutton>10s: Meter parameters restored to factory defaults, energy data cleared
	Off	No meter communication

8.3.4 Smart Communication Stick LED

- **Wi-Fi Kit**

Indicator light	Color	Status	Description
Power LED 	Green	On	Wi-Fi Kitis powered on.
		Off	Wi-Fi KitNot powered on or restarting.
Communication LED 	Blue	On	WiFi APHotspot has been connected.
		Off	• Wi-Fi KitCommunication error. • Wi-Fi KitRestarting.

- **WiFi/LAN Kit-20**

NOTE
• After double-clicking the Reload button to enable Bluetooth, the communication indicator changes to single-blink status. Please connect to the SolarGo app within 5 minutes; otherwise, Bluetooth will automatically turn off. • The communication indicator's single-blink status appears only after double-clicking the Reload button to enable Bluetooth.

Indicator light	Status	Description
Power LED 		Steady on: The Smart Communication Stick is powered on.
		Off: The Smart Communication Stick is not powered on.
Communication LED 		Steady on: Communication in Wi-Fi mode or LAN mode is normal.
		Single blink: The Smart Communication Stick's Bluetooth signal is enabled and waiting for connection to the SolarGo app.
		Two blinks: The Smart Communication Stick is Not Connected to the router.

Indicator light	Status	Description
		Four blinks: The Smart Communication Stick communicates normally with the router but is Not Connected to the server.
		Six blinks: The Smart Communication Stick is identifying connected devices.
		Off: The Smart Communication Stick is undergoing a software reset or is not powered on.

Indicator light	Color	Status	Description
LAN port communication indicator 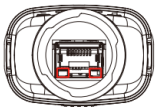	Green	Steady on	100 Mbps wired network connection is normal.
		Off	• Network cable Not Connected. • 100 Mbps wired network connection is abnormal. • 10 Mbps wired network connection is normal.
	Yellow	Steady on	10/100 Mbps wired network connection is normal; no communication data is being sent or received.
		Flashing	Communication data is being sent and received.
		Off	Network cable Not Connected.

button	Description
Reload	Press and hold for 0.5–3 seconds to reset the Smart Communication Stick.
	Press and hold for 6–20 seconds to restore the Smart Communication Stick to factory settings.
	Quickly double-click to enable the Bluetooth signal (remains active for only 5 minutes).

- **4G Kit-CN-G20 & 4G Kit-CN-G21**

Indicator light	Status	Description
		Steady on: The Smart Communication Stick is powered on.
		Off: The Smart Communication Stick is not powered on.
		Steady on: The Smart Communication Stick is connected to the server, and communication is normal.
		Double blink: The Smart Communication Stick is Not Connected to the communication base station.
		Four flashes: The smart communication stick is connected to the communication base station and Not Connected to the server.
		Six flashes: Communication between the smart communication stick and the inverter is disconnected.
		Off: The Smart Communication Stick is undergoing a software reset or is not powered on.

button	Description
RELOAD	Press and hold for 0.5-3 seconds; the smart communication stick will restart.
	Press and hold for 6–20 seconds to restore the Smart Communication Stick to factory settings.

- **LS4G Kit-CN、4G Kit-CN**

Indicator light	Color	Status	Description
Power LED 	Green	On	The module is fastened and powered on.
		Off	The module is not fastened or not powered on.

Communication LED	Blue	Slow flashing (0.2s on,1.8soff)	• Inverter communication LED2flashes: dialing, searching for network • Inverter communication LED4flashes: connection to cloud failed due to no data traffic
		Slow flashing (1.8ss on,0.2soff)	• Inverter communication LED2flashes: dialing successful • Inverter communication LED steady on: cloud connection successful • Inverter communication LED4flashes: connection to cloud failed due to no data traffic
		Fast flashing (0.125ss on,0.125soff)	The inverter is communicating with the cloud through the module
		0.2ss on,8sOff	Not installedSIMcard orSIMcard has poor contact

- **Ezlink3000**

Indicator light/Silkscreen	Color	Status	Description
Power LED	Blue		Flashing: The communication stick is operating normally.
			Off: The communication stick is powered down.
Communication LED	Green		Steady on: The communication stick is connected to the server.
			Double flash: The communication stick is Not Connected to the router.
			Four flashes: The communication stick is connected to the router and Not Connected to the server.

RELOAD	-	-	Short press1-3seconds to restart the communication stick. Long press6-10seconds to restore factory settings. Quickly double-click to enable Bluetooth signal (maintained for only5minutes).

8.4 Close the Cabinet Door

- **Lynx C Series 60Kwh Commercial and Industrial Battery System**

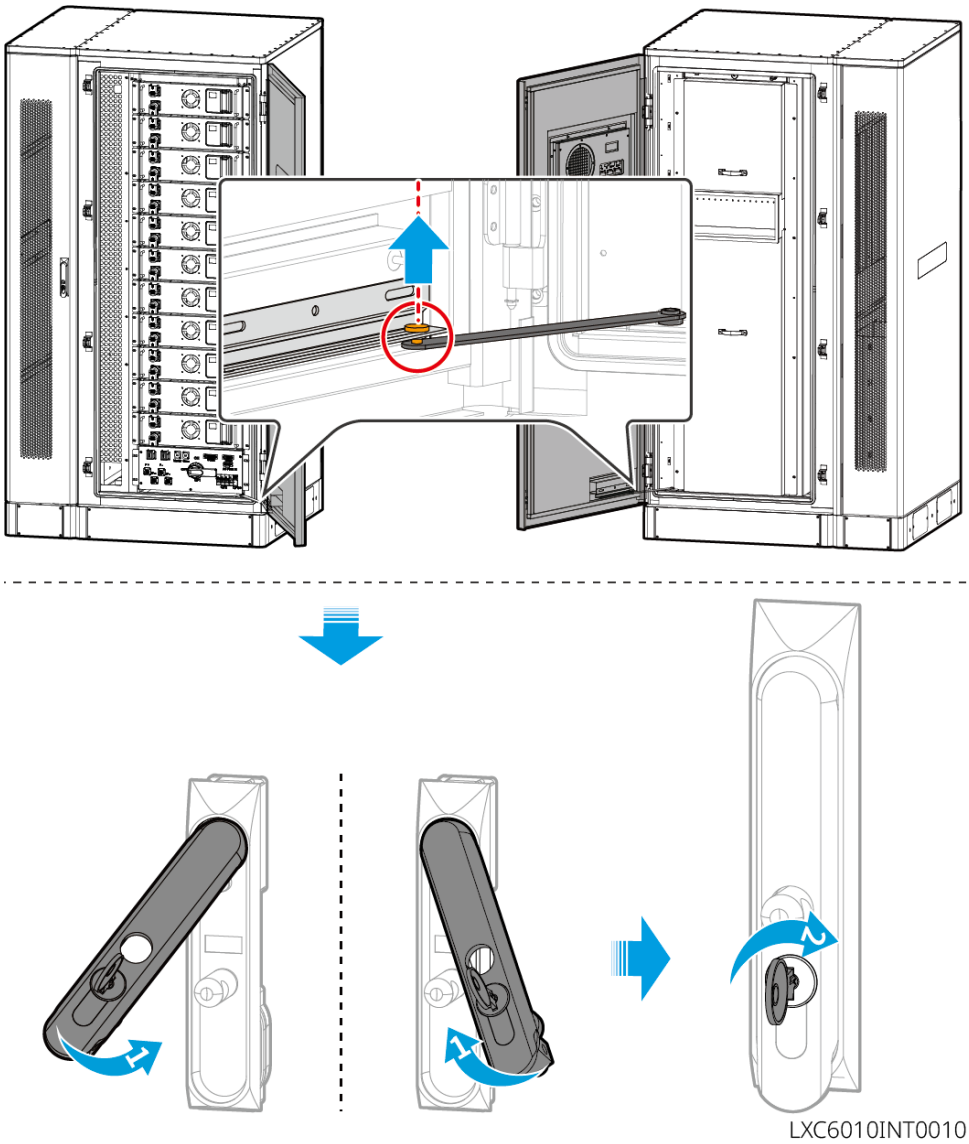

- **BAT-CSeries 61.4-112.6Kwh Commercial and Industrial Battery System**

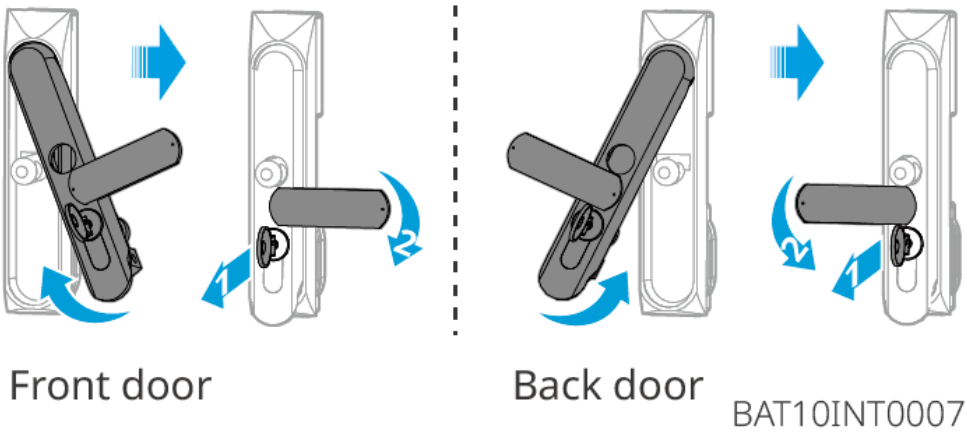

Front door Back door BAT10INT0007

9 System Commissioning and Plant Monitoring

9.1 Device Commissioning and Plant Monitoring via the SEMS+ App

The SEMS+ App is software for remote plant monitoring or local device commissioning. It supports installers or owners:

- Remotely monitor plant operation and set plant and device operating parameters.
- Connect to devices locally to view device operation status and set device parameters.

Download and install the SEMS+ App
Phone requirements:

- Phone operating system requirements: Android 7.0 or later, iOS 15.1 or later.
- The phone must support a web browser and Internet access.
- The phone must support WLAN/Bluetooth functions.

Download methods:
Method 1:
Search for SEMS+ in Google Play, App Store, Huawei, HONOR, Xiaomi, OPPO, and vivo app stores to download and install it.



SEMS0163

Method 2:
Scan the QR code below to download and install it.

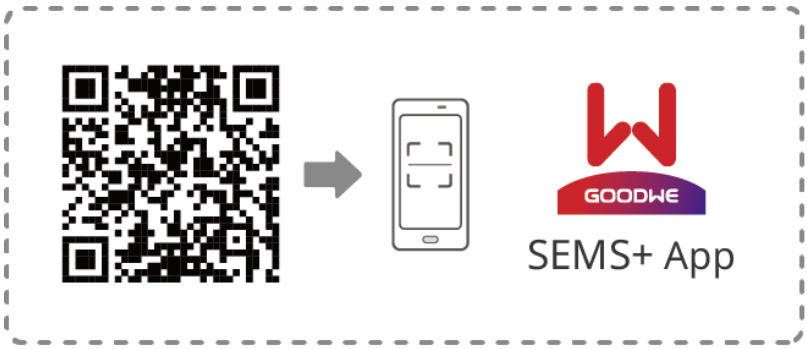

SEMS0164

For detailed functions, refer to theSEMS+ App User Manual. The user manual is available on the official website or by scanning the QR code below.

SEMS+ App User Manual

9.2 Device Commissioning and Plant Monitoring via SEMS+ WEB

SEMS+ WEB is a monitoring platform that can communicate via Wi-Fi or LAN. The following are common features of SEMS+ WEB:

1. Manage organization or user information, etc.
2. Add and monitor plant information, etc.
3. Maintain devices.

For detailed functions, refer to theSEMS+ WEB User Manual。

SEMS+ WEB User Manual

10 System Maintenance

10.1 System Power-Off

⚠DANGER

- When operating and maintaining devices in the system, power down the system. Operating devices while energized may cause equipment damage or electric shock hazards.
- After the equipment is powered off, it takes time for internal components to discharge. Wait according to the time specified on the label until the equipment is fully discharged.
- The battery should be restarted by powering it on via the air circuit breaker.
- When shutting down the battery system, strictly follow the battery system power-off requirements to prevent damage to the battery system.
- When there are multiple batteries in the system, powering off any one battery will power off all batteries.

NOTE

- Circuit breakers between the inverter and the battery, and between battery systems, must be installed in accordance with local laws and regulations.
- To ensure effective protection of the battery system, keep the cover of the battery system switch closed. The protective cover can close automatically after being opened. If the battery system switch is not used for a long time, secure it with screws.

Power-off Procedure

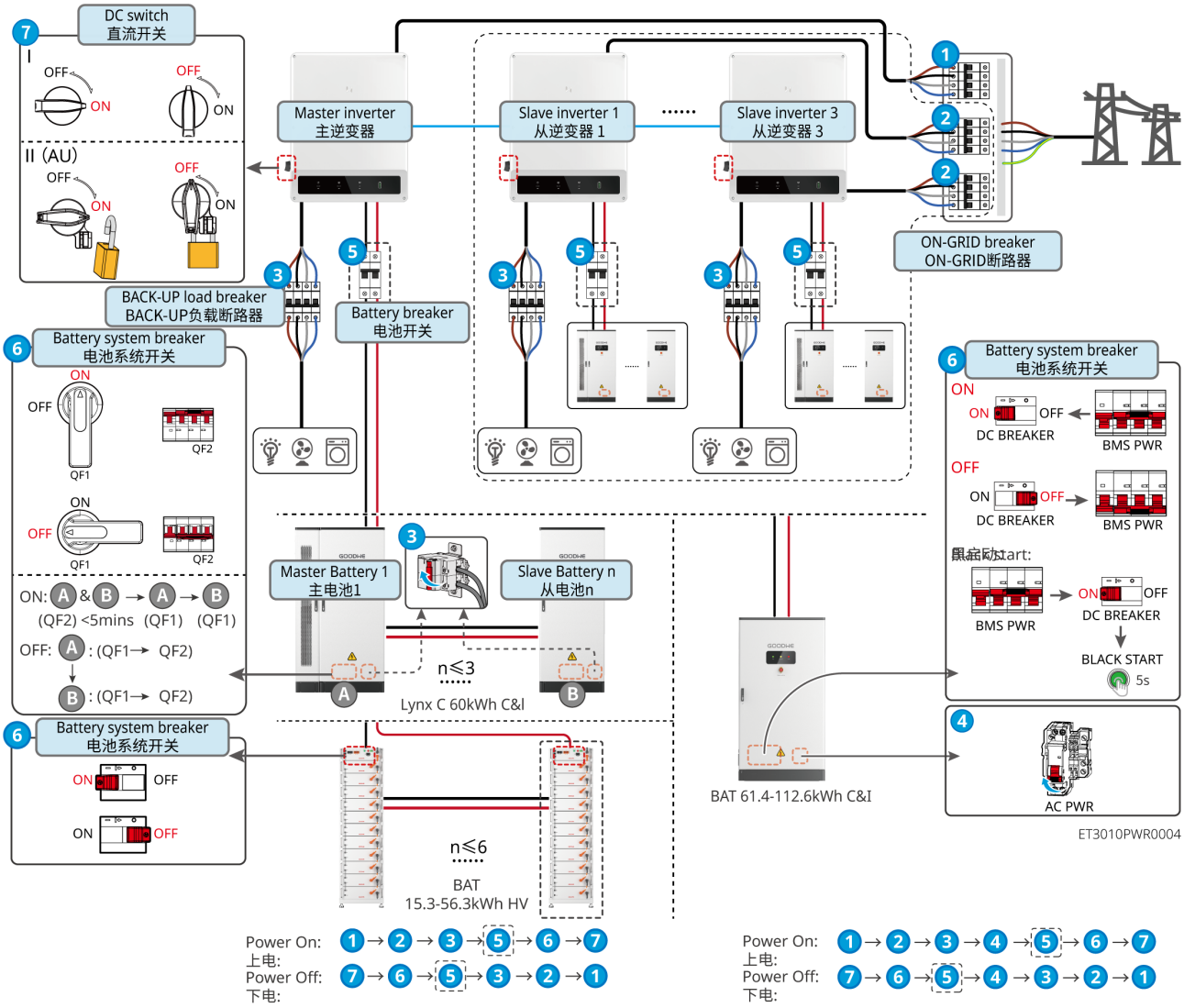

❺: Optional according to local laws and regulations.

10.2 Equipment Dismantling

DANGER

- Ensure that the equipment is powered off.
- Wear personal protective equipment when operating the equipment.
- Use proper removal tools when removing wiring terminals to avoid damaging terminals or equipment.
- Unless otherwise specified, the equipment dismantling method is the reverse of the installation method, which is not repeated in this document.

1. Power off the system.
2. Label the cables connected in the system to indicate cable types.
3. Disconnect the cables connecting the inverter, battery, and smart meter in the system, such as DC cables, AC cables, communication cables, and Protection earth cables.
4. Remove devices such as the smart communication stick, inverter, battery, and smart meter.
5. Store the equipment properly. If it will be put into use later, ensure that storage conditions meet the requirements.

10.3 Equipment Disposal

If the equipment can no longer be used and needs to be scrapped, dispose of it in accordance with the electrical waste disposal requirements of the laws and regulations in the country/region where the equipment is located. Do not dispose of the equipment as household waste.

10.4 Regular Maintenance

⚠WARNING

- If any issue that may affect the battery or energy storage inverter system is found, contact after-sales personnel. Do not disassemble it without authorization.
- If exposed copper wires inside the conductive cable are found, do not touch them. High voltage hazard. Contact after-sales personnel. Do not disassemble without authorization.
- If other emergencies occur, contact after-sales personnel immediately, operate under their guidance, or wait for after-sales personnel to operate on site.

Maintenance item	Maintenance method	Maintenance interval	Maintenance purpose
System cleaning	Check the heat sinks, fans, and air inlet/outlet for foreign objects and dust. Check whether the installation space meets the requirements and whether debris has accumulated around the equipment.	Once every 6 months	Prevent heat dissipation failures.
System installation	Check whether the equipment is installed securely and whether the fastening screws are loose. Check the equipment for external damage or deformation.	Once every 6 months to once a year	Confirm that the equipment is installed securely.
Electrical connections	Check whether electrical connections are loose, cables are damaged, or copper is exposed.	Once every 6 months to once a year	Confirm the reliability of electrical connections.
Sealing performance	Check whether the sealing of the equipment's cable entry holes meets requirements. If gaps are too large or the holes are not sealed, re-seal them.	Once a year	Confirm that the machine is properly sealed and the waterproofing performance is intact.
Battery maintenance	If the battery has not been used or fully charged for a long time, regular charging of the battery is recommended.	Once every 15 days	Protection of battery service life.

10.5 Faults

NOTE
The fault information in this manual is updated irregularly, and faults may vary slightly by model. Please refer to the device's real-time display for details.

10.5.1 View Fault/Alarm Details

All fault and alarm details of the energy storage system are displayed in [SEMS+ App] and [SEMS+ WEB]. If your product is abnormal and relevant fault information is not displayed in [SEMS+ App] and [SEMS+ WEB], please contact the after-sales service center.

- SEMS+ App

1. Open the SEMS App and log in with any account.
2. Go to [Plant] > [Alarm] to view fault information for all plants.
3. Click the specific fault name to view the time when the fault occurred, possible causes, and solutions.

- SEMS+ WEB

1. Open SEMS+ WEB and log in with any account.
2. On the plant details page, click [Alarm] to view all alarm information for the current plant.

10.5.2 Fault Information and Handling Methods

Please perform troubleshooting according to the following methods. If the troubleshooting methods do not resolve your issue, please contact the after-sales service center.
When contacting the after-sales service center, please collect the following information to facilitate rapid problem resolution.

1. Product information, such as serial number, software version, device installation date, fault occurrence time, fault occurrence frequency, etc.
2. Device installation environment, such as weather conditions, whether the modules are shaded or have shadows, etc. For the installation environment, it is recommended to provide photos, videos, and other files to assist in problem analysis.

3. Grid conditions.

10.5.2.1 System Fault

If an unlisted problem occurs in the system, or if following the instructions still cannot prevent the problem or abnormality, stop operating the system immediately and contact your dealer immediately.

No.	Faults	Corrective measures
1	Unable to find the Smart Communication Stick wireless signal	1. Ensure that no other device is connected to the Smart Communication Stick wireless signal. 2. Ensure that the App has been upgraded to the latest version. 3. Ensure that the Smart Communication Stick is powered properly and the blue indicator light is flashing or steady on. 4. Ensure that the smart device is within the communication range of the Smart Communication Stick. 5. Refresh the device list in the App. 6. Restart the inverter.
2	Unable to connect to the Smart Communication Stick wireless signal	1. Ensure that no other device is connected to the Smart Communication Stick wireless signal. 2. Restart the inverter or the communication stick, and try to connect to the Smart Communication Stick wireless signal again. 3. Ensure that Bluetooth encrypted pairing is successful.
3	Unable to find the router SSID	1. Place the router closer to the Smart Communication Stick, or add a Wi-Fi repeater to enhance the Wi-Fi signal. 2. Reduce the number of devices connected to the router.

No.	Faults	Corrective measures
4	After all configurations are complete, the Smart Communication Stick fails to connect to the router	1. Restart the inverter. 2. Check whether the network name, encryption method, and password in the Wi-Fi configuration are the same as those of the router. 3. Restart the router. 4. Place the router closer to the Smart Communication Stick, or add a Wi-Fi repeater to enhance the Wi-Fi signal.
5	After all configurations are complete, the Smart Communication Stick fails to connect to the server	Restart the router and inverter.

10.5.2.2 Inverter Fault

10.5.2.2.1 Fault Handling (Fault Codes F01-F40)

Fault Code	Fault Name	Fault Cause	Fault Handling Recommendations
F01	Grid Power Outage	1. Grid power outage. 2. AC line or AC Switch is disconnected.	1. The alarm automatically clears after grid power supply is restored. 2. Check whether the AC line or AC Switch is disconnected.

Fault Code	Fault Name	Fault Cause	Fault Handling Recommendations
F02	Grid Overvoltage Protection	The grid voltage is higher than the permissible range, or the high-voltage Duration exceeds the high voltage ride-through setting.	1. If it occurs occasionally, it may be a short-term grid abnormality. The inverter will resume normal operation after detecting that the grid is normal, and no manual intervention is required. 2. If it occurs frequently, check whether the grid voltage is within the permissible range. If not, contact the local power operator. If yes, the Grid Overvoltage Protection point also needs to be modified after obtaining the consent of the local power operator. 3. If it cannot be recovered for a long time, check whether the AC-side circuit breaker and output cables are connected properly.

Fault Code	Fault Name	Fault Cause	Fault Handling Recommendations
F03	Grid Undervoltage Protection	The grid voltage is lower than the permissible range, or the Duration of low voltage exceeds the Low Voltage ride-through setting.	1. If it occurs occasionally, it may be a short-term grid abnormality. The inverter will resume normal operation after detecting that the grid is normal, and no manual intervention is required. 2. If it occurs frequently, check whether the grid voltage is within the permissible range. If not, contact the local power operator. If yes, the Grid Undervoltage Protection point also needs to be modified after obtaining the consent of the local power operator. 3. If it cannot be recovered for a long time, check whether the AC-side circuit breaker and output cables are connected properly.

Fault Code	Fault Name	Fault Cause	Fault Handling Recommendations
F04	Grid Rapid Overvoltage Protection	A grid voltage detection abnormality or ultra-high voltage triggers the fault.	1. If it occurs occasionally, it may be a short-term grid abnormality. The inverter will resume normal operation after detecting that the grid is normal, and no manual intervention is required. 2. If it occurs frequently, check whether the grid voltage is within the permissible range. If not, contact the local power operator. If yes, the Grid Undervoltage Protection point also needs to be modified after obtaining the consent of the local power operator. 3. If it cannot be recovered for a long time, check whether the AC-side circuit breaker and output cables are connected properly.
F05	10minOvervoltage	Within10minthe moving average of the grid voltage exceeds the range specified by safety regulations.	Check whether the grid voltage has been operating at a relatively high voltage for a long time. If it occurs frequently, check whether the grid frequency is within the permissible range. If not, contact the local power operator. If yes, it is also necessary, after obtaining the consent of the local power operator, to modify the Grid10minOvervoltage protection point.

Fault Code	Fault Name	Fault Cause	Fault Handling Recommendations
F06	Grid Overfrequency	Grid abnormality: The actual grid frequency is higher than the local grid standard requirement.	1. If it occurs occasionally, it may be a short-term grid abnormality. The inverter will resume normal operation after detecting that the grid is normal, and no manual intervention is required. 2. If it occurs frequently, check whether the grid frequency is within the permissible range. If not, contact the local power operator. If yes, the Grid Overfrequency protection point also needs to be modified after obtaining the consent of the local power operator.
F07	Grid Underfrequency	Grid abnormality: The actual grid frequency is lower than the local grid standard requirement.	1. If it occurs occasionally, it may be a short-term grid abnormality. The inverter will resume normal operation after detecting that the grid is normal, and no manual intervention is required. 2. If it occurs frequently, check whether the grid frequency is within the allowable range. If not, contact the local power operator. If yes, the Grid Underfrequency protection point also needs to be modified after obtaining the consent of the local power operator.

Fault Code	Fault Name	Fault Cause	Fault Handling Recommendations
F08	Grid Frequency Instability	Grid abnormality: The actual rate of change of grid frequency does not comply with the local grid standard.	1. If it occurs occasionally, it may be a short-term grid abnormality. The inverter will resume normal operation after detecting that the grid is normal, and no manual intervention is required. 2. If it occurs frequently, check whether the grid frequency is within the allowable range. If not, contact the local power operator.
F09	Anti-islanding Protection	The grid has been disconnected. The grid voltage is maintained due to the presence of loads. Grid connection is stopped according to safety regulation Protection requirements.	1. If it occurs occasionally, it may be a short-term grid abnormality. The inverter will resume normal operation after detecting that the grid is normal, and no manual intervention is required. 2. If it occurs frequently, check whether the grid frequency is within the allowable range. If not, contact the local power operator.
F10	Voltage Ride-through Undervoltage Fault	Grid abnormality: The duration of Grid Voltage Abnormal exceeds the time specified for high/low voltage ride-through.	1. If it occurs occasionally, it may be a short-term grid abnormality. The inverter will resume normal operation after detecting that the grid is normal, and no manual intervention is required. 2. If it occurs frequently, check whether the grid voltage and frequency are within the allowable range and are stable. If not, contact the local power operator.

Fault Code	Fault Name	Fault Cause	Fault Handling Recommendations
F11	HVRT Overvoltage	Grid abnormality: The duration of Grid Voltage Abnormal exceeds the time specified for high/low voltage ride-through.	1. If it occurs occasionally, it may be a short-term grid abnormality. The inverter will resume normal operation after detecting that the grid is normal, and no manual intervention is required. 2. If it occurs frequently, check whether the grid voltage and frequency are within the allowable range and are stable. If not, contact the local power operator.
F12	30mAGfciProtection	The input-to-ground insulation resistance decreases during inverter operation.	1. If it occurs occasionally, it may be caused by an accidental abnormality of the external line. Normal operation will resume after the fault is cleared, and manual intervention is not required. 2. If it occurs frequently or cannot be recovered for a long time, check whether the PV string-to-ground impedance is too low.
F13	60mAGfciProtection	The input-to-ground insulation resistance decreases during inverter operation.	1. If it occurs occasionally, it may be caused by an accidental abnormality of the external line. Normal operation will resume after the fault is cleared, and manual intervention is not required. 2. If it occurs frequently or cannot be recovered for a long time, check whether the PV string-to-ground impedance is too low.

Fault Code	Fault Name	Fault Cause	Fault Handling Recommendations
F14	150mAGfciProtection	The input-to-ground insulation resistance decreases during inverter operation.	1. If it occurs occasionally, it may be caused by an accidental abnormality of the external line. Normal operation will resume after the fault is cleared, and manual intervention is not required. 2. If it occurs frequently or cannot be recovered for a long time, check whether the PV string-to-ground impedance is too low.
F15	GfciSlow Change Protection	The input-to-ground insulation resistance decreases during inverter operation.	1. If it occurs occasionally, it may be caused by an accidental abnormality of the external line. Normal operation will resume after the fault is cleared, and manual intervention is not required. 2. If it occurs frequently or cannot be recovered for a long time, check whether the PV string-to-ground impedance is too low.
F16	DCIProtection Level1	The High DC Component of the inverter output current exceeds the allowable range specified by safety regulations or the machine default.	1. If it is an abnormality introduced by an external fault, the inverter will automatically resume normal operation after the fault disappears, and manual intervention is not required. 2. If this alarm occurs frequently and affects the normal power generation of the plant, please contact the distributor or after-sales service center.

Fault Code	Fault Name	Fault Cause	Fault Handling Recommendations
F17	DCIProtection Level2	The High DC Component of the inverter output current exceeds the allowable range specified by safety regulations or the machine default.	1. If it is an abnormality introduced by an external fault, the inverter will automatically resume normal operation after the fault disappears, and manual intervention is not required. 2. If this alarm occurs frequently and affects the normal power generation of the plant, please contact the distributor or after-sales service center.

Fault Code	Fault Name	Fault Cause	Fault Handling Recommendations
F18	Low Insulation Resistance	1. The PV string is short-circuited to protective ground. 2. The PV string is installed in a long-term humid environment, and the line-to-ground insulation is poor. 3. The battery port line-to-ground has Low Insulation Resistance.	1. Check the impedance of the PV string/battery port to protective ground. If a short circuit occurs, identify the short-circuit point and rectify it. 2. Check whether the protective ground wire of the inverter is correctly connected. 3. If it is confirmed that the impedance is indeed lower than the default value in rainy weather, use Appto reset the inverter's“Insulation Impedance Protection Point”。 For inverters in the Australian and New Zealand markets，when an insulation impedance fault occurs, alarms can also be provided in the following ways: 1. The inverter is equipped with a buzzer; when a fault occurs, the buzzer sounds continuously for1minute; if the fault is not resolved, the buzzer sounds again every30minutes. 2. If the inverter is added to the monitoring platform, after the alarm notification method is set, alarm information can be sent to the customer by email.

Fault Code	Fault Name	Fault Cause	Fault Handling Recommendations
F19	Grounding Abnormal	1. The inverter's Protection ground (PE) wire is Not Connected. 2. When the output of the PV string is grounded, no isolation transformer is connected on the inverter output side.	1. Please confirm whether the inverter's Protection ground (PE) wire is Not Connected properly. 2. In the scenario where the output of the PV string is grounded, please confirm whether an isolation transformer is connected on the inverter output side.
F20	Hard Power Limit Protection	Abnormal Load Fluctuation	1. If it is an abnormality introduced by an external fault, the inverter will automatically resume normal operation after the fault disappears, and manual intervention is not required. 2. If this alarm occurs frequently and affects the normal power generation of the plant, please contact the distributor or after-sales service center.

Fault Code	Fault Name	Fault Cause	Fault Handling Recommendations
F21	Internal Comm Loss	SlaveDSP1communication timeout-MasterDSP, SlaveDSP2communication timeout-MasterDSP, SlaveDSP2communication timeout-SlaveDSP1, MasterDSPcommunication timeout-SlaveDSP1, MasterDSPcommunication timeout-SlaveDSP2or SlaveDSP1communication timeout-SlaveDSP2: 1. The chip is not powered on. 2. Chip program version error.	Disconnect the AC output side switch and DC input side switch,5 minutes later, close the AC output side switch and DC input side switch. If the fault persists, contact your dealer or after-sales service center.

Fault Code	Fault Name	Fault Cause	Fault Handling Recommendations
		MasterDSPcanmodule error, SlaveDSP1canmodule error or SlaveDSP2canmodule error: 1. Frame format error. 2. Parity check error. 3. can busoffline 4. HardwareCRCcheck error. 5. Control bit is receive (send) during transmission (reception). 6. Transmission to an unauthorized unit.	
F22	Generator waveform detection fault	1. This fault will be displayed continuously when the generator is Not Connected; 2. When the generator is operating, failure to meet the generator safety requirements will trigger this fault.	
F23	Generator Abnormal Connection		
F24	Generator Voltage Low		
F25	Generator Voltage High		
F26	Generator Frequency Low		

Fault Code	Fault Name	Fault Cause	Fault Handling Recommendations
F27	Generator Frequency High		1. If the generator is not connected, ignore this fault; 2. It is normal for this fault to occur when the generator is faulty; after the generator recovers, wait for a period of time and the fault will be cleared automatically; 3. This fault will not affect normal operation in off-grid mode. 4. When the generator and the grid are connected at the same time and meet the safety regulation requirements, the grid takes priority for grid connection, and the inverter will operate in grid-connected mode.
F28	ParallelI/OSelf-Check Abnormal	Parallel communication cable is not securely connected or the parallelIOchip is damaged	Check whether the parallel communication cable is securely connected, then check whether theIOchip is damaged; if so, replace theIOchip.
F29	Paralell Grid Line Reversed	The grid lines of some machines are reversed relative to the others	Reconnect the grid lines.
F30	AC HCT check Abnormal	AC HCT sampling abnormal	Disconnect the AC output side switch and DC input side switch,5 minutes later, close the AC output side switch and DC input side switch. If the fault persists, contact your dealer or after-sales service center.

Fault Code	Fault Name	Fault Cause	Fault Handling Recommendations
F31	GFCI HCT Check Abnormal	GFCI HCT sampling abnormal	Disconnect the AC output side switch and DC input side switch,5 minutes later, close the AC output side switch and DC input side switch. If the fault persists, contact your dealer or after-sales service center.
F32	Inverter Internal Failure	Inverter fault exists	Disconnect the AC output side switch and DC input side switch,5 minutes later, close the AC output side switch and DC input side switch. If the fault persists, contact your dealer or after-sales service center.
F33	FlashR/W Abnormal	Possible causes: flashcontent has changed;flashlifetime exhausted;	1. Upgrade to the latest firmware; 2. Contact the distributor or after-sales service center.
F34	AFCI Check Failure	During the Arc Failure self-check, the Arc Failure module did not detect an Arc Failure as expected	Disconnect the AC output side switch and DC input side switch,5 minutes later, close the AC output side switch and DC input side switch. If the fault persists, contact your dealer or after-sales service center.

Fault Code	Fault Name	Fault Cause	Fault Handling Recommendations
F35	Cabinet Overtemperature	Cabinet Overtemperature, possible causes: 1. The inverter installation location is not ventilated. 2. Ambient Overtemperature. 3. Internal fan operating abnormally.	1. Check whether the inverter installation location is well ventilated and whether the ambient temperature exceeds the maximum permitted ambient temperature range. 2. If ventilation is inadequate or Ambient Overtemperature occurs, improve ventilation and heat dissipation. 3. If both ventilation and ambient temperature are normal, contact your dealer or after-sales service center.

Fault Code	Fault Name	Fault Cause	Fault Handling Recommendations
F36	Bus Overvoltage	BUSovervoltage; possible causes: 1. PVvoltage too high; 2. InverterBUSvoltage sampling abnormal; 3. The isolation performance of the dual-split transformer at the rear end of the inverter is poor, causing mutual interference when two inverters are connected to the grid; one inverter reports DC overvoltage during grid connection;	Disconnect the AC output side switch and DC input side switch,5 minutes later, close the AC output side switch and DC input side switch. If the fault persists, contact your dealer or after-sales service center.

Fault Code	Fault Name	Fault Cause	Fault Handling Recommendations
F37	PVInput Overvoltage	PVinput voltage too high; possible causes: Incorrect PV array configuration: too many PV modules are connected in series in a string, resulting in the string open-circuit voltage being higher than the inverter's maximum operating voltage.	Check the series configuration of the corresponding PV array strings and ensure that the string open-circuit voltage does not exceed the inverter's maximum operating voltage. After the PV array is correctly configured, the inverter alarm will automatically clear.
F38	PVContinuous Hardware Overcurrent	1. Improper module configuration 2. Hardware damage	Disconnect the AC output side switch and DC input side switch,5minutes later, close the AC output side switch and DC input side switch. If the fault persists, contact your dealer or after-sales service center.
F39	PVContinuous Software Overcurrent	1. Improper module configuration 2. Hardware damage	Disconnect the AC output side switch and DC input side switch,5minutes later, close the AC output side switch and DC input side switch. If the fault persists, contact your dealer or after-sales service center.

Fault Code	Fault Name	Fault Cause	Fault Handling Recommendations
F40, F98	String reverse connection （String1-n) n: determined according to the inverter's actual Number of Strings	PVString reverse connection	Check whether the strings are reversely connected.

10.5.2.2.2 Troubleshooting (Fault Codes F41-F80)

Fault Code	Fault Name	Fault Cause	Fault Handling Recommendations
F41	Generator Port Overload	1. The off-grid side output exceeds the requirements specified in the datasheet. 2. Off-grid side short circuit. 3. Off-grid terminal voltage too low. 4. When used as a heavy-load port, the heavy load exceeds the requirements specified in the datasheet.	Use the data to verify the off-grid output voltage, current, power, and other data, and determine the cause of the problem.

Fault Code	Fault Name	Fault Cause	Fault Handling Recommendations
F42，F164,F165	DC Arcing Failure（String1-n) n: determined according to the inverter's actual Number of Strings	1. DC-side connection terminal is loose; 2. DC-side connection terminal has a poor contact; 3. DC cable conductor damage or loose connection	1. After the unit is reconnected to the grid, check whether the voltage and current of each channel abnormally drop to zero; 2. Check whether the DC-side terminals are securely connected.
F43	Grid Waveform Abnormal	Grid abnormality: abnormal grid voltage detection triggers the fault.	1. If it occurs occasionally, it may be a short-term grid abnormality. The inverter will resume normal operation after detecting that the grid is normal, and no manual intervention is required. 2. If it occurs frequently, check whether the grid voltage and frequency are within the allowable range and are stable. If not, contact the local power operator.
F44	Grid Phase Loss	Grid abnormality: a single-phase voltage dip occurs in the grid voltage.	1. If it occurs occasionally, it may be a short-term grid abnormality. The inverter will resume normal operation after detecting that the grid is normal, and no manual intervention is required. 2. If it occurs frequently, check whether the grid voltage and frequency are within the allowable range and are stable. If not, contact the local power operator.

Fault Code	Fault Name	Fault Cause	Fault Handling Recommendations
F45	Grid Voltage Imbalance	Excessive difference in grid phase voltages.	1. If it occurs occasionally, it may be a short-term grid abnormality. The inverter will resume normal operation after detecting that the grid is normal, and no manual intervention is required. 2. If it occurs frequently, check whether the grid voltage and frequency are within the allowable range and are stable. If not, contact the local power operator.
F46	Grid Phase Sequence Failure	Abnormal wiring between the inverter and the grid: wiring is not in positive phase sequence	1. Check whether the inverter-to-grid wiring is in positive phase sequence. After the wiring is correct (e.g., swap any two live wires), the fault disappears automatically. 2. If the wiring is correct and the fault persists, contact the distributor or after-sales service center.
F47	Grid Rapid Shutdown Protection	After detecting a Grid Power Outage condition, quickly shut down the output	The fault disappears automatically after grid power supply is restored.
F48	Grid Neutral Wire Loss (SplitGrid)	Split-phase Grid Neutral Wire Loss	1. The alarm automatically clears after grid power supply is restored. 2. Check whether the AC line or AC Switch is disconnected.
F49	L-PE Short Circuit	Output phase line toPEhas low impedance or short circuit	Check the impedance from the output phase line toPE, and identify the location with low impedance and repair it.
F50	DCVProtection Level1	Abnormal Load Fluctuation	

Fault Code	Fault Name	Fault Cause	Fault Handling Recommendations
F51	DCVProtection Level2	Abnormal Load Fluctuation	1. If it is an abnormality introduced by an external fault, the inverter will automatically resume normal operation after the fault disappears, and manual intervention is not required. 2. If this alarm occurs frequently and affects the normal power generation of the plant, please contact the distributor or after-sales service center.
F52	Leakage current (GFCI) multiple fault shutdowns	North American safety standards require that automatic recovery is not permitted after multiple faults; manual reset is required or wait24hbefore recovery	Check whether the PV string-to-ground impedance is too low.
F53	DC Arc Failure (AFCI) multiple fault shutdowns	North American safety standards require that automatic recovery is not permitted after multiple faults; manual reset is required or wait24hbefore recovery	1. After the unit is reconnected to the grid, check whether the voltage and current of each channel abnormally drop to zero; 2. Check whether the DC-side terminals are securely connected.

Fault Code	Fault Name	Fault Cause	Fault Handling Recommendations
F54	External communication link disconnection	Communication loss with external devices of the inverter; possible causes include external device power supply issues, mismatched Communication Protocols, or corresponding external devices not being configured.	The judgment is based on the actual model and the detection enable bit; peripherals not supported by some models will not be detected.
F55	Back-upOutput Overload	Prevent continuous Overload output of the inverter.	Disconnect some off-grid loads to reduce the inverter's off-grid output power.
F56	Back-upOutput Overvoltage	Prevent load damage caused by inverter output overvoltage.	1. If it occurs occasionally, it may be caused by load switching and does not require manual intervention. 2. If it occurs frequently, please contact your dealer or after-sales service center.
F57	ExternalBox Faults	During Switch On-Grid to Off-Grid, the wait time forBoxto switch relays is too long.	1. Check whether theBoxis working properly; 2. Check whether theBoxcommunication wiring is correct;
F58	CTLoss	CTconnection line disconnected (required by Japanese safety regulations)	Check whether theCTwiring is correct;

Fault Code	Fault Name	Fault Cause	Fault Handling Recommendations
F59	ParallelCAN Comm Abnormal	The parallel communication cable is not securely connected, or some units are not online.	Check whether all units are powered on and whether the parallel communication cables are securely connected.
F60	ParallelBack-upLine Reversed	Some units'backuplines are reversed relative to the others	Reconnect thebackupline.
F61	Inverter Soft Start Failure	Inverter Soft Start Failure during off-grid cold start	Check whether the inverter module of the unit is damaged.
F62	AC HCT Failure	HCTsensor is abnormal	Disconnect the AC output side switch and DC input side switch,5 minutes later, close the AC output side switch and DC input side switch. If the fault persists, contact your dealer or after-sales service center.
F63	GFCI HCT Failure	Leakage current sensor is abnormal.	Disconnect the AC output side switch and DC input side switch,5 minutes later, close the AC output side switch and DC input side switch. If the fault persists, contact your dealer or after-sales service center.
F64	Inverter Internal Failure	Inverter fault exists	Disconnect the AC output side switch and DC input side switch,5 minutes later, close the AC output side switch and DC input side switch. If the fault persists, contact your dealer or after-sales service center.

Fault Code	Fault Name	Fault Cause	Fault Handling Recommendations
F65	AC Terminal Overtemperature	AC Terminal Overtemperature, possible causes: 1. The inverter installation location is not ventilated. 2. Ambient Overtemperature. 3. Internal fan operating abnormally.	1. Check whether the inverter installation location is well ventilated and whether the ambient temperature exceeds the maximum permitted ambient temperature range. 2. If ventilation is inadequate or Ambient Overtemperature occurs, improve ventilation and heat dissipation. 3. If both ventilation and ambient temperature are normal, contact your dealer or after-sales service center.
F66	INVModule Overtemperature	Inverter module overtemperature, possible causes: 1. The inverter installation location is not ventilated. 2. Ambient Overtemperature. 3. Internal fan operating abnormally.	1. Check whether the inverter installation location is well ventilated and whether the ambient temperature exceeds the maximum permitted ambient temperature range. 2. If ventilation is inadequate or Ambient Overtemperature occurs, improve ventilation and heat dissipation. 3. If both ventilation and ambient temperature are normal, contact your dealer or after-sales service center.

Fault Code	Fault Name	Fault Cause	Fault Handling Recommendations
F67	BoostModule Overtemperature	BoostModule Overtemperature, possible causes: 1. The inverter installation location is not ventilated. 2. Ambient Overtemperature. 3. Internal fan operating abnormally.	1. Check whether the inverter installation location is well ventilated and whether the ambient temperature exceeds the maximum permitted ambient temperature range. 2. If ventilation is inadequate or Ambient Overtemperature occurs, improve ventilation and heat dissipation. 3. If both ventilation and ambient temperature are normal, contact your dealer or after-sales service center.
F68	AC Capacitor Overtemperature	Output filter capacitor overtemperature, possible causes: 1. The inverter installation location is not ventilated. 2. Ambient Overtemperature. 3. Internal fan operating abnormally.	1. Check whether the inverter installation location is well ventilated and whether the ambient temperature exceeds the maximum permitted ambient temperature range. 2. If ventilation is inadequate or Ambient Overtemperature occurs, improve ventilation and heat dissipation. 3. If both ventilation and ambient temperature are normal, contact your dealer or after-sales service center.
F69	PV IGBT Short Circuit Fault	Possible causes: 1. IGBTshort circuit 2. Inverter sampling circuit abnormal	Disconnect the AC output side switch and DC input side switch,5 minutes later, close the AC output side switch and DC input side switch. If the fault persists, contact your dealer or after-sales service center.

Fault Code	Fault Name	Fault Cause	Fault Handling Recommendations
F70	PV IGBTOpen Circuit	1. Software issue causing no PWM output: 2. Drive circuit abnormal: 3. IGBTopen circuit	
F71	NTCabnormal	NTCtemperature sensor abnormal	Disconnect the AC output side switch and DC input side switch,5 minutes later, close the AC output side switch and DC input side switch. If the fault persists, contact your dealer or after-sales service center.
F72	PWM Abnormal	PWMabnormal waveform	Disconnect the AC output side switch and DC input side switch,5 minutes later, close the AC output side switch and DC input side switch. If the fault persists, contact your dealer or after-sales service center.
F73	CPUInterrupt Abnormal	CPUinterrupt abnormal	Disconnect the AC output side switch and DC input side switch,5 minutes later, close the AC output side switch and DC input side switch. If the fault persists, contact your dealer or after-sales service center.
F74	Microelectronics fault	Function Safety abnormality detected	Disconnect the AC output side switch and DC input side switch,5 minutes later, close the AC output side switch and DC input side switch. If the fault persists, contact your dealer or after-sales service center.
F75	PV HCTFaults	boostcurrent sensor abnormal	Disconnect the AC output side switch and DC input side switch,5 minutes later, close the AC output side switch and DC input side switch. If the fault persists, contact your dealer or after-sales service center.

Fault Code	Fault Name	Fault Cause	Fault Handling Recommendations
F76	1.5VRef Abnormal	Reference circuit fault	Disconnect the AC output side switch and DC input side switch,5 minutes later, close the AC output side switch and DC input side switch. If the fault persists, contact your dealer or after-sales service center.
F77	0.3VRef Abnormal	Reference circuit fault	
F78	CPLDVersion Error	CPLDVersion Error	Disconnect the AC output side switch and DC input side switch,5 minutes later, close the AC output side switch and DC input side switch. If the fault persists, contact your dealer or after-sales service center.
F79	CPLDComm Failure	CPLDandDSPcommunication data error or timeout	Disconnect the AC output side switch and DC input side switch,5 minutes later, close the AC output side switch and DC input side switch. If the fault persists, contact your dealer or after-sales service center.
F80	Model identification fault	Model Recognition Error Fault	Disconnect the AC output side switch and DC input side switch,5 minutes later, close the AC output side switch and DC input side switch. If the fault persists, contact your dealer or after-sales service center.

10.5.2.2.3 Fault Handling (Fault Codes F81-F121)

Fault Code	Fault Name	Fault Cause	Fault Handling Recommendations
F81	P-Bus Overvoltage	BUSovervoltage; possible causes: 1. PVvoltage too high; 2. InverterBUSvoltage sampling abnormal; 3. The isolation performance of the dual-split transformer at the rear end of the inverter is poor, causing mutual interference when two inverters are connected to the grid; one inverter reports DC overvoltage during grid connection;	Disconnect the AC output side switch and DC input side switch,5 minutes later, close the AC output side switch and DC input side switch. If the fault persists, contact your dealer or after-sales service center.
F82	N-Bus Overvoltage		
F83	Bus Overvoltage (SecondaryCPU1)		

Fault Code	Fault Name	Fault Cause	Fault Handling Recommendations
F84	P-Bus Overvoltage (SecondaryCPU1)	BUSovervoltage; possible causes: 1. PVvoltage too high; 2. InverterBUSvoltage sampling abnormal; 3. The isolation performance of the dual-split transformer at the rear end of the inverter is poor, causing mutual interference when two inverters are connected to the grid; one inverter reports DC overvoltage during grid connection;	Disconnect the AC output side switch and DC input side switch,5 minutes later, close the AC output side switch and DC input side switch. If the fault persists, contact your dealer or after-sales service center.
F85	N-Bus Overvoltage (SecondaryCPU1)		
F86	Bus Overvoltage (SecondaryCPU2)		Disconnect the AC output side switch and DC input side switch,5 minutes later, close the AC output side switch and DC input side switch. If the fault persists, contact your dealer or after-sales service center.
F87	P-Bus Overvoltage (SecondaryCPU2)		

Fault Code	Fault Name	Fault Cause	Fault Handling Recommendations
F88	N-Bus Overvoltage (SecondaryCPU2)	BUSovervoltage; possible causes: 1. PVvoltage too high; 2. InverterBUSvoltage sampling abnormal; 3. The isolation performance of the dual-split transformer at the rear end of the inverter is poor, causing mutual interference when two inverters are connected to the grid; one inverter reports DC overvoltage during grid connection;	
F89	P-Bus Overvoltage(CPLD)		Disconnect the AC output side switch and DC input side switch,5 minutes later, close the AC output side switch and DC input side switch. If the fault persists, contact your dealer or after-sales service center.

Fault Code	Fault Name	Fault Cause	Fault Handling Recommendations
F90	N-Bus Overvoltage(CPLD)	BUSovervoltage; possible causes: 1. PVvoltage too high; 2. InverterBUSvoltage sampling abnormal; 3. The isolation performance of the dual-split transformer at the rear end of the inverter is poor, causing mutual interference when two inverters are connected to the grid; one inverter reports DC overvoltage during grid connection;	
F91	FlyCap Software Overvoltage	FlyCap Overvoltage, possible causes: 1. PVvoltage too high; 2. Inverter FlyCap voltage sampling abnormal;	Disconnect the AC output side switch and DC input side switch,5minutes later, close the AC output side switch and DC input side switch. If the fault persists, contact your dealer or after-sales service center.
F92	FlyCap Hardware Overvoltage		

Fault Code	Fault Name	Fault Cause	Fault Handling Recommendations
F93	FlyCap Undervoltage	FlyCap Undervoltage, possible causes: 1. PVenergy insufficient; 2. Inverter FlyCap voltage sampling abnormal;	Disconnect the AC output side switch and DC input side switch,5minutes later, close the AC output side switch and DC input side switch. If the fault persists, contact your dealer or after-sales service center.
F94	FlyCap Precharge Failure	FlyCap Precharge Failure, possible causes: 1. PVenergy insufficient; 2. Inverter FlyCap voltage sampling abnormal;	Disconnect the AC output side switch and DC input side switch,5minutes later, close the AC output side switch and DC input side switch. If the fault persists, contact your dealer or after-sales service center.
F95	FlyCap Precharge Abnormal	1. Control loop parameters unreasonable 2. Hardware damage	Disconnect the AC output side switch and DC input side switch,5minutes later, close the AC output side switch and DC input side switch. If the fault persists, contact your dealer or after-sales service center.

Fault Code	Fault Name	Fault Cause	Fault Handling Recommendations
F96, F97	String Overcurrent（String1-n) n: determined according to the inverter's actual Number of Strings	Possible causes: 1. String overcurrent; 2. String current sensor abnormal	Disconnect the AC output side switch and DC input side switch,5minutes later, close the AC output side switch and DC input side switch. If the fault persists, contact your dealer or after-sales service center.
F99, F100	String Missing（String1-n) n: determined according to the inverter's actual Number of Strings	String Fuse Open (If Applicable)	Check whether the fuse is open.
F101	Battery1Precharge Failure	Battery1Pre-charge circuit failure (pre-charge resistor burnt out, etc.)	Check whether the pre-charge circuit is functioning properly and whether the Battery Voltage matches the bus voltage after the battery is powered on alone. If they do not match, contact your dealer or after-sales service center.

Fault Code	Fault Name	Fault Cause	Fault Handling Recommendations
F102	Battery1Relay Failure	Battery1relay fails to operate normally	After the battery is powered on, check whether the battery relay operates and whether a closing sound is heard. If it does not operate, contact your dealer or after-sales service center.
F103	Battery1Overvoltage	Battery1input voltage exceeds the rated range of the equipment	Confirm whether the Battery Voltage is within the rated range of the equipment.
F104	Battery2Precharge Failure	Battery2Pre-charge circuit failure (pre-charge resistor burnt out, etc.)	Check whether the pre-charge circuit is functioning properly and whether the Battery Voltage matches the bus voltage after the battery is powered on alone. If they do not match, contact your dealer or after-sales service center.
F105	Battery2Relay Failure	Battery2relay fails to operate normally	After the battery is powered on, check whether the battery relay operates and whether a closing sound is heard. If it does not operate, contact your dealer or after-sales service center.
F106	Battery2Overvoltage	Battery2input voltage exceeds the rated range of the equipment	Confirm whether the Battery Voltage is within the rated range of the equipment.

Fault Code	Fault Name	Fault Cause	Fault Handling Recommendations
F107	On-grid PWM Sync Failure	An abnormality occurs during carrier synchronization and grid connection.	1. Check whether the synchronization cable is connected properly 2. Check whether the master-slave settings are normal; 3. Disconnect the AC output side switch and DC input side switch,5 minutes later, close the AC output side switch and DC input side switch. If the fault persists, contact your dealer or after-sales service center.
F108	DSPCommunication Failure	-	-
F109	ExternalSTSFaults	The cable connecting the inverter andSTSis abnormal.	Check whether the wiring harness connection sequence between the inverter andSTScorresponds one-to-one in order.
F110	Export Limit Protection	1. Inverter reports an error and disconnects from the grid 2. metercommunication is unstable 3. Reverse power flow condition occurs	1. Check whether the inverter has other error messages. If yes, handle them accordingly; 2. Check whether themeterconnection is reliable; 3. If this alarm occurs frequently and affects the normal power generation of the plant, please contact the distributor or after-sales service center.
F111	BypassOverload	-	-
F112	Black Start Failure	-	-

Fault Code	Fault Name	Fault Cause	Fault Handling Recommendations
F113	Offgrid AC Ins Volt High	-	-
F114	Relay Failure2	Relay abnormality, cause: 1. Relay abnormality (relay short circuit) 2. Relay sampling circuit abnormal. 3. AC side wiring abnormal (possible loose connection or short circuit)	Disconnect the AC output side switch and DC input side switch,5 minutes later, close the AC output side switch and DC input side switch. If the fault persists, contact your dealer or after-sales service center.
F115	SVGPrecharge Disabled	SVGPrecharge Hardware Failure	Contact the distributor or after-sales service center.
F116	SVG ModeSVG PIDPrevention Failure	PIDHardware Abnormal	
F117	DSPVersion Error	DSPSoftware Version Identification Error	Disconnect the AC output side switch and DC input side switch,5 minutes later, close the AC output side switch and DC input side switch. If the fault persists, contact your dealer or after-sales service center.

Fault Code	Fault Name	Fault Cause	Fault Handling Recommendations
F118	MOSContinuous Overvoltage	1. Software issue causes the inverter drive to be turned off before the flyback drive: 2. Inverter drive circuit abnormality prevents turn-on: 3. PVvoltage too high; 4. Mosvoltage sampling abnormal;	Disconnect the AC output side switch and DC input side switch,5 minutes later, close the AC output side switch and DC input side switch. If the fault persists, contact your dealer or after-sales service center.
F119	Bus short-circuit fault	Hardware damage	If aBUSshort-circuit fault occurs and the inverter remains disconnected from the grid, contact the dealer or after-sales service center.
F120	Bus sampling abnormal	1. BUSvoltage sampling hardware fault	Disconnect the AC output side switch and DC input side switch,5 minutes later, close the AC output side switch and DC input side switch. If the fault persists, contact your dealer or after-sales service center.
F121	DCSample Abnormal	1. BUSvoltage sampling hardware fault 2. Battery Voltage sampling hardware fault 3. DcrlyRelay Failure	Disconnect the AC output side switch and DC input side switch,5 minutes later, close the AC output side switch and DC input side switch. If the fault persists, contact your dealer or after-sales service center.

10.5.2.2.4 Troubleshooting (Fault Codes F122-F171)

Fault Code	Fault Name	Fault Cause	Fault Handling Recommendations
F122	PVInput Mode Error	PVAccess Mode has three modes; taking four-channelMPPTas an example: 1. Parallel mode: i.e.,AAAAmode（common-source mode），PV1-PV4share the same source;4PV strings, with allPVinputs connected to the same PV panel. 2. Partial parallel mode: i.e.,AACCmode;PV1andPV2are connected to the same source,PV3andPV4are connected to the same source. 3. Independent mode: i.e.,ABCDmode（non-common-source），PV1、PV2、PV3、PV4are independently connected;4PV strings, with allPVinput is connected to a	Check whether thePVAccess Mode is set correctly (ABCD、AACC、AAAA), and then set thePVAccess Mode 1. Confirm whether each actually connectedPVinput is connected correctly; 2. IfPVis connected correctly, check via theAPPor screen whether the currently set "PVAccess Mode" corresponds to the actual Access Mode; 3. If the currently set "PVAccess Mode" does not match the actual Access Mode, use theAPPor screen to set the "PVAccess Mode" to a mode consistent with the actual situation; after setting, disconnect thePVandACpower supply and restart; 4. After setting, if the current "PVAccess Mode" matches the actual Access Mode but this fault is still reported, please contact your dealer or after-sales service center.

Fault Code	Fault Name	Fault Cause	Fault Handling Recommendations
		separate PV panel. If the actualPVAccess Mode does not match thePVAccess Mode set on the device, this fault will be reported	
F123	Multi-channelPVphase error	PVinput mode setting error	Check whether thePVAccess Mode is set correctly (ABCD、AACC、AAAA), and then set thePVAccess Mode 1. Confirm whether each actually connectedPVinput is connected correctly; 2. IfPVis connected correctly, check via theAPPor screen whether the currently set "PVAccess Mode" corresponds to the actual Access Mode; 3. If the currently set "PVAccess Mode" does not match the actual Access Mode, use theAPPor screen to set the "PVAccess Mode" to a mode consistent with the actual situation; after setting, disconnect thePVandACpower supply and restart; 4. After setting, if the current "PVAccess Mode" matches the actual Access Mode but this fault is still reported, please contact your dealer or after-sales service center.

Fault Code	Fault Name	Fault Cause	Fault Handling Recommendations
F124	Battery1Reversed	Battery1positive and negative terminals reversed	Check whether the positive and negative poles of the battery and device wiring terminals match.
F125	Battery2Reversed	Battery2positive and negative terminals reversed	Check whether the positive and negative poles of the battery and device wiring terminals match.
F126	Abnormal battery connection	Abnormal battery connection	Check whether the battery is working normally.
F127	BAT Overtemperature	Battery overtemperature. Possible causes: 1. The inverter installation location is not ventilated. 2. Ambient Overtemperature. 3. Internal fan operating abnormally.	Disconnect the AC output side switch and DC input side switch,5 minutes later, close the AC output side switch and DC input side switch. If the fault persists, contact your dealer or after-sales service center.
F128	Ref Voltage Abnormal	Reference circuit fault	Disconnect the AC output side switch and DC input side switch,5 minutes later, close the AC output side switch and DC input side switch. If the fault persists, contact your dealer or after-sales service center.
F129	Cabinet Under Temperature	Cabinet Under Temperature. Possible cause: ambient temperature is too low.	Disconnect the AC output side switch and DC input side switch,5 minutes later, close the AC output side switch and DC input side switch. If the fault persists, contact your dealer or after-sales service center.

Fault Code	Fault Name	Fault Cause	Fault Handling Recommendations
F130	ACsideSPDFaults	AC-side surge protection device failed	Replace theAC-side surge protection device.
F131	DCsideSPDFaults	DC-side surge protection device failed	Replace theDC-side surge protection device.
F132	Internal Fan Abnormal	Internal Fan Abnormal, possible causes: 1. Fan power supply abnormal; 2. Mechanical fault（locked rotor）; 3. Fan aging damage.	Disconnect the AC output side switch and DC input side switch,5 minutes later, close the AC output side switch and DC input side switch. If the fault persists, contact your dealer or after-sales service center.
F133	External Fan Abnormal	External Fan Abnormal, possible causes: 1. Fan power supply abnormal; 2. Mechanical fault（locked rotor）; 3. Fan aging damage.	
F134	PIDAbnormal	PIDhardware fault orPVovervoltage causesPIDpause.	PVovervoltage-inducedPIDpause warning does not require action;PIDhardware fault can be cleared by switching off thePIDswitch and then switching it on; clear thePIDfault; replace thePIDdevice.

Fault Code	Fault Name	Fault Cause	Fault Handling Recommendations
F135	Trip-Switch Trip Warning	Possible causes: Overcurrent orPVreverse connection caused the trip switch to trip;	Contact the dealer or after-sales service center; the trip cause is occurrence ofPVshort circuit or reverse connection; check whether historicalPVshort-circuit warning or historicalPVreverse-connection warning exists; if so, maintenance personnel must check the correspondingPVcondition. After inspection confirms no fault, manually close the trip switch, and clear this warning through theAPPinterface by performing the Clear Historical Fault operation.
F136	HistoricalPV IGBT short-circuit warning	Possible causes: Overcurrent caused the trip switch to trip;	Contact the dealer or after-sales service center; maintenance personnel must, according to the historicalPVshort-circuit warning subcode, check whether theBoosthardware and external strings where the short circuit occurred have faults; after inspection confirms no fault, clear this warning through theAPPinterface by performing the Clear Historical Fault operation.

Fault Code	Fault Name	Fault Cause	Fault Handling Recommendations
F137, F138	HistoricalPVreverse-connection warning（String1-n)（n: determined according to the actual Number of Strings of the inverter)	Possible causes: Occurrence ofPVreverse connection caused the trip switch to trip;	Contact the dealer or after-sales service center; maintenance personnel must, according to the historicalPVreverse-connection warning subcode, check whether the corresponding string is reverse-connected, and check whether there is a voltage difference in thePVpanel configuration; after inspection confirms no fault, clear this warning through theAPPinterface by performing the Clear Historical Fault operation.
F139	FlashR/W Error	Possible causes: 1. Flashcontent has changed; 2. Flashlifetime exhausted;	1. Upgrade to the latest firmware; 2. Contact the distributor or after-sales service center.
F140	Meter Comm Loss	This warning may be reported only after the Power Limit function is enabled. Possible causes: 1. Meter not connected; 2. Incorrect wiring of the communication cable connecting the meter and the inverter.	Check the meter wiring and connect the meter correctly. If the fault persists after inspection, contact the dealer or after-sales service center.

Fault Code	Fault Name	Fault Cause	Fault Handling Recommendations
F141	PVType Identification Failure	PVpanel identification hardware abnormality	Contact the distributor or after-sales service center.
F142	PV String Mismatch	PVString Mismatch; under the sameMPPTthe open-circuit voltages of the two strings are configured differently	Check the open-circuit voltages of the two strings, and configure strings with the same open-circuit voltage under the sameMPPTinput; long-term PV String Mismatch poses a safety hazard.
F143	CTnot connected	CTnot connected	Check whether theCTwiring.
F144	CTReversed	CTReversed	Check whether theCTwiring.
F145	PE Loss	PE not connected	Check the PE conductor.
F146	PV String Terminal Overtemperature（String1~8)	37176registerPVterminal temperature alarm subcode1is set	-
F147	PV String Terminal Overtemperature（String9~16)	37177registerPVterminal temperature alarm subcode2is set	-
F148	PV String Terminal Overtemperature（String17~20)	37178registerPVterminal temperature alarm subcode3is set	-

Fault Code	Fault Name	Fault Cause	Fault Handling Recommendations
F149	HistoricalPVreverse-connection warning（String33~48)	Possible causes: Occurrence ofPVreverse connection caused the trip switch to trip;	Contact the dealer or after-sales service center; maintenance personnel must, according to the historicalPVreverse-connection warning subcode, check whether the corresponding string is reverse-connected, and check whether there is a voltage difference in thePVpanel configuration; after inspection confirms no fault, clear this warning through theAPPinterface by performing the Clear Historical Fault operation.
F150	Battery1Voltage Low	Battery Voltage is lower than the set value	-
F151	Battery2Voltage Low	Battery Voltage is lower than the set value	-
F152	Low Voltage of Battery Power	Battery is not in charging mode, and the voltage is lower than the shutdown voltage.	-
F153	Battery1Voltage High	-	-
F154	Battery2Voltage High	-	-

Fault Code	Fault Name	Fault Cause	Fault Handling Recommendations
F155	Online Low Insulation Resistance	1. The PV string is short-circuited to protective ground. 2. The PV string is installed in a long-term humid environment, and the line-to-ground insulation is poor.	1. Check the impedance of the PV strings to the Protection ground. If a short circuit occurs, rectify the short-circuit point. 2. Check whether the protective ground wire of the inverter is correctly connected. 3. If it is confirmed that this impedance is indeed lower than the default value in rainy weather, reset the 'Insulation Resistance Protection Point'.
F156	Micro-grid Overload Warning	backupinput current is too high	If it occurs occasionally, no action is required; if the alarm occurs frequently, contact your dealer or after-sales service center.
F157	Manual Reset	-	-
F158	Generator Phase Sequence Abnormal	-	-
F159	Multiplexed Port Configuration Abnormal	The multiplexed（Generator）port is configured as microgrid or large load, but a generator is actually connected	Before using aAPPto change the multiplexed（Generator）port configuration.

Fault Code	Fault Name	Fault Cause	Fault Handling Recommendations
F160	EMSForced Off-grid	EMSissues a forced off-grid command, but the off-grid function is not enabled	Enable the off-grid function.
F161	Passive Anti-islanding Protection	-	-
F162	Grid Type Fault	Actual Type of Electrical Supply System（two-phase or split-phase）does not match the configured safety standard	Switch to the corresponding safety standard according to the actual Type of Electrical Supply System.
F163	Grid Phase Instability	Grid abnormality: the rate of change of grid voltage phase does not comply with the local grid standard.	1. If it occurs occasionally, it may be a short-term grid abnormality. The inverter will resume normal operation after detecting that the grid is normal, and no manual intervention is required. 2. If it occurs frequently, check whether the grid frequency is within the allowable range. If not, contact the local power operator.

Fault Code	Fault Name	Fault Cause	Fault Handling Recommendations
F166	PV Terminal Overtemperature	PV Terminal Overtemperature, possible causes: 1. The inverter installation location is not ventilated. 2. Ambient Overtemperature. 3. Internal fan operating abnormally.	1. Check whether the inverter installation location is well ventilated and whether the ambient temperature exceeds the maximum permitted ambient temperature range. 2. If ventilation is inadequate or Ambient Overtemperature occurs, improve ventilation and heat dissipation. 3. If both ventilation and ambient temperature are normal, contact your dealer or after-sales service center.
F167	AC Terminal Overtemperature Warning	AC Terminal Overtemperature, possible causes: 1. The inverter installation location is not ventilated. 2. Ambient Overtemperature. 3. Internal fan operating abnormally.	
F168	Battery Terminal Overtemperature	Battery Terminal Overtemperature, possible causes: 1. The inverter installation location is not ventilated. 2. Ambient Overtemperature.	

Fault Code	Fault Name	Fault Cause	Fault Handling Recommendations
F169	Battery Terminal Overtemperature Warning	Battery Terminal Overtemperature, possible causes: 1. The inverter installation location is not ventilated. 2. Ambient Overtemperature.	
F170	STS Overtemperature	STS Overtemperature, possible causes: 1. The STS installation location is not ventilated. 2. Ambient Overtemperature.	
F171	Abnormal Wiring Between Inverter and Battery	Abnormal Power Line Connection Between Battery and Inverter	Check whether the power line connection between the battery and the inverter is normal.

10.5.2.2.5 Fault Symptom Handling

Fault Name	Fault Cause	Fault Handling Recommendations
Generator Failure	1. This fault will remain displayed when the generator is Not Connected. 2. When the generator is operating, failure to meet generator safety regulations will trigger this fault.	1. If the generator is not connected, ignore this fault; 2. It is normal for this fault to occur when the generator is faulty. After the generator recovers, wait for a period of time; the fault will be cleared automatically; 3. This fault does not affect normal operation in off-grid mode. 4. When the generator and grid are connected simultaneously and meet safety regulation requirements, the grid has priority for grid connection, and the system will operate in the grid-connected state.
BMS Status Bit Error	BMS Module Fault	Disconnect the AC output-side switch and DC input-side switch. After 5 minutes, close the AC output-side switch and DC input-side switch. If the fault persists, contact your dealer or after-sales service center.
Ambient Overtemperature	1. Poor ventilation of the equipment 2. Hot airflow recirculates to the ambient temperature sampling point	Disconnect the AC output-side switch and DC input-side switch. After 5 minutes, close the AC output-side switch and DC input-side switch. If the fault persists, contact your dealer or after-sales service center.

Fault Name	Fault Cause	Fault Handling Recommendations
PV Terminal Overtemperature	PV Terminal Overtemperature, possible causes: 1. The inverter installation location is not ventilated. 2. Ambient Overtemperature. 3. Internal fan malfunction.	1. Check whether ventilation at the inverter installation location is adequate and whether the ambient temperature exceeds the maximum permissible ambient temperature range. 2. If ventilation is inadequate or an Ambient Overtemperature condition exists, improve ventilation and heat dissipation. 3. If ventilation and ambient temperature are normal, contact your dealer or after-sales service center.
Battery Terminal Overtemperature	Battery Terminal Overtemperature, possible causes: 1. The inverter installation location is not ventilated. 2. Ambient Overtemperature.	1. Check whether ventilation at the inverter installation location is adequate and whether the ambient temperature exceeds the maximum permissible ambient temperature range. 2. If ventilation is inadequate or an Ambient Overtemperature condition exists, improve ventilation and heat dissipation. 3. If ventilation and ambient temperature are normal, contact your dealer or after-sales service center.
AC Terminal Overtemperature Warning	AC Terminal Overtemperature, possible causes: 1. The inverter installation location is not ventilated. 2. Ambient Overtemperature. 3. Internal fan malfunction.	

Fault Name	Fault Cause	Fault Handling Recommendations
Battery Terminal Overtemperature Warning	Battery Terminal Overtemperature, possible causes: 1. The inverter installation location is not ventilated. 2. Ambient Overtemperature.	1. Check whether ventilation at the inverter installation location is adequate and whether the ambient temperature exceeds the maximum permissible ambient temperature range. 2. If ventilation is inadequate or an Ambient Overtemperature condition exists, improve ventilation and heat dissipation. 3. If ventilation and ambient temperature are normal, contact your dealer or after-sales service center.
Three-phase on-grid fault	Three-phase external wiring error	Rewire.
External STS Failure	Abnormal cable connection between the inverter and STS	Check whether the wire harness connection sequence between the inverter and STS corresponds one-to-one in order.

Fault Name	Fault Cause	Fault Handling Recommendations
Parallel Comm Timeout Shutdown	In parallel operation, if the slave unit exceeds400seconds without communication to the master unit	Check whether the parallel communication harness is reliably connected and whether slave addresses are duplicated.
Three-phase off-grid phase loss fault	Three-phase system phase loss	1. Check whether all inverters are powered on; 2. Check whether an inverter is connected to each phase of the three-phase group;

Fault Name	Fault Cause	Fault Handling Recommendations
EPO	External triggering of the hardware EPO button or remote triggering of the EPO command	1. If Remote Shutdown is actively triggered, it can be ignored; 2. If there is no active triggering,contact your dealer or after-sales service center.
High combustible gas concentration	The combustible gas equipment will automatically trigger when it detects a concentration of 20% LEL or above.	1. After a fault occurs, the machine will automatically open the air damper to exhaust gas and reduce the concentration. When the concentration drops below 5% LEL and remains so for 15 minutes, the fault will be automatically cleared. 2. After a fault occurs, if a cluster-level Fire Fighting Failure is triggered, the air damper will be automatically closed. The damper status will be confirmed within 30 s to ensure that cluster-level fire fighting Protection is executed in an enclosed space. 3. Please contact your dealer or after-sales service center.
The air damper opening command for the combustible gas device is inconsistent with the feedback signal.	The control signal for opening the air damper is inconsistent with the feedback signal.	1. Check that the wiring harness signal connection is free of issues. 2. Please contact your dealer or after-sales service center.

Fault Name	Fault Cause	Fault Handling Recommendations
One-click shutdown stop	Check via the App whether the one-click shutdown function is enabled.	Disable one-click shutdown.
Offline shutdown	-	-
Remote shutdown	-	-
On-Grid SPD Fault	-	1. Try restarting the machine and observe whether the fault is cleared; 2. If the fault cannot be cleared after restart, please contact your dealer or after-sales service center.
Off-Grid SPD Fault	-	1. Try restarting the machine and observe whether the fault is cleared; 2. If the fault cannot be cleared after restart, please contact your dealer or after-sales service center.
Child Node Communication Failure	Internal Comm Abnormal	1. Try restarting the machine and observe whether the fault is cleared; 2. If the fault cannot be cleared after restart, please contact your dealer or after-sales service center.

Fault Name	Fault Cause	Fault Handling Recommendations
Dehumidifier Communication Failure	Abnormal communication link between the dehumidifier and the LC control box.	1. Check the communication link wiring harness and observe whether the fault is cleared; 2. Try restarting the machine and observe whether the fault is cleared; 3. If the fault cannot be cleared after restart, please contact your dealer or after-sales service center.
Combustible Gas Detection Device Communication Failure	1. The combustible gas device was not correctly configured with RS-485 address 2 at the factory. 2. Abnormal communication link between the combustible gas device and the LC control box.	1. Check the communication link wiring harness and observe whether the fault is cleared; 2. Try restarting the machine and observe whether the fault is cleared; 3. Use the method provided by the combustible gas manufacturer to check whether the address of the combustible gas device is 2; if not, modify it; 4. If the fault cannot be cleared after restart, please contact your dealer or after-sales service center.
DG Communication Failure	Abnormal communication link between the control board and the DG.	1. Check the link communication harness and observe whether the fault is eliminated; 2. Try restarting the machine and observe whether the fault is eliminated; 3. If the fault cannot be eliminated after restart, please contact your dealer or after-sales service center.
Battery Over Voltage	1. Individual cell voltage too high 2. Voltage sampling harness abnormality	

Fault Name	Fault Cause	Fault Handling Recommendations
	1. Battery total voltage too high 2. Voltage sampling harness abnormality	Record the fault phenomenon, restart the battery, wait a few minutes, and confirm whether the fault disappears. If the problem still exists after restart, please contact the after-sales service center.
Battery Undervoltage	1. Individual cell voltage too low 2. Voltage sampling harness abnormality	
	1. Battery total voltage too low 2. Voltage sampling harness abnormality	
Battery Overcurrent	1. Charging Current too high, battery current limiting abnormality: sudden changes in temperature and voltage values 2. Inverter response abnormality	
	Battery discharge current too high	
Battery Overtemperature	1. Ambient Overtemperature 2. Temperature sensor abnormality	

Fault Name	Fault Cause	Fault Handling Recommendations
Battery Undertemperature	1. Ambient temperature too low 2. Temperature sensor abnormality	
Battery Terminal Overtemperature	Terminal temperature too high	

Fault Name	Fault Cause	Fault Handling Recommendations
Battery Imbalance	1. If the temperature difference is too large, the battery will limit battery power at different stages, i.e., limit the charge and discharge current. Therefore, this problem is generally unlikely to occur. 2. Cell capacity degradation leads to excessive internal resistance; during an Overcurrent condition, the temperature rise is large, resulting in a large temperature difference. 3. Poor welding of cell tabs causes the cell temperature to rise too quickly under an Overcurrent condition. 4. Temperature sampling problem; 5. Power cable connection loose	

Fault Name	Fault Cause	Fault Handling Recommendations
	1. Inconsistent cell aging levels 2. Problems with the slave board chip can also cause excessive cell voltage difference; 3. Balancing problems on the slave board can also cause excessive cell voltage difference 4. Caused by harness problems	
Insulation Resistance	Insulation resistance damage	Check whether the ground wire is properly connected, restart the battery. If the problem still exists after restart, please contact the after-sales service center.
Pre-charging Failure Fault	Pre-charging Failure	Indicates that during pre-charging, the voltage across the pre-charge MOS always exceeds the specified threshold. After shutdown and restart, observe whether the fault persists, and check whether the wiring is correct and whether the pre-charge MOS is damaged.
Sampling harness fault	Poor contact or disconnection of the battery sampling harness	Check the wiring, restart the battery. If the problem still exists after restart, please contact the after-sales service center.
	Poor contact or disconnection of the individual cell voltage sampling harness	Check the wiring, restart the battery. If the problem still exists after restart, please contact the after-sales service center.

Fault Name	Fault Cause	Fault Handling Recommendations
	Poor contact or open circuit in the cell temperature sampling line	
	Excessive dual-channel current comparison error, or abnormal current sampling line circuit	
	Excessive dual-channel voltage comparison error or excessive voltage comparison error between MCU and AFE, or abnormal voltage sampling line circuit	
	Abnormal temperature sampling line circuit, poor contact, or open circuit	
	Level-5 overvoltage or Level-5 overtemperature; three-terminal fuse blown	Three-section fuse blown; contact the after-sales service center to replace the main control board.
Relay or MOS overtemperature	Relay or MOS overtemperature	This fault indicates that the MOS transistor temperature exceeds the specified threshold. Shut down and let it stand for 2 h until the temperature recovers.

Fault Name	Fault Cause	Fault Handling Recommendations
Shunt overtemperature	Shunt overtemperature	This fault indicates that the shunt temperature exceeds the specified threshold. Shut down and let it stand for 2 h until the temperature recovers.
BMS1 Other Fault 1 (residential energy storage type)	Relay or MOS open circuit	1. Upgrade the software, shut down and let it stand for 5 minutes, then restart and check whether the fault persists; 2. If it persists, replace the battery pack.
	Relay or MOS short circuit	1. Upgrade the software, shut down and let it stand for 5 minutes, then restart and check whether the fault persists; 2. If it persists, replace the battery pack.
	Abnormal communication between the master cluster and slave cluster, or cell inconsistency between clusters	1. Check the battery information and software version of the slave unit, and whether the communication cable connection to the master unit is normal; 2. Upgrade the software.
	Abnormal battery system loop harness, causing the interlock signal not to form a loop	Check whether the terminating resistor is installed correctly.
	Abnormal communication between BMS and PCS	1. Confirm whether the communication cable interface definition between the battery and inverter is correct; 2. Contact the after-sales service center to check the backend data and verify whether the inverter and battery software are correctly matched.

Fault Name	Fault Cause	Fault Handling Recommendations
	Abnormal communication harness between BMS master control and slave control	1. Check the wiring and restart the battery; 2. Upgrade the battery. If the problem persists after restart, contact the after-sales service center.
	Loss of communication between main negative chips	
	Air circuit breaker/shunt release abnormality	1. Shut down and let it stand for 5 minutes; after restart, check whether the fault persists; 2. Check the bottom blind-mate connectors of the PACK and PCU for loose or bent communication pins;
	MCU self-test failed	Upgrade the software and restart the battery. If the problem persists after restart, please contact the after-sales service center.
	1. Software version is too low or the BMS board is damaged 2. A large number of parallel-connected inverters causes excessive inrush current to the battery during pre-charging	1. Upgrade the software and observe whether the fault persists 2. In the case of parallel operation, black-start the battery first, then start the inverter(s)

Fault Name	Fault Cause	Fault Handling Recommendations
	MCU internal fault	Upgrade the software and restart the battery. This is generally caused by damage to the MCU or external components. If the problem persists after restart, please contact the after-sales service center.
	Total control current exceeds the specified threshold	1. Shut down and leave idle for 5 minutes; after restart, check whether the fault persists; 2. Check whether the inverter power setting is too high, causing the bus load to be exceeded;
	Cell inconsistency in parallel battery clusters	Verify whether the cells of the parallel battery clusters are consistent
	Reverse polarity connection of parallel battery clusters	Check whether the positive and negative poles of the parallel battery clusters are reverse-connected
	Severe overtemperature, overvoltage, or other conditions triggering the fire protection system	Contact the after-sales service center.
Air Conditioner Failure	Abnormal air conditioner failure	Try restarting the system. If the fault is not cleared, please contact the after-sales service center.
	Cabinet door not closed	Check whether the cabinet door is properly closed
	Supply voltage too high	

Fault Name	Fault Cause	Fault Handling Recommendations
	Supply voltage insufficient	Confirm whether the supply voltage meets the air conditioner input voltage requirements; after confirming compliance, power on again.
	No voltage input	
	Unstable supply voltage	
	Unstable compressor voltage	Try restarting the system. If the fault is not cleared, please contact the after-sales service center.
	Poor sensor contact or sensor damage	
	Air conditioner fan abnormal	
BMS1 Other Fault 2 (Residential ESS)	Internal voltage or current abnormality in DCDC	Refer to the specific DC Failure details.
	DCDC Overload or excessively high heatsink temperature, etc.	
	Abnormal cell sampling or inconsistent aging levels	Please contact the after-sales service center.
	Fan operation was not executed normally	Please contact the after-sales service center.

Fault Name	Fault Cause	Fault Handling Recommendations
	Loose screws or poor contact at the output port	1. Shut down the battery; check the wiring and the screws at the output port. 2. After confirmation, restart the battery and observe whether the fault persists. If it persists, please contact the after-sales service center.
	The battery has been in use for too long, or the cells are severely damaged	Please contact the after-sales service center to replace the pack.
	1. Software version is too low or the BMS board is damaged 2. A large number of parallel-connected inverters causes excessive inrush current to the battery during pre-charging	1. Upgrade the software and observe whether the fault persists. 2. In the case of parallel operation, perform a black start of the battery first, then start the inverter.
	Heating film is damaged	Please contact the after-sales service center.
	The three-terminal fuse of the heating film is blown, and the heating function cannot be used	Please contact the after-sales service center.
	Mismatch in software model, cell type, and hardware model	Check whether the software model, SN, cell type, and hardware model are consistent. If they are inconsistent, please contact the after-sales service center.

Fault Name	Fault Cause	Fault Handling Recommendations
	Communication disconnection of the thermal management board	1. Shut down and let it stand for 5 minutes; after restart, check whether the fault persists; 2. If the fault is not cleared, contact after-sales to replace the pack.
	Pack fan fault signal triggered	
DCDC Failure	Output port voltage too high	Check the output port voltage. If the output port voltage is normal and the fault cannot be cleared automatically after restarting the battery, please contact the after-sales service center.
	The DCDC module detects that the Battery Voltage exceeds the maximum charging voltage	Stop charging, discharge to below SOC 90% or leave it idle for 2 hours. If ineffective and the fault still exists after restart, please contact the after-sales service center.
	Heatsink temperature too high	Leave the battery idle for 1 hour until the heatsink temperature drops. If ineffective and the fault still exists after restart, please contact the after-sales service center.
	Battery discharge current too high	Check whether the load exceeds the battery's discharge capability. Turn off the load or stop the PCS for 60 s. If ineffective and the fault still exists after restart, please contact the after-sales service center.

Fault Name	Fault Cause	Fault Handling Recommendations
	The positive and negative poles of the output port power harness are connected in reverse to the parallel battery cluster or PCS	Turn off the battery manual switch, check whether the output port wiring is correct, and restart the battery.
	The output power relay cannot close	Check whether the output port wiring is correct and whether there is a short circuit. If ineffective and the fault still exists after restart, please contact the after-sales service center.
	Power device overtemperature	Let the battery stand for 1 h until the temperature of the internal power devices drops. If this is ineffective and the fault persists after restart, contact the after-sales service center.
	Relay adhesion	If the fault persists after restart, contact the after-sales service center.
Battery Rack Circulating Current Failure	1. Cell imbalance 2. No full-charge calibration at first power-on	Record the fault phenomenon, restart the battery, wait a few minutes, and confirm whether the fault disappears. If the problem still exists after restart, please contact the after-sales service center.
BMS1 Other Fault 3 (Large-scale Storage)	Abnormal communication with the Linux module	1. Check whether the communication cable connection is normal 2. Upgrade the software, restart the battery, and observe whether the fault persists. If it persists, contact the after-sales service center.

Fault Name	Fault Cause	Fault Handling Recommendations
	Excessive cell temperature rise rate	Cell abnormality; contact after-sales to replace the pack.
	SOC below 10%	Charge the battery.
	SN writing does not conform to the rules	Check whether the number of SN digits is correct. If abnormal, contact the after-sales service center.
	1. Abnormal daisy-chain communication within the battery cluster 2. Inconsistent cell aging among battery clusters	1. Check the contact condition of the battery packs in a single cluster 2. Confirm the usage of each battery cluster, such as cumulative charge/discharge capacity, cycle count, etc. 3. Contact the after-sales service center.
	Excessive humidity inside the pack	-
	Fuse open	Contact after-sales to replace the pack.
	Low battery SOC	Charge the battery.
BMS1 Other Fault 4 (Large-scale Storage)	Abnormal air circuit breaker	Contact after-sales to replace the pack.
	External device abnormality	Contact after-sales to replace the pack.
Contactor Failure 1	-	-
Contactor Failure 2	-	-

Fault Name	Fault Cause	Fault Handling Recommendations
Overload Protection (Ksic)	Continuous Overload (exceeding 690 kVA) for 10 s	Please contact the after-sales service center.
Overload Protection (Smart Port	Continuous Overload (exceeding 690 kVA) for 10 s	Please contact the after-sales service center.
Overcurrent Protection (Jinggui)	-	-
Overcurrent Protection (Smart Port)	-	-
Master AC On Meter Comm Error	1. The meter may not be connected to the master 2. The meter communication cable may be loose	1. Check whether the meter is connected to the master 2. Check whether the meter communication cable is loose
Parallel Slave Meter Error	Meter connected to slave	Set the machine connected to the meter as the master
Slave AC On Timeout with Master	1. Incorrect slave address setting 2. Slave communication cable loose	1. Check whether the slave addresses are duplicated 2. Check whether the parallel communication cable is loose

10.5.2.3 Battery Fault

- **Lynx C Series 60 Kwh Commercial and Industrial Battery System**

No.	Fault Name	Possible cause	Troubleshooting
1	Battery Over Voltage	Continuing to charge when the battery is fully charged	Stop charging. If it does not recover automatically, contact professional technical personnel to restart the system.
2	Battery Undervoltage	Continuing to discharge when the battery is fully discharged	Stop discharging. If it does not recover automatically, contact professional technical personnel to restart the system.
3	Battery Overcurrent	The current exceeds the system Max. Current during charging and discharging	Reduce the power. If it does not recover automatically, contact professional technical personnel to restart the system.
4	Battery Overtemperature	Temperature is too high during charging and discharging	Perform cooling treatment. If it does not recover automatically, contact professional technical personnel to restart the system.
5	Battery Undertemperature	Temperature is too low during charging and discharging	Perform heating treatment. If it does not recover automatically, contact professional technical personnel to restart the system.
6	Battery Terminal Overtemperature	Temperature is too high during charging and discharging	Perform cooling treatment. If it does not recover automatically, contact professional technical personnel to restart the system.
7	Battery Imbalance	Excessive temperature difference or voltage difference among individual cells	Stop charging and discharging and wait for the temperature difference to recover; perform balancing if the voltage difference is too large
8	Insulation Resistance	Low system insulation resistance	Check the grounding condition

No.	Fault Name	Possible cause	Troubleshooting
9	Pre-charging Failure Fault	Damage to pre-charge circuit components	Check the pre-charge circuit components
10	Sampling harness fault	Abnormal voltage, temperature, and current sampling harnesses	Check the corresponding harnesses
11	Relay open circuit	Relay Failure	Replace relay
12	Relay short circuit	Relay Failure	Replace relay
13	Parallel cluster fault	Slave cluster lost connection	Check reliability of master-slave harness connection
14	PCS Comm Loss	Abnormal communication harness with PCS	Check reliability of harness connection
15	BMU communication fault	Abnormal communication harness between BCU and BMU	Check reliability of harness connection
16	Air switch sticking fault	Molded case circuit breaker fault	Replace molded case circuit breaker
17	Fire protection system triggered	Internal thermal runaway in system	Please contact the after-sales service center.
18	Air Conditioner Failure	Abnormal fault in air conditioning system	Please contact the after-sales service center.

- **BAT-SSeries 15.3-56.3Kwh High-Voltage Battery**

No.	Fault Name	Possible cause	Troubleshooting
1	Charging Overvoltage2	• Cell voltage/total voltage too high • Voltage sampling wire abnormal	1. Shut down and leave idle for 5 minutes; after restart, check whether the fault persists; 2. If the fault is not cleared, please contact the after-sales service center.
2	Charging Overvoltage3	• Cell voltage/total voltage too high • Voltage sampling wire abnormal	1. Shut down and leave idle for 5 minutes; after restart, check whether the fault persists; 2. If the fault is not cleared, contact the after-sales service center.
3	Discharge Undervoltage3	• Cell voltage/total voltage too low • Voltage sampling wire abnormal	1. Shut down and leave idle for 5 minutes; after restart, check whether the fault persists; 2. Determine the inverter operating status and whether the battery is not charged due to operating mode and other issues; try charging the battery through the inverter and observe whether the fault clears. 3. If the fault is not cleared, contact the after-sales service center.

No.	Fault Name	Possible cause	Troubleshooting
4	Discharge Undervoltage2	• Cell voltage/total voltage too low • Voltage sampling wire abnormal	1. Shut down and leave idle for 5 minutes; after restart, check whether the fault persists; 2. Determine the inverter operating status and whether the battery is not charged due to operating mode and other issues; try charging the battery through the inverter and observe whether the fault clears. 3. If the fault is not cleared, contact the after-sales service center.
5	Cell Overvoltage2	• Cell voltage/total voltage too high • Voltage sampling wire abnormal	1. Shut down and leave idle for 5 minutes; after restart, check whether the fault persists; If the fault is not cleared, contact the after-sales service center.
6	Cell Undervoltage2	Cell Undervoltage	1. Shut down and leave idle for 5 minutes; after restart, check whether the fault persists; 2. Determine the inverter operating status and whether the battery is not charged due to operating mode and other issues; try charging the battery through the inverter and observe whether the fault clears. 3. If the fault is not cleared, contact the after-sales service center.

No.	Fault Name	Possible cause	Troubleshooting
7	Significant Cell Voltage Variation2	Significant Cell Voltage Variation	1. Restart the battery and wait 12 hours. 2. If the fault is not cleared, contact the after-sales service center.
8	Charging Overcurrent2	• Charging Current is too high; battery current limiting is abnormal: abrupt changes in temperature and voltage values • Abnormal inverter response	1. Shut down and leave idle for 5 minutes; after restart, check whether the fault persists; 2. Check whether the inverter power setting is too high, causing the current to exceed the battery's rated operating current; 3. If the fault is not cleared, contact the after-sales service center.
9	Discharging Overcurrent2	• Discharging current is too high; battery current limiting is abnormal: abrupt changes in temperature and SOC values • Abnormal inverter response	
10	Battery Cell High Temperature2	• Cell temperature too high • Abnormal temperature sensor	1. Power off and leave it idle for 30 minutes; after restart, check whether the fault persists; 2. If the fault is not cleared, contact the after-sales service center.

No.	Fault Name	Possible cause	Troubleshooting
11	Battery Cell Low Temperature2	• Ambient temperature too low • Abnormal temperature sensor	1. Power off and leave it idle for 30 minutes; after restart, check whether the fault persists; 2. If the fault is not cleared, contact the after-sales service center.
12	Charging Overtemperature2	• Cell temperature too high • Abnormal temperature sensor	1. Power off and leave it idle for 30 minutes; after restart, check whether the fault persists; 2. If the fault is not cleared, contact the after-sales service center.
13	Charging Low Temperature2	• Ambient temperature too low • Abnormal temperature sensor	1. Power off and leave it idle for 30 minutes; after restart, check whether the fault persists; 2. If the fault is not cleared, contact the after-sales service center.
14	Discharging Overtemperature2	• Cell temperature too high • Abnormal temperature sensor	1. Power off and leave it idle for 30 minutes; after restart, check whether the fault persists; 2. If the fault is not cleared, contact the after-sales service center.

No.	Fault Name	Possible cause	Troubleshooting
15	Discharging Low Temperature2	• Ambient temperature too low • Abnormal temperature sensor	1. Power off and leave it idle for 30 minutes; after restart, check whether the fault persists; 2. If the fault is not cleared, contact the after-sales service center.
16	Significant Cell Temperature Variation2	Significant Cell Temperature Variation	1. Power off and leave it idle for 30 minutes; after restart, check whether the fault persists; 2. If the fault is not cleared, contact the after-sales service center.
17	Precharge Disabled	Precharge MOS closing failure	1. Shut down and leave idle for 5 minutes; after restart, check whether the fault persists; 2. If the fault is not cleared, contact the after-sales service center.
18	Battery Tripping	Battery Trip	1. Leave it idle for 10 minutes, then reclose to recover; 2. If the fault is not cleared, contact the after-sales service center.
19	Battery and Inverter Comm Failure	Battery and Inverter Comm Failure	1. Verify that the communication cable wiring sequence and DC cables are correct and that continuity is normal. 2. Restart the inverter and battery. 3. If the fault is not cleared, contact the after-sales service center.

No.	Fault Name	Possible cause	Troubleshooting
20	Specific Failures	Battery Specific Failures	Please contact the after-sales service center.
21	Parallel cluster fault	Slave cluster lost connection Cluster paralleling failure	Check the reliability of the master-slave harness communication connection; Please contact the after-sales service center.
22	Application Software Failure	Software self-test failure	Please contact the after-sales service center.
23	Microelectronics fault	Electronic component failure	Please contact the after-sales service center.
24	Master control Overload	Exceeds the load-carrying capacity range of the power line	Stop charging; if it does not recover automatically, contact professional technicians to restart the system.
25	Abnormal SN	Batteries with the same SN exist	Please contact the after-sales service center.
26	Abnormal air circuit breaker	Molded case circuit breaker abnormally tripped	Replace the molded case circuit breaker.

- **BAT-CSeries 61.4-112.6Kwh Commercial and Industrial Battery System**

No.	Fault Name	Possible cause	Troubleshooting
1	Charging Overvoltage2	• Cell voltage/total voltage too high • Voltage sampling wire abnormal	1. Shut down and leave idle for 5 minutes; after restart, check whether the fault persists; 2. If the fault is not cleared, contact the after-sales service center.
2	Charging Overvoltage3	• Cell voltage/total voltage too high • Voltage sampling wire abnormal	1. Shut down and leave idle for 5 minutes; after restart, check whether the fault persists; 2. If the fault is not cleared, contact the after-sales service center.
3	Discharge Undervoltage3	• Cell voltage/total voltage too low • Voltage sampling wire abnormal	1. Shut down and leave idle for 5 minutes; after restart, check whether the fault persists; 2. Determine the inverter operating status and whether the battery is not charged due to operating mode and other issues; try charging the battery through the inverter and observe whether the fault clears. 3. If the fault is not cleared, contact the after-sales service center.

No.	Fault Name	Possible cause	Troubleshooting
4	Discharge Undervoltage2	• Cell voltage/total voltage too low • Voltage sampling wire abnormal	1. Shut down and leave idle for 5 minutes; after restart, check whether the fault persists; 2. Determine the inverter operating status and whether the battery is not charged due to operating mode and other issues; try charging the battery through the inverter and observe whether the fault clears. 3. If the fault is not cleared, contact the after-sales service center.
5	Cell Overvoltage2	• Cell voltage/total voltage too high • Voltage sampling wire abnormal	1. Shut down and leave idle for 5 minutes; after restart, check whether the fault persists; If the fault is not cleared, contact the after-sales service center.
6	Cell Undervoltage2	Cell Undervoltage	1. Shut down and leave idle for 5 minutes; after restart, check whether the fault persists; 2. Determine the inverter operating status and whether the battery is not charged due to operating mode and other issues; try charging the battery through the inverter and observe whether the fault clears. 3. If the fault is not cleared, contact the after-sales service center.

No.	Fault Name	Possible cause	Troubleshooting
7	Significant Cell Voltage Variation2	Significant Cell Voltage Variation	1. Restart the battery and wait 12 hours. 2. If the fault is not cleared, contact the after-sales service center.
8	Charging Overcurrent2	• Charging Current is too high; battery current limiting is abnormal: abrupt changes in temperature and voltage values • Abnormal inverter response	1. Shut down and leave idle for 5 minutes; after restart, check whether the fault persists; 2. Check whether the inverter power setting is too high, causing the current to exceed the battery's rated operating current; 3. If the fault is not cleared, contact the after-sales service center.
9	Discharging Overcurrent2	• Discharging current is too high; battery current limiting is abnormal: abrupt changes in temperature and SOC values • Abnormal inverter response	
10	Battery Cell High Temperature2	• Cell temperature too high • Abnormal temperature sensor	1. Power off and leave it idle for 30 minutes; after restart, check whether the fault persists; 2. If the fault is not cleared, contact the after-sales service center.

No.	Fault Name	Possible cause	Troubleshooting
11	Battery Cell Low Temperature2	• Ambient temperature too low • Abnormal temperature sensor	1. Power off and leave it idle for 30 minutes; after restart, check whether the fault persists; 2. If the fault is not cleared, contact the after-sales service center.
12	Charging Overtemperature2	• Cell temperature too high • Abnormal temperature sensor	1. Power off and leave it idle for 30 minutes; after restart, check whether the fault persists; 2. If the fault is not cleared, contact the after-sales service center.
13	Charging Low Temperature2	• Ambient temperature too low • Abnormal temperature sensor	1. Power off and leave it idle for 30 minutes; after restart, check whether the fault persists; 2. If the fault is not cleared, contact the after-sales service center.
14	Discharging Overtemperature2	• Cell temperature too high • Abnormal temperature sensor	1. Power off and leave it idle for 30 minutes; after restart, check whether the fault persists; 2. If the fault is not cleared, contact the after-sales service center.

No.	Fault Name	Possible cause	Troubleshooting
15	Discharging Low Temperature2	• Ambient temperature too low • Abnormal temperature sensor	1. Power off and leave it idle for 30 minutes; after restart, check whether the fault persists; 2. If the fault is not cleared, contact the after-sales service center.
16	Significant Cell Temperature Variation2	Significant Cell Temperature Variation	1. Power off and leave it idle for 30 minutes; after restart, check whether the fault persists; 2. If the fault is not cleared, contact the after-sales service center.
17	Precharge Disabled	Precharge MOS closing failure	1. Shut down and leave idle for 5 minutes; after restart, check whether the fault persists; 2. If the fault is not cleared, contact the after-sales service center.
18	Battery Tripping	Battery Trip	1. Leave it idle for 10 minutes, then reclose to recover; 2. If the fault is not cleared, contact the after-sales service center.
19	Battery and Inverter Comm Failure	Battery and Inverter Comm Failure	1. Verify that the communication cable wiring sequence and DC cables are correct and that continuity is normal. 2. Restart the inverter and battery. 3. If the fault is not cleared, contact the after-sales service center.

No.	Fault Name	Possible cause	Troubleshooting
20	Specific Failures	Battery Specific Failures	Please contact the after-sales service center.
21	Parallel cluster fault	Slave cluster lost connection Cluster paralleling failure	Check the reliability of the master-slave harness communication connection Please contact the after-sales service center.
22	Application Software Failure	Software self-test failure	Please contact the after-sales service center
23	Microelectronics fault	Electronic component failure	Please contact the after-sales service center
24	Master control Overload	Exceeds the load-carrying capacity range of the power line	Stop charging; if it does not recover automatically, contact professional technicians to restart the system.
25	Abnormal SN	Batteries with the same SN exist	Please contact the after-sales service center
26	Abnormal air circuit breaker	Molded case circuit breaker abnormally tripped	Replace molded case circuit breaker
27	Air switch sticking fault	Molded case circuit breaker failure or auxiliary circuit breaker failure	Replace the molded case circuit breaker or replace the auxiliary circuit breaker
28	Fire protection system triggered	Internal thermal runaway within the system or false triggering of the fire protection system	Please contact the after-sales service center

No.	Fault Name	Possible cause	Troubleshooting
29	Air conditioning failure	Abnormal fault in air conditioning system	Please contact the after-sales service center
30	Access control failure	Door abnormally opened or access control sensor damaged	Close the door or replace the access control sensor
31	EPO triggered	EPO pressed or EPO button damaged	Replace the EPO button
32	PACK fan failure	PACK fan stalled or not operating	Replace the corresponding PACK fan

10.5.3 Handling After Fault Clearing

In the energy storage system, for some faults, the system can resume normal operation only after the fault handling is completed.

10.5.3.1 Clear AFCI Failure Warning

[Software used]: SolarGo App
[Clearing method]:

1. Go to**[Home]** > **[Settings]** > **[Advanced Settings]** > **[DC Arc Detection]**。
2. Tap**[Clear AFCI Failure Alarm]**button.

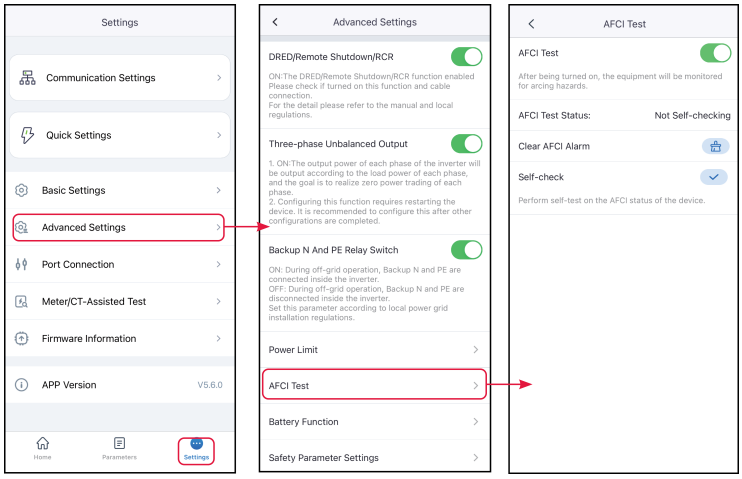
Settings
Communication Settings
Quick Settings
Basic Settings
Advanced Settings
Port Connection
Meter/CT-Assisted Test
Firmware Information
APP Version
V5.6.0
Home
Parameters
Settings
Advanced Settings
DRED/Remote Shutdown/RCR
ON:The DRED/Remote Shutdown/RCR function enabled Please check if turned on this function and cable connection.
For the detail please refer to the manual and local regulations.
Three-phase Unbalanced Output
1. ON:The output power of each phase of the inverter will be output according to the load power of each phase, and the goal is to realize zero power trading of each phase.
2. Configuring this function requires restarting the device. It is recommended to configure this after other configurations are completed.
Backup N And PE Relay Switch
ON: During off-grid operation, Backup N and PE are connected inside the inverter.
OFF: During off-grid operation, Backup N and PE are disconnected inside the inverter.
Set this parameter according to local power grid installation regulations.
Power Limit
AFCI Test
Battery Function
Safety Parameter Settings
AFCI Test
AFCI Test
After being turned on, the equipment will be monitored for arcing hazards.
AFCI Test Status:
Not Self-checking
Clear AFCI Alarm
Self-check
Perform self-test on the AFCI status of the device.

11 Technical Parameters

11.1 Inverter Parameters

Technical Data	GW15K-ET	GW20K-ET	GW25K-ET	GW29.9K-ET	GW30K-ET
Battery Input Data					
Battery Type	Li-Ion	Li-Ion	Li-Ion	Li-Ion	Li-Ion
Nominal Battery Voltage (V)	500	500	500	500	500
Battery voltage range (V)	200~800	200~800	200~800	200~800	200~800
Start-up Voltage (V)	200	200	200	200	200
Number of Battery Input	1	1	2	2	2
Max. Continuous Charging Current (A)	50	50	50×2	50×2	50×2
Max. Continuous Discharging Current (A)	50	50	50×2	50×2	50×2
Max Charge Power (W)	15000	20000	25000	30000	30000
Max Discharge Power (W)	15000	20000	25000	30000	30000
PV String Input Data					
Max. Input Power (W)*1	22500	30000	37500	45000	45000
Max. Input Voltage (V)*2	1000	1000	1000	1000	1000
MPPT Operating Voltage Range (V)	200~850	200~850	200~850	200~850	200~850
MPPT Voltage Range at Nominal Power (V)	400~850	400~850	450~850	450~850	450~850
Start-up Voltage (V)	200	200	200	200	200

Technical Data	GW15K-ET	GW20K-ET	GW25K-ET	GW29.9K-ET	GW30K-ET
Nominal Input Voltage (V)	620	620	620	620	620
Max. Input Current per MPPT (A)	30	30	30	30	30
Max. Short Circuit Current per MPPT (A)	38	38	38	38	38
Max. Backfeed Current to The Array (A)	0	0	0	0	0
Number of MPPT	2	2	3	3	3
Number of Strings per MPPT	2/2	2/2	2/2/2	2/2/2	2/2/2
AC Output Data (On-grid)					
Nominal Output Power (W)	15000	20000	25000	29900	30000
Max. Output Power (W)	15000	20000	25000	29900	30000
Nominal Output Power at 40 ℃(W) *14	15000	20000	25000	29900	30000
Max. Output Power at 40 ℃ (W)*14	15000	20000	25000	29900	30000
Nominal Apparent Power Output to Utility Grid (VA)	15000	20000	25000	29900	30000
Max. Apparent Power Output to Utility Grid (VA)*3 *15	16500	22000	27500	29900	33000
Nominal Apparent Power from Utility Grid(VA)	15000	20000	25000	30000	30000
Max. Apparent Power from Utility Grid (VA) *12	15000	20000	25000	30000	30000

Technical Data	GW15K-ET	GW20K-ET	GW25K-ET	GW29.9K-ET	GW30K-ET
Nominal Output Voltage (V)	380/400, 3L/N/PE	380/400, 3L/N/PE	380/400, 3L/N/PE	380/400, 3L/N/PE	380/400, 3L/N/PE
Output Voltage Range (V)*4	0~300	0~300	0~300	0~300	0~300
Nominal AC Grid Frequency (Hz)	50/60	50/60	50/60	50/60	50/60
AC Grid Frequency Range (Hz)	45~65	45~65	45~65	45~65	45~65
Max. AC Current Output to Utility Grid (A) *11	23.9	31.9	39.9	43.3	47.8
Max. AC Current From Utility Grid (A) *13	22.7	30.3	37.9	45.3	45.5
Nominal AC Current From Utility Grid (A)	21.7 @230V 22.7 @220V	29.0 @230V 30.3 @220V	36.2 @230V 37.9 @220V	43.3 @230V 45.3 @220V	43.5 @230V 45.5 @220V
Max. Output Fault Current (Peak and Duration) (A)	241.5A@126ms	241.5A@126ms	241.5A@126ms	241.5A@126ms	241.5A@126ms
Inrush Current (Peak and Duration) (A)	264A@53us	264A@53us	264A@53us	264A@53us	264A@53us
Nominal Output Current (A)*5	21.7	29	36.2	43.3	43.5

Technical Data	GW15K-ET	GW20K-ET	GW25K-ET	GW29.9K-ET	GW30K-ET
Power Factor	~1 (Adjustable from0.8 leading~0.8 lagging)	~1 (Adjustable from0.8 leading~0.8 lagging)	~1 (Adjustable from0.8 leading~0.8 lagging)	~1 (Adjustable from0.8 leading~0.8 lagging)	~1 (Adjustable from0.8 leading~0.8 lagging)
Max. Total Harmonic Distortion	≤3.05%	≤3.05%	≤3.05%	≤3.05%	≤3.05%
Maximum Output Overcurrent Protection (A)	94	94	94	94	94
AC Output Data (Back-up)					
Back-up Nominal Apparent Power (VA)	15000	20000	25000	29900	30000
Max. Output Apparent Power without Grid(VA)*6	15,000(18,000@60s , 24,000@3s)	20,000(24,000@60s , 32,000@3s)	25,000(30,000@60s)	30,000(36,000@60s)	30,000(36,000@60s)
Max. Output Apparent Power with Grid (VA)	15000	20000	25000	29900	30000
Nominal Output Current (A)	22.7	30.3	37.9	45.5	45.5
Max. Output Current (A)	22.7(27.3@60s, 36.4@3s)	30.3(36.4@60s, 48.5@3s)	37.9(45.5@60s)	45.5(54.5@60s)	45.5(54.5@60s)
Max. Output Fault Current (Peak and Duration) (A)	94	94	94	94	94

Technical Data	GW15K-ET	GW20K-ET	GW25K-ET	GW29.9K-ET	GW30K-ET
Inrush Current (Peak and Duration) (A)	264@53 us	264@53 us	264@53 us	264@53 us	264@53 us
Maximum Output Overcurrent Protection (A)	94	94	94	94	94
Nominal Output Voltage (V)	380/400	380/400	380/400	380/400	380/400
Nominal Output Frequency (Hz)	50/60	50/60	50/60	50/60	50/60
Output THDv (@Linear Load)	<3%	<3%	<3%	<3%	<3%
Efficiency					
Max. Efficiency	98.0%	98.0%	98.0%	98.0%	98.0%
European Efficiency	97.5%	97.5%	97.5%	97.5%	97.5%
Max. Battery to AC Efficiency	97.5%	97.5%	97.5%	97.5%	97.5%
MPPT Efficiency	99.9%	99.9%	99.9%	99.9%	99.9%
Protection					
PV String Current Monitoring	Integrated	Integrated	Integrated	Integrated	Integrated
PV Insulation Resistance Detection	Integrated	Integrated	Integrated	Integrated	Integrated
Residual Current Monitoring	Integrated	Integrated	Integrated	Integrated	Integrated
PV Reverse Polarity Protection	Integrated	Integrated	Integrated	Integrated	Integrated
Battery Reverse Polarity Protection	Integrated	Integrated	Integrated	Integrated	Integrated

Technical Data	GW15K-ET	GW20K-ET	GW25K-ET	GW29.9K-ET	GW30K-ET
Anti-islanding Protection	Integrated	Integrated	Integrated	Integrated	Integrated
AC Overcurrent Protection	Integrated	Integrated	Integrated	Integrated	Integrated
AC Short Circuit Protection	Integrated	Integrated	Integrated	Integrated	Integrated
AC Overvoltage Protection	Integrated	Integrated	Integrated	Integrated	Integrated
DC Switch*7	Integrated	Integrated	Integrated	Integrated	Integrated
DC Surge Protection	Type II	Type II	Type II	Type II	Type II
AC Surge Protection	Type III	Type III	Type III	Type III	Type III
AFCI*16	Optional	Optional	Optional	Optional	Optional
Rapid Shutdown	Optional	Optional	Optional	Optional	Optional
Remote Shutdown	Integrated	Integrated	Integrated	Integrated	Integrated
General Data					
Operating Temperature Range (℃)	-35~+60	-35~+60	-35~+60	-35~+60	-35~+60
Operating Environment	Outdoor	Outdoor	Outdoor	Outdoor	Outdoor
Relative Humidity	0 ~ 95%	0 ~ 95%	0 ~ 95%	0 ~ 95%	0 ~ 95%
Max. Operating Altitude (m)	4000	4000	4000	4000	4000
Cooling Method	Smart Fan Cooling	Smart Fan Cooling	Smart Fan Cooling	Smart Fan Cooling	Smart Fan Cooling

Technical Data	GW15K-ET	GW20K-ET	GW25K-ET	GW29.9K-ET	GW30K-ET
Display	LED, WLAN+APP	LED, WLAN+APP	LED, WLAN+APP	LED, WLAN+APP	LED, WLAN+APP
Communication with BMS	RS485 / CAN	RS485 / CAN	RS485 / CAN	RS485 / CAN	RS485 / CAN
Communication with Meter	RS485	RS485	RS485	RS485	RS485
Communication with Portal	WiFi+LAN+Bluetooth	WiFi+LAN+Bluetooth	WiFi+LAN+Bluetooth	WiFi+LAN+Bluetooth	WiFi+LAN+Bluetooth
Weight (kg)	48	48	54	54	54
Dimension W×H×D (mm)	520×660×220	520×660×220	520×660×220	520×660×220	520×660×220
Noise Emission (dB)	<45	<45	<45	<60	<60
Topology	Non-isolated	Non-isolated	Non-isolated	Non-isolated	Non-isolated
Self-consumption at Night (W) *8	<15	<15	<15	<15	<15
Ingress Protection Rating	IP66	IP66	IP66	IP66	IP66
DC Connector	Stäubli Electrical Connectors AG	Stäubli Electrical Connectors AG	Stäubli Electrical Connectors AG	Stäubli Electrical Connectors AG	Stäubli Electrical Connectors AG
AC Connector	OT	OT	OT	OT	OT
Environmental Category	4K4H	4K4H	4K4H	4K4H	4K4H
Pollution Degree	III	III	III	III	III
Overvoltage Category	DC II / AC III	DC II / AC III	DC II / AC III	DC II / AC III	DC II / AC III

Technical Data	GW15K-ET	GW20K-ET	GW25K-ET	GW29.9K-ET	GW30K-ET
Protective Class	I	I	I	I	I
Storage Temperature (℃)	-45~+85	-45~+85	-45~+85	-45~+85	-45~+85
The Decisive Voltage Class (DVC)	Battery：C PV：C AC：C Com：A	Battery：C PV：C AC：C Com：A	Battery：C PV：C AC：C Com：A	Battery：C PV：C AC：C Com：A	Battery：C PV：C AC：C Com：A
Mounting Method	Wall Mounted	Wall Mounted	Wall Mounted	Wall Mounted	Wall Mounted
Active Anti-islanding Method	AFDPF + AQDPF *9	AFDPF + AQDPF *9	AFDPF + AQDPF *9	AFDPF + AQDPF *9	AFDPF + AQDPF *9
Type of Electrical Supply System	Three phase Grid	Three phase Grid	Three phase Grid	Three phase Grid	Three phase Grid
Country of Manufacture	China	China	China	China	China

*1: In Australia, for most of the PV module, the max.Input power can achieve 2*Pn, Such as the max.input power of GW15K-ET can achieve 30000W. Besides, Max. Input Power, not continuous for 1.5*normal power.
*2: For 1000V system, Maximum operating voltage is 950V.
*3: According to the local grid regulation.
*4: Output Voltage Range: phase voltage.
*5: For 380V grid, the Nominal Output Current is 22.7A for GW15K-ET, 30.3A for GW20K-ET, 37.9A for GW25K-ET, 45.3A GW29.9K-ET, and 45.5A for GW30K-ET.
*6: Can be reached only if PV and battery power is enough.
*7: DC Switch: GHX6-55P (for Australia).
*8: No Back-up Output.
*9: AFDPF: Active Frequency Drift with Positive Feedback, AQDPF: Active Q Drift with Positive Feedback.
*10: Not all certifications & standards listed, check the official website for details.

*11: For 380V grid, the Max. AC Current Output to Utility Grid is 25A for GW15K-ET, 33.3A for GW20K-ET, 41.7A for GW25K-ET, 49.8A for GW29.9K-ET, 50A for GW30K-ET.
*12: When the load is connected to the inverter's backup port, the Max. Apparent Power from Utility Grid can reach to 22.5K for GW15K-ET, 30K for GW20k-ET, 33K for GW25K-ET, 33K for GW29.9K-ET,and 33K for GW30K-ET respectively.
*13: When the load is connected to the inverter's backup port, the Max. AC Current From Utility Grid can reach to 34A for GW15K-ET, 45A for GW20k-ET, 50A for GW25K-ET, 50A for GW29.9K-ET,and 50A for GW30K-ET respectively.
*14: Nominal Output Power at 40 ℃(W) and Max. Output Power at 40 ℃ (W) are only for Brazil.
*15: For Austria, Max. Output Power (W) is 15K for GW15K-ET, 20K for GW20K-ET, 25K for GW25K-ET, 29.9K GW29.9K-ET, and 30K for GW30K-ET.
*16: For Brazil, AFCI is integrated.

Technical Data	GW12KL-ET	GW18KL-ET	GW20K-ET	GW30K-ET
Battery Input Data				
Battery Type	Li-Ion	Li-Ion	Li-Ion	Li-Ion
Nominal Battery Voltage (V)	500	500	500	500
Battery Voltage Range (V)	112~650	112~650	200~800	200~800
Start-up Voltage (V)	112	112	180	180
Number of Battery Input	1	2	1	2
Max. Continuous Charging Current (A)	50	50*2	50	50*2
Max. Continuous Discharging Current (A)	50	50*2	50	50*2
Max Charge Power (kW)	12	18	20	30
Max Discharge Power (kW)	12	18	20	30
PV String Input Data				
Max. Input Power (kW)	24	36	30	45

Technical Data	GW12KL-ET	GW18KL-ET	GW20K-ET	GW30K-ET
Max. Input Voltage (V)*1	800	800	1000	1000
MPPT Operating Voltage Range (V)	200~650	200~650	200~850	200~850
MPPT Voltage Range at Nominal Power (V)	260~650	260~650	400~850	450~850
Start-up Voltage (V)	200	200	200	200
Nominal Input Voltage (V)	380	380	620	620
Max. Input Current per MPPT (A)	30	30	30	30
Max. Short Circuit Current per MPPT (A)	38	38	38	38
Max. Backfeed Current to The Array (A)	0	0	0	0
Number of MPPT Trackers	2	3	2	3
Number of Strings per MPPT	2/2	2/2/2	2/2	2/2/2
AC Output Data (On-grid)				
Nominal Output Power (kW)	12	18	20	30
Max. Output Power (kW)	12	18	20	30
Nominal Output Power at 40 ℃(kW) *8	12	18	20	30
Max. Output Power at 40 ℃ (kW)*8	12	18	20	30
Nominal Apparent Power Output to Utility Grid (kVA)	12	18	20	30

Technical Data	GW12KL-ET	GW18KL-ET	GW20K-ET	GW30K-ET
Max. Apparent Power Output to Utility Grid (kVA)	13.2	19.8	22	33
Nominal Apparent Power from Utility Grid(kVA)	12	18	20	30
Max. Apparent Power from Utility Grid (kVA) *6	12	18	20	30
Nominal Output Voltage (V)	220, 3L/N/PE	220, 3L/N/PE	380, 3L/N/PE	380, 3L/N/PE
Output Voltage Range (V)*2	0~165	0~165	0~300	0~300
Nominal AC Grid Frequency (Hz)	60	60	60	60
AC Grid Frequency Range (Hz)	55~65	55~65	45~65	45~65
Max. AC Current Output to Utility Grid (A)	34.6	52	33.3	50
Max. AC Current From Utility Grid (A) *7	31.5	47	30.3	45.5
Nominal AC Current From Utility Grid (A)	31.5	47	30.3	45.5
Max. Output Fault Current (Peak and Duration) (A)	241.5A@126 ms	241.5A@126 ms	241.5A@126 ms	241.5A@126 ms
Inrush Current (Peak and Duration) (A)	264A@53us	264A@53us	264A@53us	264A@53us
Nominal Output Current (A)	31.5	47	30.3	45.5

Technical Data	GW12KL-ET	GW18KL-ET	GW20K-ET	GW30K-ET
Power Factor	~1 (Adjustable from0.8 leading~0.8 lagging)	~1 (Adjustable from0.8 leading~0.8 lagging)	~1 (Adjustable from0.8 leading~0.8 lagging)	~1 (Adjustable from0.8 leading~0.8 lagging)
Max. Total Harmonic Distortion	<3%	<3%	<3%	<3%
Maximum Output Overcurrent Protection (A)	94	94	94	94
AC Output Data (Back-up)				
Back-up Nominal Apparent Power (kVA)	12	18	20	30
Max. Output Apparent Power without Grid(kVA)*3	12.0(14.4@60s , 19.2@3s)	18.0(21.6@60s)	20.0(24.0@60s , 32.0@3s)	30.0(36.0@60s)
Max. Output Apparent Power with Grid (kVA)	12	18	20	30
Nominal Output Current (A)	31.5	47	30.3	45.5
Max. Output Current (A)	31.5(37.8@60s, 50.4@3s)	47(56.4@60s)	30.3(36.4@60s, 48.5@3s)	45.5(54.5@60s)
Max. Output Fault Current (Peak and Duration) (A)	94	94	94	94
Inrush Current (Peak and Duration) (A)	264@53us	264@53us	264@53us	264@53us
Maximum Output Overcurrent Protection (A)	94	94	94	94

Technical Data	GW12KL-ET	GW18KL-ET	GW20K-ET	GW30K-ET
Nominal Output Voltage (V)	220, 3L/N/PE	220, 3L/N/PE	380, 3L/N/PE	380, 3L/N/PE
Nominal Output Frequency (Hz)	60	60	60	60
Output THDv (@Linear Load)	<3%	<3%	<3%	<3%
Switching from Grid Connected Mode to Standalone Mode	<10ms	<10ms	<10ms	<10ms
Switching from standalone mode to Grid connected mode	<10ms	<10ms	<10ms	<10ms
Efficiency				
Max. Efficiency	98.0%	98.0%	98.0%	98.0%
European Efficiency	97.5%	97.5%	97.5%	97.5%
Max. Battery to AC Efficiency	97.5%	97.5%	97.5%	97.5%
Protection				
PV String Current Monitoring	Integrated	Integrated	Integrated	Integrated
PV Insulation Resistance Detection	Integrated	Integrated	Integrated	Integrated
Residual Current Monitoring	Integrated	Integrated	Integrated	Integrated
PV Reverse Polarity Protection	Integrated	Integrated	Integrated	Integrated
Battery Reverse Polarity Protection	Integrated	Integrated	Integrated	Integrated

Technical Data	GW12KL-ET	GW18KL-ET	GW20K-ET	GW30K-ET
Anti-islanding Protection	Integrated	Integrated	Integrated	Integrated
AC Overcurrent Protection	Integrated	Integrated	Integrated	Integrated
AC Short Circuit Protection	Integrated	Integrated	Integrated	Integrated
AC Overvoltage Protection	Integrated	Integrated	Integrated	Integrated
DC Switch	Integrated	Integrated	Integrated	Integrated
DC Surge Protection	Type II	Type II	Type II	Type II
AC Surge Protection	Type III	Type III	Type III	Type III
AFCI	Integrated	Integrated	Integrated	Integrated
Rapid Shutdown	Optional	Optional	Optional	Optional
Remote Shutdown	Integrated	Integrated	Integrated	Integrated
General Data				
Operating Temperature Range (℃)	-35~+60	-35~+60	-35~+60	-35~+60
Storage Temperature (℃)	-45~+85	-45~+85	-45~+85	-45~+85
Relative Humidity	0 ~ 95%	0 ~ 95%	0 ~ 95%	0 ~ 95%
Max. Operating Altitude (m)	4000	4000	4000	4000
Cooling Method	Smart Fan Cooling	Smart Fan Cooling	Smart Fan Cooling	Smart Fan Cooling
User Interface	LED, WLAN+APP	LED, WLAN+APP	LED, WLAN+APP	LED, WLAN+APP
Communication with BMS	RS485 / CAN	RS485 / CAN	RS485 / CAN	RS485 / CAN

Technical Data	GW12KL-ET	GW18KL-ET	GW20K-ET	GW30K-ET
Communication	RS485, WiFi+LAN+Bluetooth, 4G+Bluetooth(Optional)	RS485, WiFi+LAN+Bluetooth, 4G+Bluetooth(Optional)	RS485, WiFi+LAN+Bluetooth, 4G+Bluetooth(Optional)	RS485, WiFi+LAN+Bluetooth, 4G+Bluetooth(Optional)
Communication Protocols	Modbus-RTU (SunSpec Compliant), Modbus-TCP	Modbus-RTU (SunSpec Compliant), Modbus-TCP	Modbus-RTU (SunSpec Compliant), Modbus-TCP	Modbus-RTU (SunSpec Compliant), Modbus-TCP
Weight (kg)	48	54	48	54
Dimension W×H×D (mm)	520×660×220	520×660×220	520×660×220	520×660×220
Noise Emission (dB)	<45	<60	<45	<60
Topology	Non-isolated	Non-isolated	Non-isolated	Non-isolated
Self-consumption at Night (W) *4	<15	<15	<15	<15
Ingress Protection Rating	IP66	IP66	IP66	IP66
Anti-corrosion Class	C4	C4	C4	C4
DC Connector	MC4	MC4	MC4	MC4
AC Connector	OT	OT	OT	OT
Environmental Category	4K4H	4K4H	4K4H	4K4H
Pollution Degree	III	III	III	III
Overvoltage Category	DC II / AC III	DC II / AC III	DC II / AC III	DC II / AC III
Protective Class	I	I	I	I

Technical Data	GW12KL-ET	GW18KL-ET	GW20K-ET	GW30K-ET
The Decisive Voltage Class (DVC)	Battery：C PV：C AC：C Com：A	Battery：C PV：C AC：C Com：A	Battery：C PV：C AC：C Com：A	Battery：C PV：C AC：C Com：A
Mounting Method	Wall Mounted	Wall Mounted	Wall Mounted	Wall Mounted
Active Anti-islanding Method	FDPF + AQDPF *5	FDPF + AQDPF *5	AFDPF + AQDPF *5	AFDPF + AQDPF *5
Type of Electrical Supply System	Three phase Grid	Three phase Grid	Three phase Grid	Three phase Grid
Country of Manufacture	China	China	China	China

*1: For 1000V system，Maximum operating voltage is 950V.
*2: Output Voltage Range: phase voltage.
*3: Can be reached only if PV and battery power is enough.
*4: No Back-up Output.
*5: AFDPF: Active Frequency Drift with Positive Feedback, AQDPF: Active Q Drift with Positive Feedback.
*6: When the load is connected to the inverter’s backup port, the Max. Apparent Power from Utility Grid can reach to 18kVA for GW12KL-ET, 19.8kVA for GW18KL-ET, 30kVA for GW20k-ET and 33kVA for GW30K-ET respectively.
*7: When the load is connected to the inverter’s backup port, the Max. AC Current From Utility Grid can reach 47.2 A for GW12KL-ET and 52A for GW18KL-ET; And can reach 45A for GW20k-ET and 50A for GW30K-ET respectively.
*8: Nominal Output Power at 40 ℃(W) and Max. Output Power at 40 ℃ (W) are only for Brazil.

11.2 Battery Parameters

11.2.1 Lynx C Series 60kWh C&I Battery System

Technical Parameters	GW60KWH-D-10	GW60KWH-D-10(EXTENSION)
Battery Data		
Usable Energy (kWh)*1	60	
Cell Type	LFP (LiFePO4)	
Cell Capacity (Ah)	100	
Pack Nominal Energy (kWh)	5.76	
Number of Packs	11	
Nominal Voltage (V)	633.6	
Operating Voltage Range (V)	554.4~712.8	
Max. Charge/ Discharge Current (A)*2	96	
Max. Charge/ Discharge Rate*2	0.96C	
Cycle Life*3	≥5000	
Depth of Discharge	100%	
Efficiency		
Round-trip Efficiency	95%	
General Data		
Operating Temperature Range (℃)	Charge: 0~+55; Discharge: -25~+55	
Storage Temperature (℃)	0~+35(< One Year)； -20~0(≤One Month)； +35~+40(≤One Month)	
Relative Humidity	0~95%	
Max. Operating Altitude (m)	3000	
Heating & Cooling	Air Conditioner	
User Interface	LED indicator	
Communication Interface	CAN	
Communication Protocol	CAN	
Weight (kg)	appro.1029.5	appro.972
Dimension (W×H×D mm)	1108×2050× 1111.5	808×2050× 1111.5
Ingress Protection Rating	IP55(Battery Cabinet)	
Anti-Corrosion*4	C4 (Optional upgrade to C5)	
Fire Suppression	Perfluoro	
Certification*5		

Technical Parameters	GW60KWH-D-10	GW60KWH-D-10(EXTENSION)
Safety Regulation	IEC62619/63056, IEC60730-1, IEC/EN62477-1, IEC62040-1	
EMC	EN IEC61000-6-1, EN IEC61000-6-2, EN IEC61000-6-3, EN IEC61000-6-4	
*1: Test conditions, 100% DOD, 0.5C charge & discharge at +25±2 °C for battery system at beginning life. System Usable Energy may vary with different Inverter. *2: Actual Dis-/Charge Current and power derating will occur related to Cell Temperature and SOC.And, Max C-rate continuous time is affected by SOC, Cell Temperature, Atmosphere environment temperature ,Air-conditioner refrigeration capacity. *3: Based on Cell test condition of 25±2℃, 0.5C/0.5C and 80% EOL. *4: Excluding locks. *5: Not all certifications & standards listed, check the official website for detail.		

11.2.2 BAT-S Series 15.3-56.3kWh High Voltage Battery

Technical Data	GW15.3-BAT-I-G11	GW20.4-BAT-I-G11
Battery System		
Cell Type	LFP ($LiFePO_4$)	
Capacity (Ah)	100	
Pack Type/model	GW5.1-PACK-I-G10	
Pack Nominal Energy (kWh)	5.12	
Pack Configuration	1P48S	1P64S
Pack Weight （kg）	42.5	
Number of Packs	3	4
Nominal Energy (kWh)	15.3	20.4
Usable Energy (kWh) *1	15	20

Technical Data	GW15.3-BAT-I-G11	GW20.4-BAT-I-G11
Nominal Voltage (V)	153.6	204.8
Operating Voltage Range (V)	137.76~173.28	183.68~231.04
Charging Operating Temperature Range（℃）	0~+55	
Discharging Operating Temperature Range（℃）	-20~+55	
Max. Charge/ Disharge Current (A) *2	100/110	
Max. Charge/ Discharge Rate *2	1C/1.1C	
Max. Charge/ Discharge power (kW) *2	15.3/16.8	20.4/22.4
Cycle Life	6000 (25±2°C, 0.5C, 90%DOD, 70%EOL)	
Depth of Discharge	100%	
Efficiency		
Round-trip Efficiency	96%@100%DOD, 0.2C, 25±2℃	
General Data		
Operating Temperature Range (℃)	0~40℃	
Storage Temperature (℃)	+35~+45 (< 6 Months); -20~+35 (< 1 Year)	
Relative Humidity	5 ~ 85%, No condensation	
Max. Operating Altitude (m)	3000	
Cooling Method	Natural Cooling	
User Interface	LED	
Communication	CAN (RS485 Optional)	

Technical Data	GW15.3-BAT-I-G11	GW20.4-BAT-I-G11
Weight-stacked(kg)	158	203
Dimension-stacked (W×H×D mm)	481*649*552	481*787*552
Ingress Protection Rating	IP20	
Fire safety equipment	Aerosol, Pack Level	
Certification*[3]		
Safety Regulation	For details, please visit our official website	
EMC	For details, please visit our official website	

Note:

1. Test conditions, 100% DOD, 0.2C charge & discharge at +25±2 °C for battery system at beginning life. System Usable Energy may vary with system configuration.
2. Actual Dis-/Charge Current and power derating will occur related to Cell Temperature and SOC. And, Max C-rate continuous time is affected by SOC, Cell Temperature, Atmosphere environment temperature .
3. Not all certifications & standards listed, check the official website for detail.

Technical Data	GW25.6-BAT-I-G10	GW30.7-BAT-I-G10	GW35.8-BAT-I-G10	GW40.9-BAT-I-G10	GW46.0-BAT-I-G10	GW51.2-BAT-I-G10	GW56.3-BAT-I-G10
Battery System							
Cell Type	LFP ($LiFePO_4$)						
Capacity (Ah)	100						
Pack Type/model	GW5.1-PACK-I-G10						

Technical Data	GW25.6-BAT-I-G10	GW30.7-BAT-I-G10	GW35.8-BAT-I-G10	GW40.9-BAT-I-G10	GW46.0-BAT-I-G10	GW51.2-BAT-I-G10	GW56.3-BAT-I-G10
Pack Nominal Energy (kWh)	5.12						
Pack Configuration	1P80S	1P96S	1P112S	1P128S	1P144S	1P160S	1P176S
Pack Weight（kg）	42.5						
Number of Packs	5	6	7	8	9	10	11
Nominal Energy (kWh)	25.6	30.7	35.8	40.9	46	51.2	56.3
Usable Energy (kWh) *1	25	30	35	40	45	50	55
Nominal Voltage (V)	256	307.2	358.4	409.6	460.8	512	563.2
Operating Voltage Range (V)	229.6~288.8	275.52~346.56	321.44~404.32	367.36~462.08	413.28~519.84	459.2~577.6	505.12~635.36
Charging Operating Temperature Range（℃）	0~+55						

Technical Data	GW25.6-BAT-I-G10	GW30.7-BAT-I-G10	GW35.8-BAT-I-G10	GW40.9-BAT-I-G10	GW46.0-BAT-I-G10	GW51.2-BAT-I-G10	GW56.3-BAT-I-G10
Discharging Operating Temperature Range（℃）	-20~+55						
Max. Charge/ Disharge Current (A) *2	100/110						
Max. Charge/ Discharge Rate *2	1C/1.1C						
Max. Charge/ Discharge power (kW) *2	25.6/28.1	30.7/33.7	35.8/39.4	40.9/44.9	46.0/50.6	51.2/56.3	56.3/61.9
Cycle Life	6000（25±2°C，0.5C，90%DOD，70%EOL）						
Depth of Discharge	1						
Efficiency							
Round-trip Efficiency	96%@100%DOD, 0.2C, 25±2℃						
General Data							
Operating Temperature Range (℃)	0~40℃						

Technical Data	GW25.6-BAT-I-G10	GW30.7-BAT-I-G10	GW35.8-BAT-I-G10	GW40.9-BAT-I-G10	GW46.0-BAT-I-G10	GW51.2-BAT-I-G10	GW56.3-BAT-I-G10
Storage Temperature (℃)	+35°C~+45°C(< 6 Months)； -20°C~+35°C(< 1 Year)						
Relative Humidity	5 ~ 85%， No condensation						
Max. Operating Altitude (m)	3000						
Cooling Method	Natural Cooling						
User Interface	LED						
Communication	CAN (RS485 Optional)						
Weight-rack mounted (kg)	-	-	-	-	-	495	540
Weight-stacked(kg)	248	293	338	383	428	472	517
Dimension-rack mounted (W×H×D mm)	-	-	-	-	-	543*1815*520	
Dimension-stacked (W×H×D mm)	481*925*552	481*1063*552	481*1201*552	481*1339*552	481*1477*552	481*1615*552	481*1753*552

Technical Data	GW25.6-BAT-I-G10	GW30.7-BAT-I-G10	GW35.8-BAT-I-G10	GW40.9-BAT-I-G10	GW46.0-BAT-I-G10	GW51.2-BAT-I-G10	GW56.3-BAT-I-G10
Ingress Protection Rating	IP20						
Fire safety equipment	Aerosol, Pack Level						
Certification *3							
Safety Regulation	For details, please visit our official website						
EMC	For details, please visit our official website						

Note:

1. Test conditions, 100% DOD, 0.2C charge & discharge at +25±2 °C for battery system at beginning life. System Usable Energy may vary with system configuration.
2. Actual Dis-/Charge Current and power derating will occur related to Cell Temperature and SOC. And, Max C-rate continuous time is affected by SOC, Cell Temperature, Atmosphere environment temperature .
3. Not all certifications & standards listed, check the official website for detail.

11.2.3 BAT-C Series 61.4-112.6kWh C&I Battery System

Technical Data	GW61.4-BAT-AC-G10	GW92.1-BAT-AC-G10	GW102.4-BAT-AC-G10	GW112.6-BAT-AC-G10
Battery System				
Cell Type	LFP ($LiFePO_4$)			
Cell Capacity (Ah)	100			

Technical Data	GW61.4-BAT-AC-G10	GW92.1-BAT-AC-G10	GW102.4-BAT-AC-G10	GW112.6-BAT-AC-G10
Rated Capacity (Ah)	200			
Pack Type/model	GW10.2-PACK-ACI-G10			
Pack Nominal Energy (kWh)	10.24			
Pack Configuration	2P96S	2P144S	2P160S	2P176S
Pack Weight（kg）	< 90			
Number of Packs	6	9	10	11
Nominal Energy (kWh)	61.4	92.1	102.4	112.6
Usable Energy (kWh) *1	60	90	100	110
Nominal Voltage (V)	307.2	460.8	512	563.2
Operating Voltage Range (V)	275.52~346.56	413.28~519.84	459.2~577.6	505.12~635.36
Charging Operating Temperature Range（℃）	-20~+55			
Discharging Operating Temperature Range（℃）	-20~+55			

Technical Data	GW61.4-BAT-AC-G10	GW92.1-BAT-AC-G10	GW102.4-BAT-AC-G10	GW112.6-BAT-AC-G10
Max. Charge/ Disharge Current (A) *2	180/220			
Rated Charge/ Discharge Current (A) *2	100/100			
Max. Charge/ Discharge Rate *2	0.9C/1.1C			
Max. Charge/ Discharge power (kW) *2	55.2/67.5	82.9/101.3	92.1/112.6	101.3/123.9
Rated Charge/ Discharge power (kW) *2	30.7	46.0	51.2	56.3
Cycle Life*3	≥6000 times until 70% SOH under 25±2°C.0.5C and 100% DOD			
Depth of Discharge	100%			
Efficiency				
Round-trip Efficiency*3	96%@100%DOD, 0.2C, 25±2℃			
General Data				
Operating Temperature Range (℃)	-20~+55			
Storage Temperature (℃)	+35~+45 (<6 Months); -20~+35 (<1)			
Relative Humidity	0 ~ 100%（Condensationless）			

Technical Data	GW61.4-BAT-AC-G10	GW92.1-BAT-AC-G10	GW102.4-BAT-AC-G10	GW112.6-BAT-AC-G10
Max. Operating Altitude (m)	4000			
Cooling Method	Air Conditioner			
User Interface	LED			
Communication	CAN (RS485 Optional)			
Weight (kg)	< 950	< 1220	< 1310	< 1400
Dimension (W×H×Dmm)	1055*2000*1055			
Noise Emission (dB)	≤70			
Ingress Protection Rating	IP55	IP55	IP55	IP55
Anti-corrosion Class	C4（C5-M Optional）			
Fire safety equipment*4	Aerosol (Pack&Cabinet Level)			
Certification *5				
Safety Regulation	IEC62619/IEC63056/IEC60730/IEC62477/VDE2510/ISO13849 IEC62040/N140/EU 2023/1542/UN38.3			
EMC	IEC/EN61000-6-1/2/3/4			

Technical Data	GW61.4-BAT-AC-G10	GW92.1-BAT-AC-G10	GW102.4-BAT-AC-G10	GW112.6-BAT-AC-G10
Note: 1. Test conditions, 100% DOD, 0.2C charge & discharge at +25±2 °C for battery system at beginning life. System Usable Energy may vary with system configuration. 2. Actual Dis-/Charge Current and power derating will occur related to Cell Temperature and SOC. And, Max C-rate continuous time is affected by SOC, Cell Temperature, Atmosphere environment temperature. Rated Charge/ Disharge Current & Rated Charge/ Discharge power only for Australia. 3. For Australian DOD is 98%. 4. Aerosol (Cabinet Level) before May 30th, Aerosol (Pack&Cabinet Level) after May 30th. 5. Not all certifications & standards listed, check the official website for detail.				

11.3 Smart Meter Technical Specifications

11.3.1 GM330

Technical Parameters		GM330
Measurement Range	Supported Type of Electrical Supply System	Three-phase, split-phase, single-phase
	Voltage Range L-L (Vac)	172~817
	Voltage Range L-N (Vac)	100~472
	Nominal Frequency (Hz)	50/60
	CT Ratio	nA:5A
Communication Parameters	Communication Method	RS485
	Communication Distance (m/ft)	1000/3280
Accuracy Parameters	Voltage/Current	Class 0.5
	Active Energy	Class 0.5
	Reactive Energy	Class 1

Technical Parameters		GM330
General Parameters	Dimensions (WxHxD mm/in)	72x85x72/2.83x3.35×2.83
	Housing	4 modules
	Weight (g/lb)	240/0.53
	Mounting Method	DIN rail
	User Interface	4 LEDs, reset button
	Power Consumption (W)	≤5
Environmental Parameters	IP Rating	IP20
	Operating Temperature Range (°C/°F)	-30~+70/-22~+158
	Storage Temperature Range (°C/°F)	-30~70/-22~+158
	Relative Humidity (non-condensing)	0~95%
	Max. Operating Altitude (m/ft)	3000/9842
Certification Parameters	Certificate	UL1741/ANSI

11.3.2 GM3000

Technical Parameters		GM3000
Application		Three-Phase
Voltage	Nominal Voltage	3L+N/400V
	Voltage Range	100V~240V
	Frequency	50Hz/60Hz
Current	Rated Current	CT in: 120A/40mA;
	Current Range	0.48A~120A
Power Consumption		<3W
Data monitoring		Voltage/Current/Active Power/Reactive Power/Power Factor/Frequency
Energy calculation		Active/Reactive Power
Accuracy	Voltage/Current	Class I

	Active	Class I
	Reactive Power	Class II
Communication		RS485 (Maximum rate9600/ModBusprotocol/Maximum communication cable length100m)
Display		LED、USB、Resetbutton
Device	Dimensions （Length x Width x Heightmm)	36 x 85 x 66.5
	Weight (g)	450
	Ingress Protection Rating	IP20(Indoor)
	Mounting Method	Backplate mounting
Operating temperature		-25 ~ +60° C
Storage Temperature		-25 ~ +60° C
Humidity		<95% Non-condensing
Operating Altitude(m)		< 2000m
Safe Service Life (Years)		≥25

11.3.3 GMK330

Model	**GMK330**
Measurement Range	
Supported Type of Electrical Supply System	1P2W/3P3W/3P4W
Operating voltage (Vac)*	3P4W：90~264 L-N 3P3W：90~264 L-L
Frequency (Hz)	50/60
CT Ratio	120A: 40mA 200A: 50mA*
Number of CTs	3
Accuracy Parameters	
Voltage/Current	Class 0.5

Model	GMK330
Active Energy	Class 0.5
Reactive Energy	Class 1
Communication Parameters	
Communication Method	RS485
Communication distance (m)	1000
General Parameters	
Dimensions (W*H*D mm)	72*85*72
Housing	4 modules
Weight (g)	240
Mounting Method	DIN rail
User Interface	4 LEDs, reset button
Power Consumption (W)	< 5
Environmental Parameters	
IP Rating	IP20
Operating Temperature Range (℃)	-30-+70
Storage Temperature range (℃)	-30-+70
Relative Humidity (non-condensing)	0-95%
Max. Operating Altitude (m)	3000

*Supports 1.1× voltage connection.

11.4 Smart Communication Stick Technical

Specifications

11.4.1 4G Kit-CN-G21

Product model	4G Kit-CN-G21
Device management	
Maximum number of supported inverters	1
Power supply parameters	
Input voltage (V)	5
Power consumption (W)	≤4
Interface type	USB
Communication Parameters	
4G/3G/2G	LTE-FDD：B1/B3/B5/B8 LTE-TDD：B34/B39/B40/B41
GNSS positioning	BeiDou, GPS
Bluetooth	Bluetooth V5.0
Mechanical Parameters	
Dimensions (W×H×D mm)	48.3*95.5*32.1
Weight (g)	87
Indicator light	LED* 2
Mounting Method	Plug and play
SIM card size	Micro sim, 15mm*12mm
Environmental Parameters	
Operating Temperature Range (℃)	-30~+65
Storage temperature range (℃)	-40~+70
Relative Humidity	0-100%
IP Rating	IP66
Max. Operating Altitude (m)	4000
Standards met	

Product model	4G Kit-CN-G21
Certification	SRRC、CTA

11.4.2 4G Kit-CN-G20

Product model	4G Kit-CN-G20
Device management	
Maximum number of supported inverters	1
Power supply parameters	
Input voltage (V)	5
Power consumption (W)	≤4
Interface type	USB
Communication Parameters	
4G/3G/2G	LTE-FDD：B1/B3/B5/B8 LTE-TDD：B34/B39/B40/B41
GNSS positioning	/
Bluetooth	Bluetooth V5.0
Mechanical Parameters	
Dimensions (W×H×D mm)	48.3*95.5*32.1
Weight (g)	87
Indicator light	LED* 2
Mounting Method	Plug and play
SIM card size	Micro sim, 15mm*12mm
Environmental Parameters	
Operating Temperature Range (℃)	-30~+65
Storage temperature range (℃)	-40~+70
Relative Humidity	0-100%
IP Rating	IP66
Max. Operating Altitude (m)	4000

Product model	4G Kit-CN-G20
Standards met	
Certification	SRRC、CTA

11.4.3 WiFi/LAN Kit-20

Technical Parameters		WiFi/LAN Kit-20
Output Voltage (V)		5
Power Consumption (W)		≤2
Communication Interface		USB
Communication Parameters	Ethernet	10M/100Mbps Auto-negotiation
	Wireless	IEEE 802.11 b/g/n @2.4 GHz
	Bluetooth	Bluetooth V4.2 BR/EDR and Bluetooth LE standards
Mechanical Parameters	Dimensions (W×H×D mm)	48.3*159.5*32.1
	Weight (g)	82
	Ingress Protection Rating	IP65
	Mounting Method	USB Port Plug/Unplug
Operating Temperature Range (℃)		-30~+60
Storage Temperature Range (℃)		-40~+70
Relative Humidity		0-95%
Max. Operating Altitude (m)		4000

11.4.4 Ezlink3000

Indicator Light/Silkscreen	Color	Status	Description
Power LED	Blue	Flashing	Flashing = Communication stick is operating normally.
		Off	Off = Communication stick is powered off.
	Green	Steady on	Steady on = Communication stick is connected to the server.

Indicator Light/Silkscreen	Color	Status	Description
Communication LED			Double flash = Communication stick is Not Connected to the router.
			Four flashes = Communication stick is connected to the router and Not Connected to the server.
RELOAD	-	-	• Short press for 1-3 seconds to restart the communication stick. • Long press for 6-10 seconds to restore factory settings. Quickly double-click to enable Bluetooth signal (lasts only 5 minutes).

11.5 Ezmanager3000 Technical Specifications

Model	EzManager3000
Device management	
Energy storage inverter	≤ 4
Grid-tied inverter	≤ 4
EV charger	≤ 2
Heat pump	1 (SG-Ready)
Shelly device	≤ 12
Power supply	
Power adapter	AC input: 100~240V, 50/60Hz DC output: 12V
DC input (V)	12V
Power consumption (W)	≤7
Communication Interface	
RS485	COM*4
LAN	1
WIFI	802.11 b/g/n
Bluetooth	Bluetooth 5.2

Model	EzManager3000
Digital/analog input/output	DI*4、DO*2、CAN*1、AI*1
Power output port	12V, 100mA
Communication Protocols	
Ethernet	Modbus-TCP
RS485	Modbus-RTU
User Interface	
LED	LED*4
USB	USB 2.0*1
Mechanical Parameters	
Dimensions (W×H×D mm)	99*85.6*71
Weight (kg)	0.2
Mounting Method	Wall-mounted, DIN-rail, desktop installation
Environmental Parameters	
Operating Temperature Range (℃)	-30~+60
Storage Temperature Range (℃)	-40~+70
Relative Humidity	0 ~ 95% (non-condensing)
Max. Operating Altitude (m)	3000
Ingress Protection Rating	IP20
Standards met	
Certification	CE-RED（EN18031）、RCM

12 Appendix

12.1 FAQ

12.1.1 How to Perform Meter/CT Auxiliary Detection?

The Meter Connect Check function can check whether the meter CT is connected correctly and the current operating status of the meter and CT.

- Method 1:

1. Go to**[Home]** > **[Settings]** > **[Meter/CT Auxiliary Detection]**, and enter the detection page.
2. Tap Start Detection and wait for the detection to complete, then view the detection results.

- Method 2:

1. Tap > **[System Setup]** > **[Quick Setting]** > **[Meter/CT Assisted Test]**, and enter the detection page.
2. Tap Start Detection and wait for the detection to complete, then view the detection results.

12.1.2 How to Upgrade the Device Version

Via Firmware Information, you can view or upgrade:
The inverter DSP version, ARM version, communication module software version, battery BMS version, DCDC version, etc.

- **Upgrade prompt:**

When the user opens the App, an upgrade prompt pops up on the home page, and the user can choose whether to upgrade. If they choose to upgrade, follow the on-screen prompts to complete the upgrade.

- **Regular upgrade:**

Go to**[Home]** > **[Settings]** > **[Firmware Information]**, and enter the Firmware Information screen.

Tap Check for Updates; if a new version is available, follow the on-screen prompts to complete the upgrade.

- **Mandatory Upgrade:**

The App will push upgrade notifications. Users must perform the upgrade as prompted; otherwise, the App will be unavailable. Complete the upgrade by following the on-screen instructions.

Inverter Software Version Upgrade

- The inverter supports software upgrade via aUSB flash drive.
- Before using aUSB flash drive to upgrade the device, contact the after-sales service center to obtain the software upgrade package and upgrade method.

12.2 Abbreviations

Abbreviation	English Description	Chinese Description
Ubatt	Battery Voltage Range	Battery Voltage Range
Ubatt,r	Nominal Battery Voltage	Rated Battery Voltage
Ibatt,max (C/D)	Max. Charging Current Max. Discharging Current	Max. Charge/Discharge Current
EC,R	Rated Energy	Rated Energy
UDCmax	Max.Input Voltage	Max. Input Voltage
UMPP	MPPT Operating Voltage Range	MPPT Voltage Range
IDC,max	Max. Input Current per MPPT	Max. Current from Grid per MPPT
ISC PV	Max. Short Circuit Current per MPPT	Max. Short-Circuit Current per MPPT
PAC,r	Nominal Output Power	Rated output power
Sr (to grid)	Nominal Apparent Power Output to Utility Grid	Rated Grid-Connected Output Apparent Power
Smax (to grid)	Max. Apparent Power Output to Utility Grid	Max. Grid-Connected Output Apparent Power
Sr (from grid)	Nominal Apparent Power from Utility Grid	Rated Apparent Power to Grid for Purchasing Electricity from Grid

Abbreviation	English Description	Chinese Description
Smax (from grid)	Max. Apparent Power from Utility Grid	Max. Apparent Power to Grid for Purchasing Electricity from Grid
UAC,r	Nominal Output Voltage	Rated Output Voltage
fAC,r	Nominal AC Grid Frequency	Output Voltage/Frequency
IAC,max(to grid)	Max. AC Current Output to Utility Grid	Max. Grid-Connected Output Current
IAC,max(from grid)	Max. AC Current From Utility Grid	Max. Current from Grid
P.F.	Power Factor	Power Factor
Sr	Back-up Nominal apparent power	Off-Grid Rated Apparent Power
Smax	Max. Output Apparent Power (VA) Max. Output Apparent Power without Grid	Max. Apparent Power to Grid
IAC,max	Max. Output Current	Max. Current to Grid
UAC,r	Nominal Output Voltage	Max. Output Voltage
fAC,r	Nominal Output Freqency	Rated Output Voltage/Frequency
Toperating	Operating Temperature Range	Operating Temperature Range
IDC,max	Max. Input Current	Max. Current from Grid
UDC	Input Voltage	Input Voltage
UDC,r	DC Power Supply	DC Input
UAC	Power Supply/AC Power Supply	Input Voltage Range / AC Input
UAC,r	Power Supply/Input Voltage Range	Input Voltage Range / AC Input
Toperating	Operating Temperature Range	Operating Temperature Range
Pmax	Max Output Power	Maximum Power
PRF	TX Power	Transmit Power
PD	Power Consumption	Power Consumption
PAC,r	Power Consumption	Power Consumption
F (Hz)	Frequency	Frequency

Abbreviation	English Description	Chinese Description
ISC PV	Max. Input Short Circuit Current	Maximum Input Short-Circuit Current
Udcmin-Udcmax	Range of input Operating Voltage	Operating Voltage Range
UAC,rang(L-N)	Power Supply Input Voltage	Adapter Input Voltage Range
Usys,max	Max System Voltage	Maximum System Voltage
Haltitude,max	Max. Operating Altitude	Max. Operating Altitude
PF	Power Factor	Power Factor
THDi	Total Harmonic Distortion of Current	Current Harmonics
THDv	Total Harmonic Distortion of Voltage	Voltage Harmonics
C&I	Commercial & Industrial	Commercial and Industrial
SEMS	Smart Energy Management System	Smart Energy Management System
MPPT	Maximum Power Point Tracking	Maximum Power Point Tracking
PID	Potential-Induced Degradation	Potential Induced Degradation
Voc	Open-Circuit Voltage	Open-Circuit Voltage
Anti PID	Anti-PID	Anti-PID
PID Recovery	PID Recovery	PID Recovery
PLC	Power-line Commucation	Power Line Carrier Communication
Modbus TCP/IP	Modbus Transmission Control / Internet Protocol	Modbus over TCP/IP
Modbus RTU	Modbus Remote Terminal Unit	Modbus over Serial Link
SCR	Short-Circuit Ratio	Short-Circuit Ratio
UPS	Uninterruptable Power Supply	Uninterruptible Power Supply
ECO mode	Economical Mode	Economic Mode
TOU	Time of Use	Usage Time
ESS	Energy Stroage System	Energy Storage System
PCS	Power Conversion System	Power Conversion System
RSD	Rapid shutdown	Rapid Shutdown
EPO	Emergency Power Off	Emergency Power Off
SPD	Surge Protection Device	Lightning Protection

Abbreviation	English Description	Chinese Description
ARC	zero injection/zero export Power Limit / Export Power Limit	Power Limit
DRED	Demand Response Enabling Device	Command Response Device
RCR	Ripple Control Receiver	-
AFCI	AFCI	AFCI DC Arc Fault Protection
GFCI	Ground Fault Circuit Interrupter	Grounding Failure Interrupter
RCMU	Residual Current Monitioring Unit	Residual Current Monitoring Device
FRT	Fault Ride Through	Fault Ride-Through
HVRT	High Voltage Ride Through	High Voltage Ride-Through
LVRT	Low Voltage Ride Through	Low Voltage Ride-Through
EMS	Energy Management System	Energy Management System
BMS	Battery Management System	Battery Management System
BMU	Battery Measure Unit	Battery Data Acquisition Unit
BCU	Battery Control Unit	Battery Control Unit
SOC	State of Charge	Battery State of Charge
SOH	State of Health	Battery State of Health
SOE	State Of Energy	Battery Remaining Energy
SOP	State Of Power	Battery Charge/Discharge Capability
SOF	State Of Function	Battery Functional Status
SOS	State Of Safety	Safe State
DOD	Depth of discharge	Depth of Discharge

12.3 Terminology Explanation

- **Overvoltage Category Definitions**
  - **Overvoltage Category I**: Equipment connected to circuits in which measures are taken to limit transient Overvoltage to an appropriately low level.
  - **Overvoltage Category II**: Energy-consuming equipment supplied from the fixed installation. Such equipment includes appliances, portable tools, and other household and similar loads. If special requirements for the reliability and availability of such equipment apply, Overvoltage Category III shall be used.
  - **Overvoltage Category III**: Equipment in fixed installations for which the

reliability and availability requirements must meet special requirements. This includes switchgear and industrial equipment permanently connected to the fixed installation.
    - **Overvoltage Category IV**: Equipment used at the origin of the installation, including measuring instruments and primary overcurrent Protection equipment.
- **Explanation of Wet Location Categories**

Environmental Parameters	Level		
	3K3	4K2	4K4H
Temperature Range	0~+40℃	-33~+40℃	-33~+40℃
Humidity Range	5% to 85%	15% to 100%	4% to 100%

- **Environmental Category Definitions:**
    - **Outdoor inverter**: ambient air temperature range is -25°C to +60°C, suitable for Pollution Degree 3 environments;
    - **Indoor Type II inverter**: ambient air temperature range is -25°C to +40°C, suitable for Pollution Degree 3 environments;
    - **Indoor Type I inverter**: ambient air temperature range is 0°C to +40°C, suitable for Pollution Degree 2 environments;
- **Pollution Degree Category Definitions**
    - **Pollution Degree 1**: no pollution or only dry, non-conductive pollution;
    - **Pollution Degree 2**: normally only non-conductive pollution occurs, but temporary conductive pollution caused by occasional condensation must be considered;
    - **Pollution Degree 3**: conductive pollution occurs, or non-conductive pollution becomes conductive due to condensation;
    - **Pollution Degree 4**: persistent conductive pollution, such as pollution caused by conductive dust or rain and snow.

12.4 Meaning of Battery SN Code



LXD10DSC0002

Digits 11 to 14 of the product SN code are the production time code.
The production date in the figure above is 2023-08-08

- The 11th and 12th digits are the last two digits of the production year; for example, 2023 is represented by 23;
- The 13th digit is the production month; for example, August is represented by 8; Details are as follows:

Month	January to September	October	November	December
Month Code	1~9	A	B	C

- The 14th digit indicates the production date; for example, the 8th day is denoted by 8;
  Numerals are preferred; for example, 1–9 represent days 1–9, A represents the 10th day, and so on. Letters I and O are not used to avoid confusion. Details are as follows:

Production day	1	2	3	4	5	6	7	8	9
Code	1	2	3	4	5	6	7	8	9

Production day	10	11	12	13	14	15	16	17	18
Code	A	B	C	D	E	F	G	H	J

Production day	21	22	23	24	25	26	27	28	29
Code	M	N	P	Q	R	S	T	U	V

12.5 Safety Regulation Country

No.	Safety standard name	No.	Safety standard name
Europe			
1	IT-CEI 0-21	56	IE-LV-72A
2	IT-CEI 0-16	57	IE-ESB-C&D(< 110kV)
3	DE LV with PV	58	IE-EirGrid-110kV
4	DE LV without PV	59	PT-D
5	DE-MV	60	EE
6	ES-A	61	NO
7	ES-B	62	FI-A
8	ES-C	63	FI-B
9	ES-D	64	FI-C
10	ES-island	65	FI-D
11	BE	66	UA-A1
12	FR-LV	67	UA-A2
13	FR-island-50Hz	68	EN 50549-1
14	FR-island-60Hz	69	EN 50549-2
15	type A-PL_V.1.1	70	DK-West-B-MVHV
16	type B-LV-PL_V.1.1	71	DK-East-B-MVHV
17	type C-PL_V.1.1	72	DK-West-C-MVHV
18	type D-PL_V.1.1	73	DK-East-C-MVHV
19	NL-16/20A	74	DK-West-D-MVHV
20	NL-A	75	DK-East-D-MVHV
21	NL-B	76	FR-Reunion

No.	Safety standard name	No.	Safety standard name
22	NL-C	77	BE-LV（>30kVA）
23	NL-D	78	BE-HV
24	SE-A	79	CH-B
25	SE MV	80	NI-G99-A
26	SK-A	81	NI-G99-B
27	SK-B	82	NI-G99-C
28	SK-C	83	NI-G99-D
29	HU	84	IE-LV-170kVA
30	CH-A	85	IE-MV&HV-200kVA
31	CY	86	DE-HV
32	GR	87	FR-MV
33	DK-West-A	88	CZ-A1/A2-09
34	DK-East-A	89	DE-EHV
35	DK-West-B	90	IE-EirGrid-400KV
36	DK-East-B	91	IE-EirGrid-220KV
37	AT < 1kV	92	IE-EirGrid-66KV
38	AT > 1kV	93	IE-ESB-B
39	BG	94	IE-ESB-D(≥110kV)
40	Czech	95	type B-MV-PL_V.1.1
41	CZ-A1-09	96	GB-G99-A HV
42	CZ-A2-09	97	GB-G99-B LV
43	CZ-B1/B2-09	98	GB-G99-C LV
44	CZ-C	99	UA-B

No.	Safety standard name	No.	Safety standard name
45	CZ-D	100	UA-C
46	RO-A	101	UA-D
47	RO-B	102	UK-G98
48	RO-D	103	UK-G99-A LV
49	GB-G98	104	UK-G99-B LV
50	GB-G99-A LV	105	UK-G99-C LV
51	GB-G99-B HV	106	CZ-A1
52	GB-G99-C HV	107	UK-A-MV
53	GB-G99-D	108	UK-B-MV
54	NI-G98	109	UK-C-MV
55	IE-LV-16/25A	-	-
Global			
1	60Hz-Default	6	IEC 61727-60Hz
2	50Hz-Default	7	Warehouse
3	127Vac-60Hz-Default	8	IEC61727-480Vac-60Hz
4	127Vac-50Hz-Default	9	IEC61727-480Vac-50Hz
5	IEC 61727-50Hz		
Americas			
1	Argentina-220V-LV	38	LUMAPR-2024-220Vac-3P
2	US-208Vac	39	LUMAPR-2024-240Vac-3P
3	US-240Vac	40	Cayman
4	Mexico-220Vac	41	Brazil-220Vac
5	Mexico-440Vac	42	Brazil-208Vac
6	US-480Vac	43	Brazil-230Vac

No.	Safety standard name	No.	Safety standard name
7	US-208Vac-3P	44	Brazil-240Vac
8	US-220Vac-3P	45	Brazil-254Vac
9	US-240Vac-3P	46	Brazil-127Vac
10	US-CA-208Vac	47	Brazil-ONS
11	US-CA-240Vac	48	Barbados
12	US-CA-480Vac	49	Chile-BT
13	US-CA-208Vac-3P	50	Chile-MT-A
14	US-CA-220Vac-3P	51	Chile MT-B
15	US-CA-240Vac-3P	52	Colombia
16	US-HI-208Vac	53	Colombia<0.25MW-208Vac-1P
17	US-HI-240Vac	54	Colombia<0.25MW-120Vac-3P
18	US-HI-480Vac	55	IEEE 1547-208Vac
19	US-HI-208Vac-3P	56	IEEE 1547-220Vac
20	US-HI-220Vac-3P	57	IEEE 1547-240Vac
21	US-HI-240Vac-3P	58	IEEE 1547-230Vac
22	US-Kauai-208Vac	59	Colombia<0.25MW-127Vac-3P
23	US-Kauai-240Vac	60	Colombia>5MW
24	US-Kauai-480Vac	61	Mexico-127V
25	US-Kauai-208Vac-3P	62	Mexico-240V
26	US-Kauai-220Vac-3P	63	US-O&R-208Vac
27	US-Kauai-240Vac-3P	64	US-O&R-240Vac
28	US-ISO-NE-208Vac	65	US-O&R-480Vac
29	US-ISO-NE-240Vac	66	US-O&R-208Vac-3P

No.	Safety standard name	No.	Safety standard name
30	US-ISO-NE-480Vac	67	US-O&R-220Vac-3P
31	US-ISO-NE-208Vac-3P	68	US-O&R-240Vac-3P
32	US-ISO-NE-220Vac-3P	69	Brazil-277Vac
33	US-ISO-NE-240Vac-3P	70	Chile-BT ≤9MW
34	LUMAPR-2024-208Vac	71	Chile-MT ≤9MW
35	LUMAPR-2024-240Vac	72	Chile > 9MW
36	LUMAPR-2024-480Vac	73	Mexico-277Vac
37	LUMAPR-2024-208Vac-3P		
Oceania			
1	Australia-A	4	Newzealand
2	Australia-B	5	Newzealand:2015
3	Australia-C	6	NZ-GreenGrid
Asia			
1	China A	33	Israel-MV
2	China B	34	Israel-HV
3	China Higher Voltage	35	Vietnam
4	China Highest Voltage	36	Malaysia-LV
5	China Power Station	37	Malaysia-MV
6	China Shandong	38	DEWA-LV
7	China Hebei	39	DEWA-MV
8	China PCS	40	Saudi Arabia-220V-LV
9	Taiwan	41	JP-690Vac-50Hz
10	Hong Kong	42	JP-690Vac-60Hz
11	China Northeast	43	Srilanka-MV/HV

No.	Safety standard name	No.	Safety standard name
12	Thailand-MEA	44	IEC 61727-127Vac-50Hz
13	Thailand-PEA	45	IEC 61727-127Vac-60Hz
14	Mauritius	46	JP-550Vac-50Hz
15	Korea	47	JP-550Vac-60Hz
16	India	48	India-Higher
17	India-CEA	49	JP-220Vac-50Hz
18	Pakistan	50	JP-220Vac-60Hz
19	Philippines	51	Saudi Arabia-127V-LV
20	Philippines-127Vac	52	Srilanka-LV >1MW
21	JP-200Vac-50Hz	53	China-YN
22	JP-200Vac-60Hz	54	GB/T 29319-LV
23	JP-440Vac-50Hz	55	GB/T 29319-MV
24	JP-440Vac-60Hz	56	Philippines-277Vac
25	JP-420Vac-50Hz	57	JP-360Vac-50Hz
26	JP-420Vac-60Hz	58	JP-360Vac-60Hz
27	JP-480Vac-50Hz	59	JP-320Vac-50Hz
28	JP-480Vac-60Hz	60	JP-320Vac-60Hz
29	Srilanka-LV<1MW	61	JP-340Vac-50Hz
30	Singapore	62	JP-340Vac-60Hz
31	Israel-OG	63	JP-380Vac-50Hz
32	Israel-LV	64	JP-380Vac-60Hz
Africa			
1	Mauritius	5	Ghana-LV

No.	Safety standard name	No.	Safety standard name
2	South Africa-LV	6	Ghana-HV
3	South Africa-B-MV	7	South Africa-A3-LV
4	South Africa-C-MV	8	Nigeria

13 Contact Details

GoodWe Technologies Co., Ltd.
No. 90 Zijin Rd., New District, Suzhou, China
en.goodwe.com
service@goodwe.com