V2.2 2026-09-15

Residential Smart Inverter

ET Series 12-30kW

· Lynx Home F G2
· Lynx Home F
· Lynx Home F Plus+
· Lynx Home D
· Lynx D G2

Solutions Manual

GOODWE

Copyright Statement

Copyright Statement

Copyright©GoodWe Technologies Co., Ltd. 2026. All rights reserved.

Without authorization from GoodWe Technologies Co., Ltd., no part of this manual may be reproduced, distributed, or uploaded to public networks or other third-party platforms in any form.

Trademark Authorization

GOODWEand otherGOODWEtrademarks used in this manual are owned by GoodWe Technologies Co., Ltd. All other trademarks or registered trademarks mentioned in this manual are the property of their respective owners.

NOTICE

Due to product version upgrades or other reasons, the content of this document may be updated periodically. Unless otherwise agreed, the content of this document does not replace the safety precautions on the product labels. All descriptions in this document are for use guidance only.

Preface

Overview

This document mainly introduces product information, installation and wiring, configuration and commissioning, troubleshooting, and maintenance for an energy storage system consisting of an inverter, battery system, and smart meter. Before installing and using the product, read this manual carefully to understand product safety information and become familiar with product functions and features. The document may be updated periodically; please obtain the latest version and more product information from the official website.

Applicable Products

The energy storage system includes the following products:

Product Type	Product Information	Description
Inverter	ET 12-30kW	Rated output power12kWto30kW。
Battery system	Lynx Home F G2	Energy storage capacity per cluster6.4kWhto28.8kWh。 Parallel-cluster energy storage capacity can reach up to230.4kWh
	Lynx Home F、Lynx Home F Plus+	Energy storage capacity per cluster6.6kWhto16.38kWh。 Parallel-cluster energy storage capacity can reach up to131.04kWh。
	Lynx Home D	Energy storage capacity per cluster5kWh。 Parallel-cluster energy storage capacity can reach up to40kWh。

Product Type	Product Information	Description
	Lynx D G2	Energy storage capacity per cluster: 5.12-9kWh. Parallel-cluster energy storage capacity can reach up to108kWh。
Meter	GM3000	The monitoring module in the energy storage system can detect system operating voltage, current, and other information.
	GM330	
	GMK330	
Communication module	WiFi/LAN Kit-20	System operation information can be uploaded to the monitoring platform viaWiFiorLANsignals.
	LS4G Kit-CN、4G Kit-CN、4G Kit-CN-G20or4G Kit-CN-G21(China only)	System operation information can be uploaded to the monitoring platform via4Gsignals.
	Wi-Fi Kit	System operation information can be uploaded to the monitoring platform viaWiFisignals.
	Ezlink3000	In parallel operation scenarios, connect to the master inverter. System operation information can be uploaded to the monitoring platform viaWiFiorLANsignals.

Symbol Definitions

⚠DANGER
Indicates a high potential hazard that, if not avoided, will result in death or serious injury.
⚠WARNING
Indicates a potentially hazardous situation of moderate risk which, if not avoided, could result in death or serious injury.
⚠CAUTION

Indicates a potentially hazardous situation of low risk which, if not avoided, may result in moderate or minor injury.
NOTICE
Emphasizes and supplements the content, and may also provide tips or tricks for optimized product use that can help you solve a problem or save time.

Table of Contents

1 Safety Precautions 12
1.1 General Safety 12
1.2 Personnel Requirements 13
1.3 System Safety 14
1.3.1 PV String Safety 16
1.3.2 Inverter Safety 17
1.3.3 Battery Safety 18
1.3.4 Meter Safety 21
1.4 EU Declaration of Conformity 21
1.4.1 Equipment with Wireless Communication Function 21
1.4.2 Devices Without Wireless Communication Function 21
1.5 EU Declaration of Conformity (Battery) 22
1.6 Safety Symbols and Certification Mark Description 23
2 System Introduction 26
2.1 System Overview 26
2.2 Product Overview 35
2.2.1 Inverter 36
2.2.2 Battery 38
2.2.2.1 Lynx Home F、Lynx Home F Plus+ 38
2.2.2.2 Lynx Home F G2 39
2.2.2.3 Lynx Home D 40

2.2.2.4 Lynx D G2 44
2.2.3 Smart Meter 46
2.2.4 Smart Communication Stick 48
2.3 Supported Grid Types 49
2.4 System Mode 49
2.5 Functional Features 60
3 Device Inspection and Storage 64
3.1 Device Inspection 64
3.2 Delivered Items 64
3.2.1 Inverter Delivered Items 64
3.2.2 Battery Delivery Items 68
3.2.2.1 Lynx Home F 、Lynx Home F Plus+ 68
3.2.2.2 Lynx Home F G2 69
3.2.2.3 Battery Delivery Items (Lynx Home D) 70
3.2.2.4 Battery Delivery Items (Lynx D G2) 74
3.2.2.4.1 Base Delivery Items 75
3.2.2.4.2 Battery Mounting Bracket Delivery Items 76
3.2.2.4.3 Off-Wall Bracket Deliverables 76
3.2.3 Smart Meter Deliverables (GM3000) 77
3.2.4 Smart Meter Deliverables GM330&GMK330 77
3.2.4.1 Accessory List 77
3.2.5 Smart Communication Dongle Deliverables 78

3.3 Equipment Storage 80
4 Installation 83
4.1 System Installation and Commissioning Process 83
4.2 Installation Requirements 84
4.2.1 Installation Environment Requirements 84
4.2.2 Installation Space Requirements 87
4.2.3 Tool Requirements 89
4.3 Equipment Handling 91
4.4 Installing the Inverter 93
4.5 Install the Battery 96
4.5.1 Install the Lynx Home F Series 96
4.5.1.1 Install Lynx Home F 97
4.5.1.2 Install Lynx Home F Plus+ 98
4.5.1.3 Install Lynx Home F G2 100
4.5.2 Install Lynx Home D 103
4.5.3 Installing Lynx D G2 107
4.6 Install the Meter 112
5 System Wiring 114
5.1 System Wiring Electrical Block Diagram 115
5.2 System Wiring Detailed Diagram 117
5.2.1 Detailed Wiring Diagram for Single-Unit System 118
5.2.2 Detailed Wiring Diagram for Parallel System 124

5.3 Material Preparation 129
5.3.1 Switch Preparation 130
5.3.2 Cable Preparation 134
5.4 Connect the Protection Ground Cable 137
5.4.1 Inverter Grounding 138
5.4.2 Battery System Grounding 138
5.5 Connect PV Cables 140
5.6 Connect AC Cables 142
5.7 Connecting the Battery Cables 144
5.7.1 Connect the Inverter and Battery Power Cables 151
5.7.2 Connect the Inverter-to-Battery Communication Cable 158
5.7.3 Connect the Power Cables Between Lynx Home D Batteries 161
5.7.4 Connect the Battery Communication Cable and Termination Resistor 163
5.7.5 Install the Battery Protective Cover 165
5.8 Connect the Meter Cable 167
5.9 Connect the Inverter Communication Cable 172
5.10 Connect the Smart Communication Dongle 179
6 System Trial Operation 182
6.1 Checks Before System Power-On 182
6.2 System Power-On 182
6.3 Indicator Light Introduction 186
6.3.1 Inverter Indicator Lights 186

6.3.2 Battery Indicator Lights 187
6.3.2.1 Lynx Home F Series 187
6.3.2.2 Lynx Home D 189
6.3.2.3 Lynx D G2 191
6.3.3 Smart Meter Indicator Lights 191
6.3.4 Smart Communication Stick Indicator 192
7 System Commissioning and Power Plant Monitoring 198
7.1 Conduct Device Commissioning and Testing and Plant Monitoring via the SEMS+ App 198
7.2 Conduct Device Commissioning and Testing and Plant Monitoring via SEMS+ WEB 199
8 System Maintenance 201
8.1 System Power-Off 201
8.2 Equipment Removal 203
8.3 Equipment Scrapping 204
8.4 Periodic Maintenance 204
8.5 Fault 205
8.5.1 View Fault/Alarm Details 206
8.5.2 Fault Information and Handling Methods 206
8.5.2.1 System Fault 206
8.5.2.2 Inverter Fault 208
8.5.2.2.1 Fault Handling (Fault Codes F01-F40) 208
8.5.2.2.2 Troubleshooting (Fault Codes F41-F80) 226

8.5.2.2.3 Fault Handling (Fault Codes F81-F121) 235
8.5.2.2.4 Fault Handling (Fault Codes F122-F163) 245
8.5.2.2.5 Fault Symptom Troubleshooting 257
8.5.3 Lynx Home D Battery Fault 276
9 Technical Specifications 280
9.1 Inverter Parameters 280
9.2 Battery Parameters 295
9.2.1 Lynx home F 295
9.2.2 Lynx home F Plus+ 297
9.2.3 Lynx home F G2 298
9.2.4 Lynx home D 300
9.2.5 Lynx D G2 301
9.3 Smart Meter Technical Specifications 305
9.3.1 GM330 305
9.3.2 GM3000 306
9.3.3 GMK330 307
9.4 Smart Communication Dongle Technical Specifications 309
9.4.1 4G Kit-CN-G21 309
9.4.2 4G Kit-CN-G20 310
9.4.3 WiFi/LAN Kit-20 311
9.5 Ezmanager3000 Technical Specifications 312
10 Appendix 314

10.1 FAQ 314
10.1.1 How to Perform Meter/CT Auxiliary Detection? 314
10.1.2 How to Upgrade the Device Version 314
10.2 Abbreviations 315
10.3 Terminology Explanation 318
10.4 Meaning of Battery SN Code 319
10.5 Safety Regulation Country 320
10.6 Australia Safety Regulations 326
11 Contact Details 332

1 Safety Precautions

Always comply with the safety precautions contained in this document when operating the equipment.

⚠WARNING
The equipment has been designed and tested in strict accordance with safety regulations. However, as electrical equipment, relevant safety instructions must be observed before any operation on the equipment; improper operation may result in serious injury or property damage.

1.1 General Safety

NOTICE

- Due to product version upgrades or other reasons, the content of this document may be updated periodically. Unless otherwise agreed, the content of this document does not replace the safety precautions on the product labels. All descriptions in this document are for use guidance only.
- Read this document carefully before installing the equipment to understand the product and precautions.
- All operations on the equipment must be performed by professional and qualified electrical technicians who are familiar with the relevant standards and safety regulations applicable at the project site.
- When operating the equipment, use insulated tools and wear personal protective equipment to ensure personal safety. When touching electronic components, wear ESD gloves, ESD wrist straps, anti-static clothing, etc., to provide Protection for the equipment against electrostatic damage.
- Unauthorized disassembly or modification may cause equipment damage, which is not covered by the warranty.
- Equipment damage or personal injury caused by failure to install, use, or configure the equipment in accordance with this document or the corresponding user manual is not within the scope of the equipment manufacturer's responsibility.
- For more product warranty information, please visit the official website:https://emea.goodwe.com/warranty。

1.2 Personnel Requirements

NOTICE

To ensure the safety, compliance, and efficiency of the entire process of equipment transportation, installation, wiring, operation, and maintenance, operations must be performed by professional or qualified personnel.

1. Professional or qualified personnel include:
   - Personnel who have mastered the working principles of the equipment, system structure, and knowledge related to risks and hazards, and who have received professional operation training or have extensive practical experience.
   - Personnel who have received relevant technical and safety training, possess certain operational experience, are able to recognize the dangers that specific operations may pose to themselves, and are able to take protective measures to minimize risks to themselves and others.
   - Qualified electrical technicians who meet the regulatory requirements of the country/region where they are located.
   - Personnel with a degree in electrical engineering / an advanced diploma or equivalent qualification in an electrical discipline / a professional practice qualification in the electrical field, and with at least 2/3/4 years of experience in testing and supervisory work using safety standards for electrical equipment.
2. Personnel involved in special tasks such as electrical work, work at height, and special equipment operation must hold valid qualification certificates required at the equipment location.
3. Medium-voltage equipment operations must be performed by certified high-voltage electricians.
4. Equipment and component replacement is only permitted to be performed by authorized personnel.

1.3 System Safety

DANGER

- Before making electrical connections, disconnect all upstream switches of the equipment to ensure that the equipment is de-energized. Live-line operation is strictly prohibited; otherwise, hazards such as electric shock may occur.
- For devices that support connection to PV strings, the PV input end has weak surge current withstand capability. It is strictly prohibited to use a DC voltage source to directly energize through the PV port. If power-up from the PV port is required, follow the steps below. If the equipment is damaged due to non-compliant operation, it is considered human-induced damage and is not covered by product warranty coverage.
  1. First, limit the output current of the DC voltage source within the Max. Current from Grid allowed by the PV port
  2. Then close the DC Switch of the inverter
  3. Finally, slowly increase the DC source output voltage from zero to the target value at a rate of ≤50 V/s.
- To prevent personal danger or equipment damage caused by live operation, a circuit breaker must be added on the voltage input side of the equipment.
- All operations such as transportation, storage, installation, operation, use, and maintenance shall comply with applicable laws, regulations, standards, and specifications.
- The specifications of cables and components used for electrical connections shall comply with local laws, regulations, standards, and specifications.
- Use the cable connectors supplied with the package to connect equipment cables. If connectors of other models are used, any resulting equipment damage is not within the manufacturer's scope of responsibility.
- Ensure that all equipment cables are correctly connected, tightened, and not loose. Improper wiring may cause poor contact or equipment damage.
- The equipment's Protection ground wire must be securely connected.
- To provide Protection for the equipment and its components against damage during transportation, ensure that transportation personnel have received professional training. Record the operation steps during transportation, keep the equipment balanced, and prevent the equipment from falling.
- The equipment is heavy. Allocate corresponding personnel according to the equipment Weight to prevent the equipment from exceeding the Weight range that a person can carry and causing injury to personnel.
- Ensure that the equipment is placed stably and not tilted. Equipment tipping may cause equipment damage and personal injury.

⚠WARNING

- During equipment installation, prevent the terminals from bearing weight; otherwise, terminal damage may occur.
- Avoid excessive tensile force on cables; otherwise, poor connections may occur. During wiring, reserve an appropriate cable length to avoid keeping cables taut.
- Correctly secure and support cables to prevent cable self-weight, tensile force, bending force, torsional force, or other external mechanical stress from acting on terminals or connectors for extended periods.
- Ensure that the Protection grounding cable is reliably connected and that appropriate slack is reserved. Under external mechanical stress such as accidental tensile force, ensure that the Protection grounding cable does not disconnect before other conductors.
- Cables of the same type should be bundled together, and cables of different types should be routed at least 30 mm apart. Do not intertwine or cross-route them.
- Using cables in high-temperature environments may cause aging or damage to the insulation layer. The distance between cables and heat-generating devices or the outer periphery of heat source areas shall be at least 30 mm.

1.3.1 PV String Safety

⚠WARNING

- Ensure that the module frames and mounting system are well grounded.
- After the DC cables are connected, ensure that the cable connections are tightened and not loose. Improper wiring may cause poor contact or high impedance and damage the inverter.
- Use a multimeter to measure the positive and negative poles of the DC cables, ensuring that the polarity is correct and no reverse connection occurs; and that the voltage is within the permitted range.
- Use a multimeter to measure the DC cables and ensure that the positive and negative poles are correct and no reverse connection occurs; the voltage should be lower than the maximum DC input voltage. Damage caused by reverse connection and Overvoltage is not within the manufacturer's scope of responsibility.
- The PV string output does not support grounding. Before connecting the PV string to the inverter, ensure that the minimum insulation resistance to ground of the PV string meets the minimum insulation impedance requirement (R = Max. Input Voltage (V)/30 mA).
- Do not connect the same PV string to multiple inverters; otherwise, inverter damage may occur.
- Photovoltaic modules used with the inverter must comply with IEC 61730 Class A standards.
- When the PV string input voltage or input current is high, the inverter output power may be derated.

1.3.2 Inverter Safety

⚠WARNING

- Ensure that the voltage and frequency at the grid connection point comply with the inverter's grid-tied specifications.
- It is recommended to add Protection devices such as circuit breakers or fuses on the inverter AC side. The rating of the Protection devices must be greater than 1.25 times the inverter AC output Max. Current.
- If the inverter triggers an Arc Failure alarm fewer than 5 times within 24 hours, the alarm can be automatically cleared. After the 5th Arc Failure alarm, the inverter shuts down for Protection; the inverter can operate normally only after the fault is cleared.
- If no battery is configured in the PV system, using the BACK-UP function is not recommended; otherwise, there may be a risk of system power outage.
- Variations in grid voltage and frequency may cause derating of the inverter output power.

1.3.3 Battery Safety

⚠DANGER

- Before operating equipment in the system, ensure that the equipment is powered off to avoid electric shock hazards. During equipment operation, strictly follow all safety precautions in this manual and the safety labels on the equipment.
- Do not disassemble, modify, or repair the battery or control box without official authorization from the equipment manufacturer; otherwise, electric shock hazards or equipment damage may occur, and any resulting losses are not within the scope of the equipment manufacturer's responsibility.
- Do not impact, pull, drag, squeeze, or step on the equipment, and do not place the battery in fire; otherwise, the battery may explode.
- Do not place the battery in a high-temperature environment. Ensure there is no heat source near the battery and that it is not exposed to direct sunlight. If the ambient temperature exceeds 60°C, a fire may occur.
- If the battery or control box has obvious defects, cracks, damage, or other conditions, do not use it. Battery damage may cause electrolyte leakage.
- Do not move the battery system while the battery is operating. If you need to replace or add batteries, contact the after-sales service center.
- A Battery Short Circuit may cause personal injury; the instantaneous high current caused by the short circuit can release a large amount of energy and may cause a fire.
- The battery DC circuit breaker shall comply with the requirements of AS/NZS 5139.
- The same battery is only permitted to be connected to one energy storage inverter. It is prohibited to directly connect the same battery to multiple energy storage inverters. Multiple inverters sharing one battery may cause abnormal reverse current or circulating current, and cause GFCI leakage Protection and battery overcurrent; in severe cases, it may damage the battery and inverter.

⚠WARNING

- Battery Current may be affected by factors such as temperature, humidity, and weather conditions, which may cause battery current limiting and affect the load-carrying capability.
- If the battery cannot start, contact the after-sales service center as soon as possible. Otherwise, the battery may be permanently damaged.
- Perform regular inspection and maintenance of the battery in accordance with the battery maintenance requirements.

Emergency Measures for Emergency Situations

- Battery Electrolyte Leakage
  If the battery module leaks electrolyte, avoid contact with the leaked liquid or gas. The electrolyte is corrosive, and contact may cause skin irritation and chemical burns. If you accidentally come into contact with leaked material, perform the following actions:
  - Inhalation: Evacuate from the contaminated area and seek medical help immediately.
  - Eye contact: Rinse with clean water for at least 15 minutes and seek medical help immediately.
  - Skin contact: Thoroughly wash the contacted area with soap and clean water and seek medical help immediately.
  - Ingestion: Induce vomiting and seek medical assistance immediately.
- Fire
  - When the battery temperature exceeds 150°C, there is a fire risk, and a burning battery may release toxic and harmful gases.
  - To avoid fire, ensure that carbon dioxide, Novec1230, or FM-200 fire extinguishers are available near the equipment.
  - When extinguishing a fire, do not use ABC dry powder fire extinguishers. Firefighters must wear protective clothing and self-contained breathing apparatus.
- Battery Fire Suppression Function Triggered
  For batteries equipped with the optional fire suppression function, perform the following operations after the fire suppression function is triggered:
  - Immediately disconnect the main power switch to ensure that no current flows

through the battery system.
- Perform a preliminary visual inspection of the battery for damage, deformation, leakage, or odor, and inspect the battery enclosure, connectors, and cables.
- Use a temperature sensor to measure the battery and ambient temperature to ensure there is no overheating risk.
- Isolate and mark damaged batteries and dispose of them properly in accordance with local regulatory requirements.

1.3.4 Meter Safety

⚠WARNING

If the grid voltage fluctuation exceeds 265 V, long-term overvoltage operation may damage the meter. It is recommended to add a fuse with a Rated Current of 0.5 A on the voltage input side of the meter for Protection of the meter.

1.4 EU Declaration of Conformity

1.4.1 Equipment with Wireless Communication Function

GoodWe Technologies Co., Ltd. hereby declares that ET series devices with a wireless communication module comply with the requirements of Directive 2014/53/EU.
The full text of the EU declaration of conformity is available at the following internet address:
https://en.goodwe.com/Ftp/EN/Downloads/Certificate/GW_ET 12-30kW_EU Declaration of Conformity_MULTI.pdf

- Radio Equipment Directive 2014/53/EU (RED)
- Restrictions of Hazardous Substances Directive 2011/65/EU and (EU) 2015/863 (RoHS)
- Waste Electrical and Electronic Equipment 2012/19/EU
- Registration, Evaluation, Authorization and Restriction of Chemicals (EC) No 1907/2006 (REACH)

1.4.2 Devices Without Wireless Communication Function

GoodWe Technologies Co., Ltd. hereby declares that ET series devices without a wireless communication module meet the requirements of the following directives:

- Electromagnetic compatibility Directive 2014/30/EU (EMC)
- Electrical Apparatus Low Voltage Directive 2014/35/EU (LVD)
- Restrictions of Hazardous Substances Directive 2011/65/EU and (EU) 2015/863 (RoHS)
- Waste Electrical and Electronic Equipment 2012/19/EU
- Registration, Evaluation, Authorization and Restriction of Chemicals (EC) No 1907/2006 (REACH)

1.5 EU Declaration of Conformity (Battery)

GoodWe Technologies Co., Ltd. hereby declares that the Lynx Home F, Lynx Home F Plus+,
Lynx Home F G2, Lynx Home D, and Lynx D G2 series batteries comply with the requirements of the following directives.
The full text of the EU declaration of conformity is available at the following internet address:

- Lynx Home F、Lynx Home F Plus+：https://en.goodwe.com/Ftp/EN/Downloads/Certificate/GW_Lynx F_EU Declaration of Conformity_MULTI.pdf
- Lynx Home F G2：
  - https://en.goodwe.com/Ftp/EN/Downloads/Certificate/GW_Lynx-F-G2_EU-Declaration-of-Conformity_POLY-1.pdf
  - https://en.goodwe.com/Ftp/EN/Downloads/Certificate/GW_Lynx-F-G2_EU-Declaration-of-Conformity_POLY-2.pdf
- Lynx Home D：
  https://en.goodwe.com/Ftp/EN/Downloads/Certificate/GW_LynxD_EU-Declaration-of-Conformity_POLY.pdf
- Lynx D G2：
  https://en.goodwe.com/Ftp/EN/Downloads/Certificate/GW_Lynx-D-G2_EU-Declaration-of-Conformity_POLY.pdf

- Electrical Apparatus Low Voltage Directive 2014/35/EU (LVD)
- Electromagnetic compatibility Directive 2014/30/EU (EMC)

- Restrictions of Hazardous Substances Directive 2011/65/EU and (EU) 2015/863 (RoHS)
- Regulation (EU) 2023/1542 Article 12 - Safety of stationary battery energy storage systems
- Regulation (EU) 2023/1542 Article 10 - Performance and durability requirements for rechargeable industrial batteries, LMT batteries and electric vehicle batteries
- Regulation (EU) 2023/1542 Article 14 - Information on the state of health and expected lifetime of batteries
- Regulation (EU) 2023/1542 Article 6 - Restrictions of substances
- Waste Electrical and Electronic Equipment 2012/19/EU
- Registration, Evaluation, Authorization and Restriction of Chemicals (EC) No 1907/2006 (REACH)

1.6 Safety Symbols and Certification Mark Description

⚠DANGER

- After equipment installation, labels and warning signs on the enclosure must be clearly visible and must not be obstructed, altered, or damaged.
- The following enclosure warning label descriptions are for reference only; refer to the labels actually used on the equipment.

No.	Symbol	Meaning
1		Potential hazards exist during equipment operation. Take protective measures when operating the equipment.
2		High voltage hazard. High voltage is present during equipment operation. Before operating the equipment, ensure that the equipment is powered off.
3		The inverter surface is hot. Do not touch it during equipment operation; otherwise, burns may result.
4		Use the equipment properly. Under extreme conditions, there is a risk of equipment explosion.

No.	Symbol	Meaning
5		The battery contains flammable materials. Beware of fire.
6		The equipment contains corrosive electrolyte. Avoid contact with leaked electrolyte or volatilized gases.
7		Delayed discharge. After the equipment is powered off, wait 5 minutes until the equipment is fully discharged.
8		Keep the equipment away from open flames or ignition sources.
9		Keep the equipment away from areas accessible to children.
10		Use the equipment properly. Under extreme conditions, there is a risk of equipment explosion.
11		The battery contains flammable materials. Beware of fire.
12		Do not lift the equipment after the battery system wiring is completed or while the battery system is in operation.
13		Do not extinguish with water.
14		Read the product manual carefully before operating the equipment.
15		Wear personal protective equipment during installation, operation, and maintenance.
16		The equipment must not be disposed of as household waste. Dispose of the equipment in accordance with local laws and regulations, or return it to the equipment manufacturer.
17		Do not directly disconnect or plug/unplug the DC terminals during equipment operation.
18		Connection point for the Protection earthing conductor.
19		Recycling symbol.

No.	Symbol	Meaning
20	CE	CE Certification mark.
21	TÜVRheinland CERTIFIED	TUV mark.
22	RCM	RCM mark.

2 System Introduction

2.1 System Overview

The household smart inverter solution integrates the inverter, battery, smart meter, smart communication dongle, and other devices. In the PV system, it converts solar energy into electrical energy to meet household electricity demand. In the system, energy IoT devices identify the overall power condition and control electrical equipment, thereby enabling intelligent management of power supply to loads, storage in the battery, or output to the grid, etc.

⚠WARNING

- Battery model selection shall be based on the inverter and battery compatibility list. For battery requirements in the same system, such as whether models can be mixed, whether capacities must be consistent, etc., please refer to the battery user manual for the corresponding model or contact the battery manufacturer for relevant requirements. Inverter and battery compatibility list:https://en.goodwe.com/Ftp/EN/Downloads/User%20Manual/GW_Battery%20Compatibility%20Overview-EN.pdf。
- Due to product version upgrades or other reasons, the document content will be updated periodically. For the compatibility between inverters and IoT products, please refer to:https://en.goodwe.com/Ftp/EN/Downloads/User%20Manual/GW_Compatibility-list-of-GoodWe-inverters-and-IoT-products-EN.pdf。
- PV systems are not suitable for connection to equipment that relies on a stable power supply, such as life-sustaining medical equipment. Please ensure that system power-off will not cause personal injury.
- If no battery is configured in the PV system, using the BACK-UP function is not recommended; otherwise, there may be a risk of system power outage.
- The BACK-UP port does not support connection to autotransformers or isolation transformers.
- Battery Current may be affected by factors such as temperature, humidity, and weather conditions, which may cause battery current limiting and affect the load-carrying capability.

⚠WARNING

- The inverter has a UPS function with a switching time of <10 ms. Please ensure that the BACK-UP load capacity is < the inverter's Rated Power. Otherwise, the UPS function may fail during a Grid Power Outage.
- If no battery is configured in the PV system, using the BACK-UP function is not recommended; otherwise, there may be a risk of system power outage.
- For detailed networking and wiring schemes for each scenario, please refer to: System Wiring Detailed Diagram.
- When the inverter is in off-grid mode, it can supply power to ordinary household loads for normal use. However, the following loads need to be restricted, such as:
  - inductive load: inductive load power < 0.4 times the inverter's rated output power.
  - Capacitive load: total power ≤ 0.66 x inverter rated output power.
  - When three-phase loads are connected to the BACK-UP port, only three-phase loads with a neutral (N) wire are supported. Loads without an N wire are not supported; otherwise, the loads may work abnormally or be damaged.
  - The inverter does not support half-wave loads. Half-wave loads: some old household appliances that do not comply with EMC standards (such as hair dryers using half-wave rectification, small heaters, etc.) may not work properly.
- In a fully off-grid inverter system, if the battery is exposed to prolonged low-light or rainy weather and cannot be recharged in time, it may be over-discharged, resulting in battery performance degradation or damage. To ensure long-term stable operation of the system, avoid fully discharging the battery. Recommended measures are as follows:
  - During off-grid operation, set the minimumSOCProtection threshold. It is recommended to set the off-grid batterySOClower limit to30%。
  - WhenSOCapproaches the Protection threshold, the system will automatically enter load limiting or Protection mode.
  - If sunlight is insufficient for several consecutive days and the batterySOCis too low, the battery should be replenished in a timely manner through external energy sources (such as a generator or grid-assisted charging).
  - Check the battery status regularly to ensure it is within a safe operating range.
  - It is recommended to fully charge and fully discharge the battery once every six months to calibrateSOCaccuracy.
- For detailed networking and wiring schemes for each scenario, please refer

⚠WARNING

to:5.2.System Wiring Detailed Diagram(Page 117)。

Off-grid load capacity description				
Load type	GW15K-ET GW20K-ET GW25K-ET GW29.9K-ET GW30K-ET	GW12KL-ET GW18KL-ET	GW15K-ET GW20K-ET GW25K-ET GW29.9K-ET GW30K-ET	GW12KL-ET GW18KL-ET
	Single-phase		Three-phase	
Rated Power of a single inductive load (kVA)	2.2	1.1	4	2
Total Rated Power of multiple units of inductive load (kVA)	2.2	1.1	8	4
Capacitive load (kVA)	0.33Pn/3		0.33Pn	
Half-wave load	Not supported			

Off-grid load capacity description
Note: • Pn: Inverter rated output power. • When two or more units are paralleled, the allowable total Rated Power for inductive load = Rated Power of a single inductive load × number of paralleled units × 80%. • Half-wave load: some old household appliances that do not comply withEMCstandards (such as hair dryers using half-wave rectification, small heaters, etc.). • If the calculated total Rated Power of multiple inductive load units is less than the Rated Power of the largest single inductive load, the total Rated Power of the loads shall be taken as the Rated Power of that single unit. • When an inductive load is connected, it is recommended to use a frequency converter.

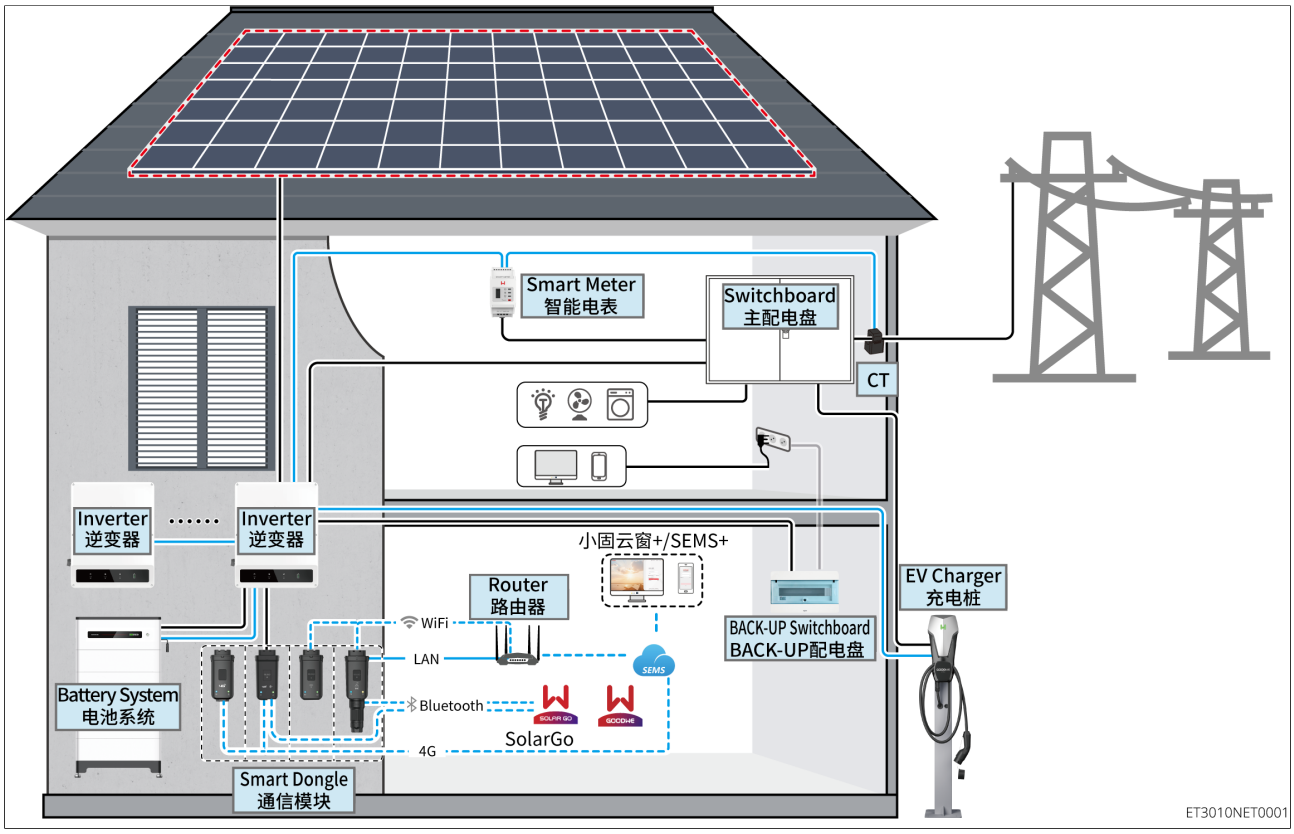

Figure1 System networking diagram

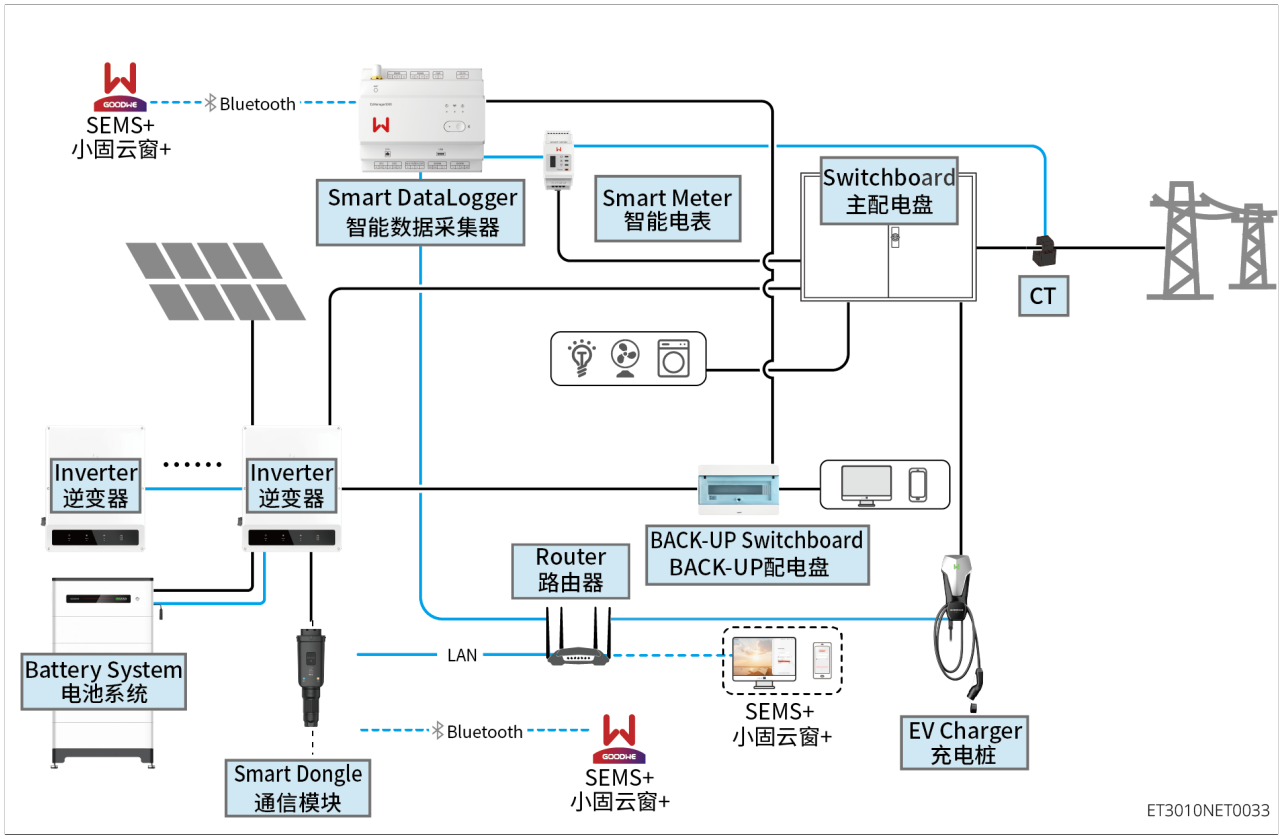

Figure2 Networking diagram with EzManager3000

Device type	Model	Description
Inverter	GW12KL-ET GW18KL-ET GW15K-ET GW20K-ET GW25K-ET GW29.9K-ET GW30K-ET	• Supports up to 4 inverters to form a parallel system • Battery ready models cannot form a parallel system when the battery function is not activated. • Only units with the same AC output voltage can form a parallel system. • In coupled scenarios, using dual meters can simultaneously monitor the power generation of the grid-tied inverter and load consumption. The following version requirements must be met: ◦ Inverter ARM software version 15.441 or later. ◦ Inverter DSP software version 11.11060 or later. ◦ SolarGo version 6.9.0 or later. ◦ Software version requirements for inverter compatibility with Lynx D G2 battery: ▪ Inverter ARM software version 18.455 or later. ▪ InverterDSP software version 14.14014 or later.
Battery system	**Lynx Home F G2** LX F6.4-H-20 LX F9.6-H-20 LX F12.8-H-20 LX F16.0-H-20 LX F19.2-H-20 LX F22.4-H-20 LX F25.6-H-20 LX F28.8-H-20	

Device type	Model	Description
	Lynx Home F、Lynx Home Plus+ LX F6.6-H LX F9.8-H LX F13.1-H LX F16.4-H	• The Lynx Home F battery system does not support parallel cluster operation. • The system supports up to 8 battery system clusters in parallel. • Battery systems of different versions cannot be mixed for parallel cluster operation. • The GW12KL-ET and GW18KL-ET inverters, when used with a battery system, can only be paired with Lynx Home F G2 series batteries; batteries of other series are not supported. • LXF6.4-H-20 and LXF9.6-H-20 batteries are only supported for use with GW12KL-ET and GW18KL-ET inverters; other inverters are not supported. • The Lynx Home D battery supports usable capacity expansion, with a maximum of 2 groups (each group can stack up to 4 battery modules), totaling 8 battery modules for usable capacity expansion. If capacity expansion is required, contact your dealer to purchase batteries.
	Lynx Home D LX D5.0-10	

Device type	Model	Description
	Lynx D G2 GW5.1-BAT-D-G20 GW5.1-BAT-D-G21 GW8.3-BAT-D-G20 GW8.3-BAT-D-G21 GW6.0-BAT-D-G20 GW9.0-BAT-D-G20	• Battery modules of different models can be mixed. • The system supports5-108kWh, meeting different power and energy matching requirements. • The battery heating film is optional. Only models equipped with a heating film can enable the Battery Heating function. Do not use batteries without a heating film in low-temperature environments; otherwise, the equipment may fail to operate. • GW5.1-BAT-D-G20, GW8.3-BAT-D-G20, GW5.1-BAT-D-G21, GW8.3-BAT-D-G21, GW6.0-BAT-D-G20 , GW9.0-BAT-D-G20 When mixed, the battery heating function is unavailable. • If the system requires mixed battery use and split-type capacity expansion, ensure that the BMS software version is V06 or later and the DCDC version is V06 or later. • Battery BMS software version 07 or later and DCDC version 08 or later are required for compatibility with this series of inverters.

Device type	Model	Description
Smart Data Logger	EzManager3000	EzManager supports unified dispatch management of home energy. It supports station-level Power Control functions such as AI Mode, self-consumption, and grid-connected Power Control, enabling station-level energy optimization. • Connect smart meters, grid-tied inverters, etc. via RS485. • If third-party grid-tied inverters are used in the system, their data cannot be collected by EzManager, which may affect EMS dispatch. Use with caution. • Software version requirements: ◦ For single-inverter operation: the EzManager3000 software version must be V00 or later. ◦ For parallel inverter operation: the EzManager3000 software version must be V04 or later.

Device type	Model	Description
Smart Meter	• GM3000 • GM330 • GMK330	• GM3000: supplied with the inverter; CT replacement is not supported; CT ratio: 120 A: 40 mA • GM330: CT can be purchased from GoodWe or by yourself; CT ratio requirement: nA: 5A ◦ nA: CT primary input current; n ranges from 200 to 5000 ◦ 5A: CT secondary output current • GMK330: CT is shipped with the meter; CT ratio: ◦ 120A: 40mA ◦ 200 A: 50 mA (Brazil only)
Communication module	• WiFi/LAN Kit-20 • Wi-Fi Kit • LS4G Kit-CN, 4G Kit-CN, 4G Kit-CN-G20, or 4G Kit-CN-G21 (China only) • Ezlink3000	• For single-inverter operation, use the WiFi/LAN Kit-20, Wi-Fi Kit, LS4G Kit-CN, 4G Kit-CN, 4G Kit-CN-G20, or 4G Kit-CN-G21 module. If using the WiFi/LAN Kit-20 to replace the Wi-Fi Kit, upgrade the inverter ARM firmware to version 08.401 or later before replacing it with the WiFi/LAN Kit-20. • When using EzManager3000 for networking, the WiFi/LAN Kit-20 software version must be 05 or later. • For single-inverter operation of GW12KL-ET and GW18KL-ET model inverters, only the WiFi/LAN Kit-20 module is supported. • During parallel operation, only the master inverter needs to be connected to the Ezlink3000; slave inverters do not need a communication module. • The Ezlink3000 firmware version must be 05 or later.

2.2 Product Overview

2.2.1 Inverter

In a PV system, the inverter controls and optimizes energy flow through an integrated energy management system. The power generated by the PV system can be supplied to loads, stored in batteries, or exported to the grid.

NOTICE
Inverters of different power ranges differ in appearance; the actual product shall prevail.

No.	Model	Rated output power	Rated output voltage	Number of battery ports
1	GW12KL-ET	12kW	220V, 3L/N/PE	1
2	GW18KL-ET	18kW		2
3	GW15K-ET	15kW	380/400V，3L/N/PE	1
4	GW20K-ET	20kW		1
5	GW25K-ET	25kW		2
6	GW29.9K-ET	29.9kW		2
7	GW30K-ET	30kW		2

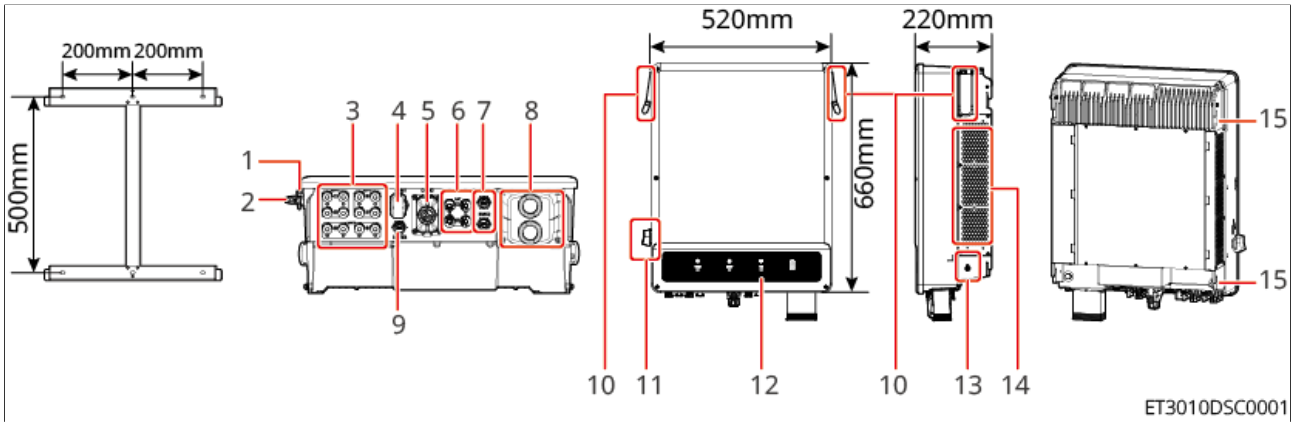

Figure3 Component Description

Component Description

No.	Component/Silkscreen	Description
1	DC Switch lock hole	Australia only.
2	DC Switch	Controls connection or disconnection of the DC input.
3	PVInput Terminals	Used to connectPVmodule DC input cables. • GW15K-ET，GW20K-ET，GW12KL-ET x 2 • GW25K-ET，GW29.9K-ET，GW30K-ET，GW18KL-ET x 3
4	Communication Module Port	Can connect to a communication module; supports 4G and Wi-Fi/LAN modules
5	Communication port	Connect the communication cable; supports communication with DRED, Remote Shutdown, Rapid Shutdown, RCR, EMS, and generator
6	Battery connection port	Connect the battery DC cable. • GW15K-ET，GW20K-ET，GW12KL-ET x 1 • GW25K-ET，GW29.9K-ET，GW30K-ET，GW18KL-ET x 2

7	BMS communication port	Connect the battery communication cable. • GW15K-ET，GW20K-ET，GW12KL-ET x 1 • GW25K-ET，GW29.9K-ET，GW30K-ET，GW18KL-ET x 2
8	AC port	Connect the AC cable; ON-GRID and BACK-UP ports.
9	METER communication port	Connect the smart meter.
10	Handle	Carry the inverter.
11	Indicator light	Indicates the operating status of the inverter.
12	Protection grounding terminal	Connect the enclosure Protection ground cable
13	Fan	Inverter heat dissipation
14	Inverter mounting slot	Mount and lock the inverter.

Australian junction box dimensions

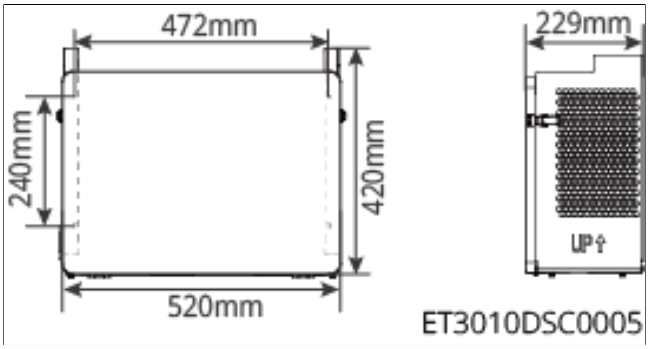

Figure4 Australian junction box dimensions

2.2.2 Battery

The battery system can store and release energy according to the requirements of the PV energy storage system. The input and output ports of the energy storage system are high-voltage DC.

2.2.2.1 Lynx Home F、Lynx Home F Plus+

Lynx Home Fseries battery system consists of a main control box and battery modules. The battery system can store and release energy according to the requirements of the PV energy storage system. The input and output ports of the energy storage system are both high-voltage DC.

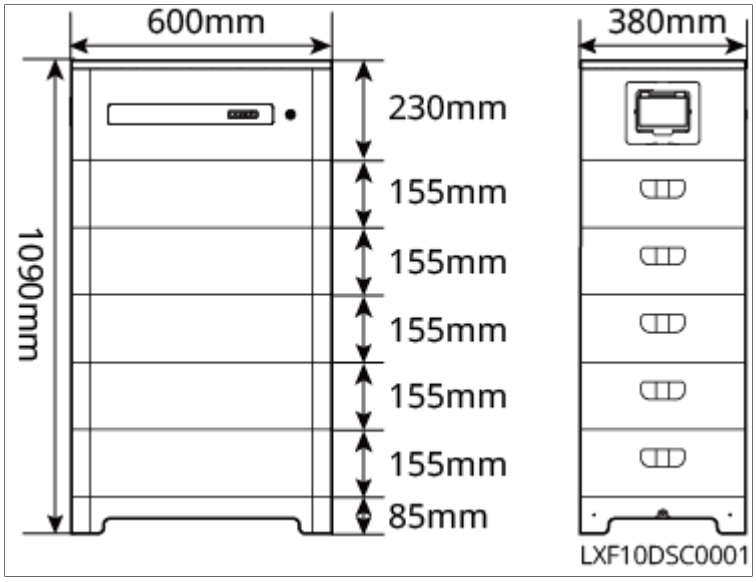

Figure5 Battery dimensions

No.	Model	Number of battery modules	Usable energy (kWh)
1	LX F6.6-H	2	6.55kWh
2	LX F9.8-H	3	9.83kWh
3	LX F13.1-H	4	13.1kWh
4	LX F16.4-H	5	16.38kWh

2.2.2.2 Lynx Home F G2

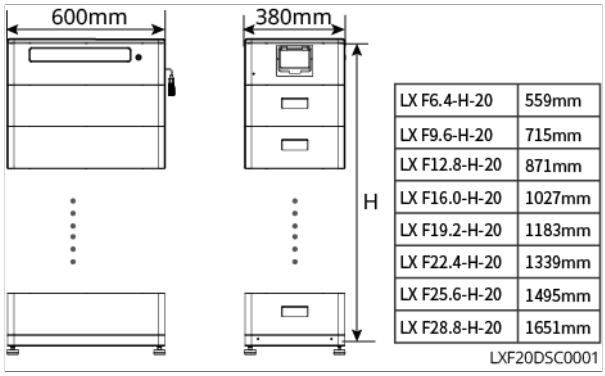

Figure6 Battery dimensions

No.	Model	Number of battery modules	Usable energy (kWh)
1	LX F6.4-H-20	2	6.4kWh
2	LX F9.6-H-20	3	9.6kWh
3	LX F12.8-H-20	4	12.8kWh
4	LX F16.0-H-20	5	16.0kWh
5	LX F19.2-H-20	6	19.2kWh
6	LX F22.4-H-20	7	22.4kWh
7	LX F25.6-H-20	8	25.6kWh
8	LX F28.8-H-20	9	28.8kWh

2.2.2.3 Lynx Home D

In the Lynx Home D battery system, the BMS and battery modules are integrated into one unit.

NOTICE
Optional base or bracket mounting.

Appearance description:

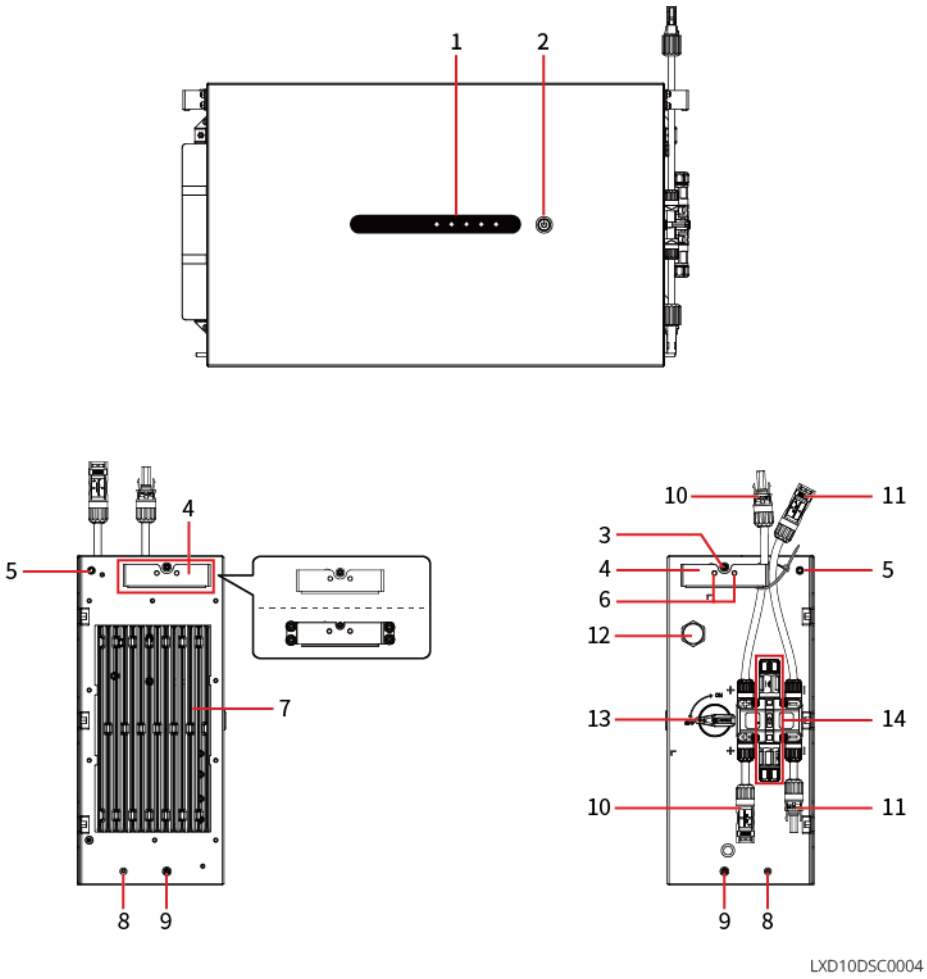

No.	Component	Description
1	Battery SOC indicator	

No.	Component	Description
2	Multi-function button indicator	• SOC indicator: displays the battery SOC status. • Multi-function Button Indications ◦ Battery black start function: When no PV power is generated in the PV system and the grid is abnormal, if the inverter cannot operate normally, press and hold the multi-function button for 2 s to start the battery system and start the inverter. The inverter can then enter off-grid mode, and the battery supplies power to the loads. ◦ Press and hold the multi-function button for >5 s to power off the battery system. • When the SOC indicator and multi-function button indicator are displayed in combination, they can indicate the battery system operating status, alarm status, and fault status.
3	Inter-battery fixing hole or grounding terminal	Used to secure two batteries to each other or to connect the ground wire.
4	Handle	Used for carrying the battery.
5	Battery-to-wall fixing hole	Used to secure the battery to the wall.
6	Side protective cover fixing hole	Used to install the side protective cover.
7	Heat sink	Used for heat dissipation of the battery system.
8	Side protective cover fixing hole	Used to install the side protective cover.
9	Inter-battery fixing hole	Used to secure two batteries to each other.
10	Battery positive connection terminal	Connects to the positive terminal of the battery or inverter.

No.	Component	Description
11	Battery negative connection terminal	Connects to the negative terminal of the battery or inverter.
12	Vent valve	Used to balance the internal and external pressure of the battery.
13	Battery power switch	Battery power input/output switch.
14	Communication port	Connects the communication cable or termination resistor between the battery and inverter, and between batteries.

Single battery dimensions:

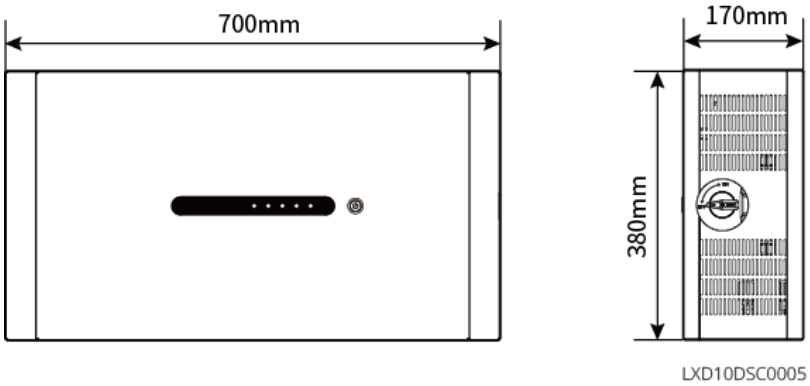

Battery BANK dimensions:

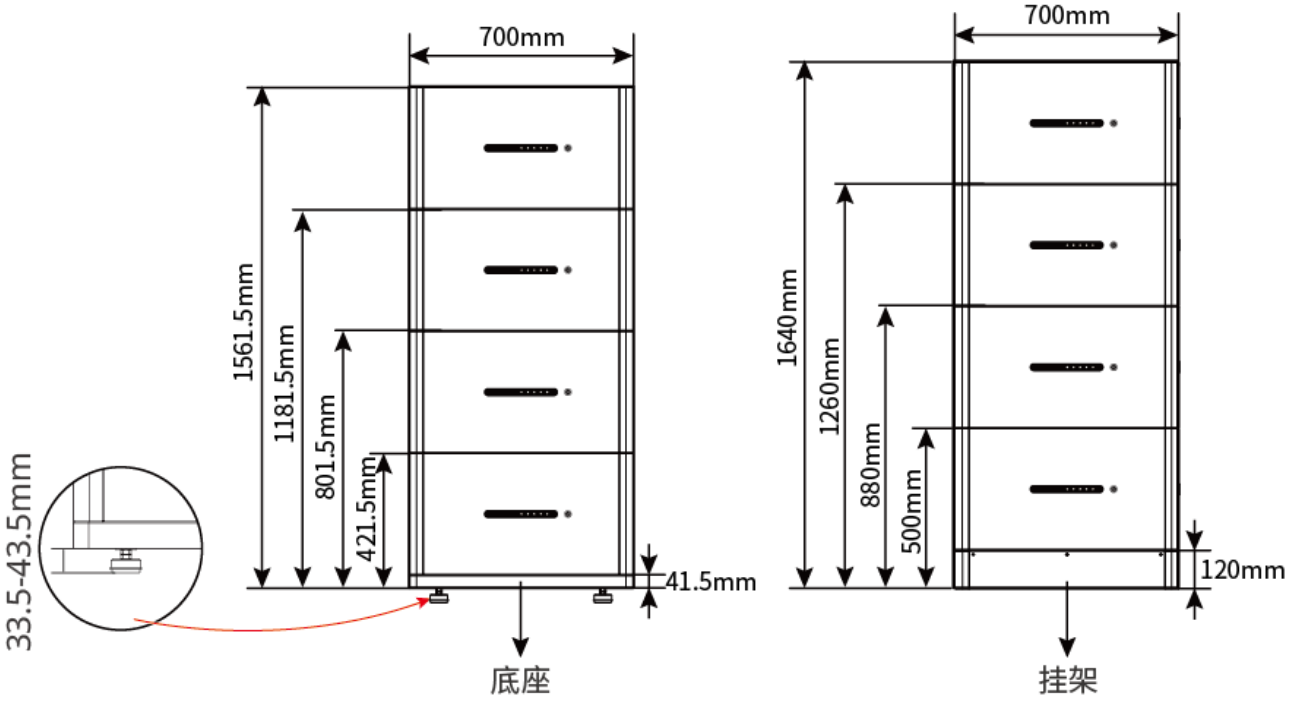

2.2.2.4 Lynx D G2

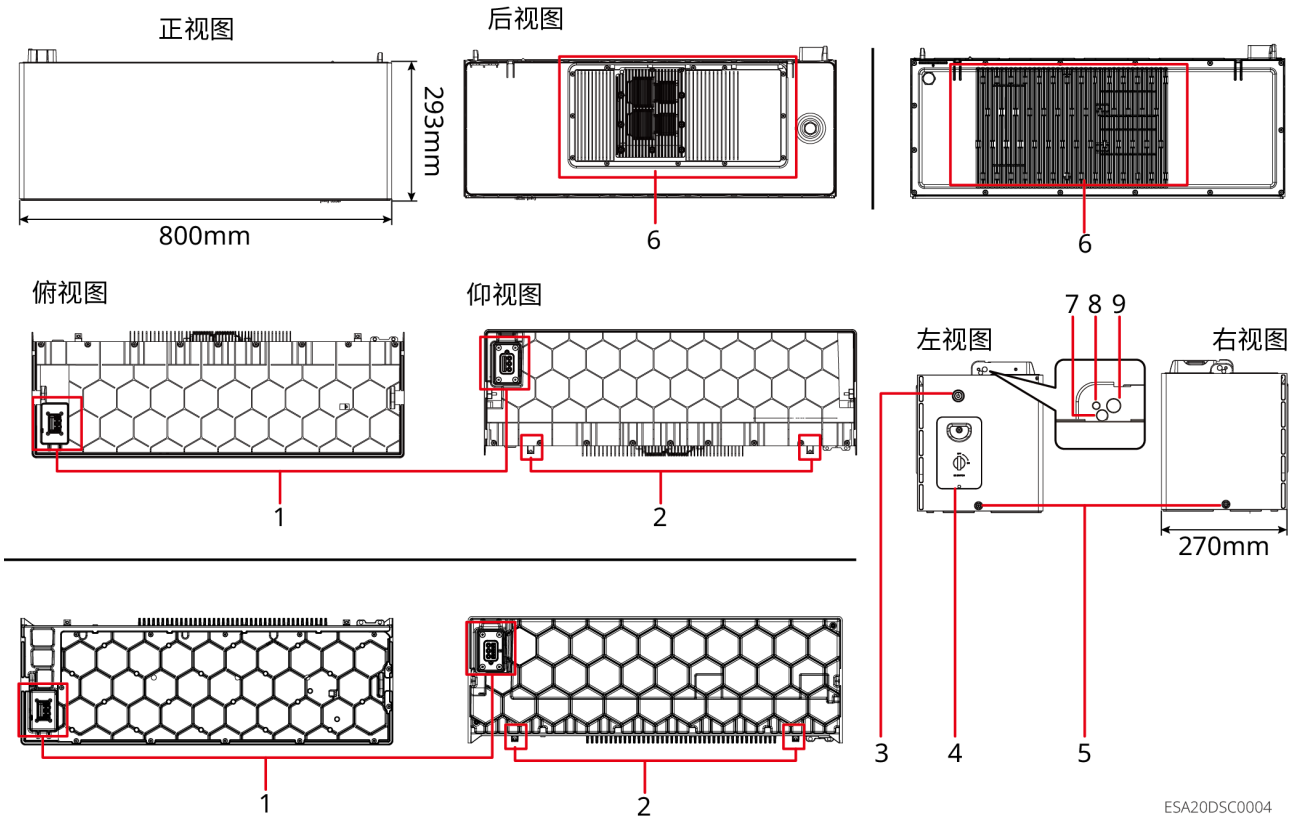

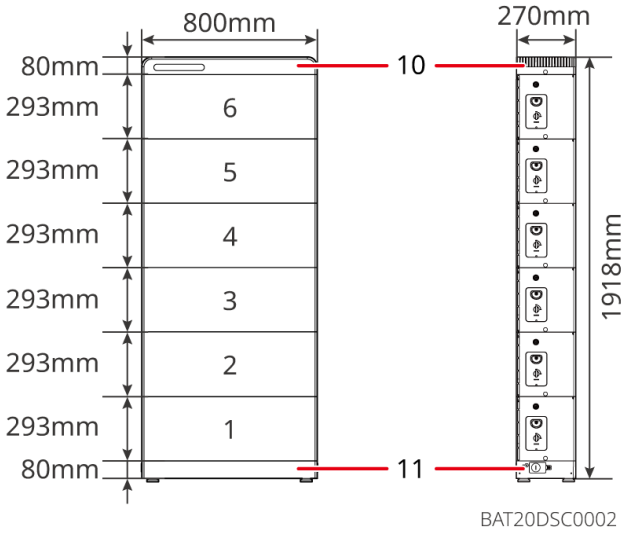

No.	Component	Description
1	connector	Power and communication ports for battery-to-battery and battery-to-inverter connections.
2	Anti-tip bracket fixing holes	Used to secure the battery to the wall.
3	Multi-function button indicator	• Indicates battery operating status. • Battery black start function: When the PV system generates no PV power and the grid is abnormal, the inverter cannot operate normally. In this case, long-press the multi-function button for 2 s to start the battery system, activate the inverter, make the inverter enter off-grid mode, and the battery discharges to supply power to loads. • Battery power-off function: Long-press the multi-function button for >5 s to power off the battery system.
4	Battery isolation switch	Battery power input/output switch.
5	Inter-battery fixing hole	Used to secure two batteries together.
6	Heat sink	Battery heat dissipation

No.	Component	Description
7	Battery lifting holes	Used for lifting the battery. When more than three batteries are stacked, a lifting tool must be used for lifting and installation.
8	Battery or inverter fixing holes	Used for fixing between batteries or between the inverter and battery.
9	Lifting handle mounting holes	Used to install the lifting handle. Used when manually carrying the battery.
10	Battery decorative cover	-
11	Base	-

The energy storage system supports battery capacity expansion. The total battery capacity is determined by the number and specifications of battery modules. The limits specified in this chapter must be strictly observed during configuration. System overall configuration description:

A：GW5.1-BAT-D-G20，GW5.1-BAT-D-G21，GW6.0-BAT-D-G20

B：GW8.3-BAT-D-G20，GW8.3-BAT-D-G21，GW9.0-BAT-D-G20

Mounting Method	Number of expansion groups	Single-group stacking	Total number of batteries
Floor-standing installation	≤3groups	≤6batteries	≤12batteries
Wall-mounted installation （**A**）	≤3groups	≤3batteries	≤9batteries
Wall-mountedinstallation (**A/B/A+B**)	≤3groups	≤2batteries	≤6batteries
Note: Number of expansion groups × stack quantity per group ≤ total number of batteries in the system			

2.2.3 Smart Meter

The smart meter can measure grid voltage, current, power, frequency, energy, and other parameters, and transmit the information to the inverter to control the input and output power of the energy storage system.

GM3000&CT

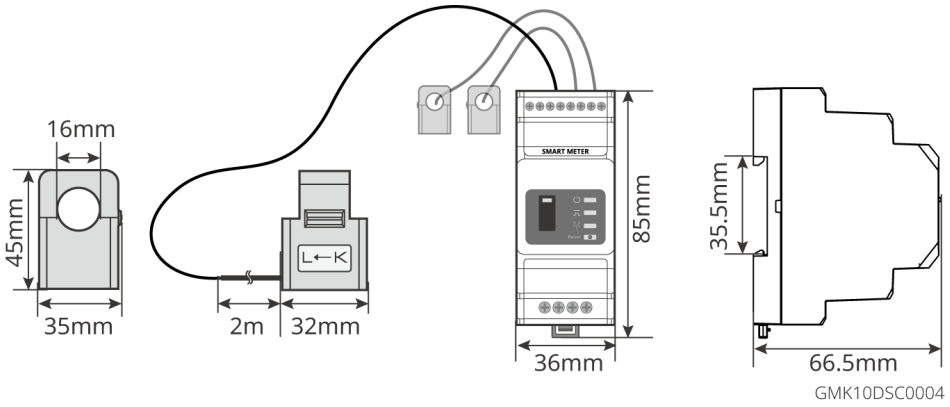

GM330&GMK330&CT

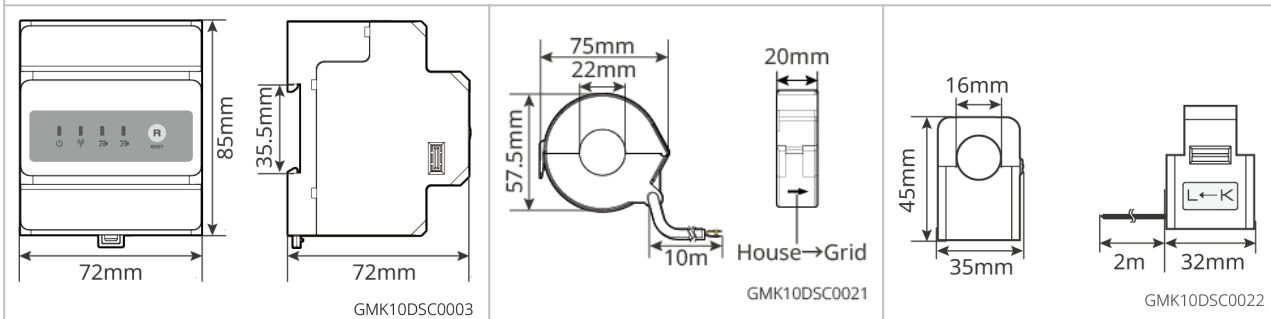

No.	Model	Application scenarios
1	GM3000	CT Not replaceable,CT Ratio:120A: 40mA
2	GM330	CT Can be purchased from GoodWe or sourced independently,CT Ratio requirement:nA: 5A • nA: CT primary-side input current,n is in the range of 200-5000 • 5A: CT secondary-side output current

No.	Model	Application scenarios
3	GMK330	CT is shipped with the meter,CT Ratio: • 120A: 40mA • 200A: 50mA(Brazil only)

2.2.4 Smart Communication Stick

The Smart Communication Stick is mainly used to transmit various inverter power generation data in real time toSEMS Portalremote monitoring platform, and to connect to the Smart Communication Stick viaSolarGo APPfor local device commissioning.

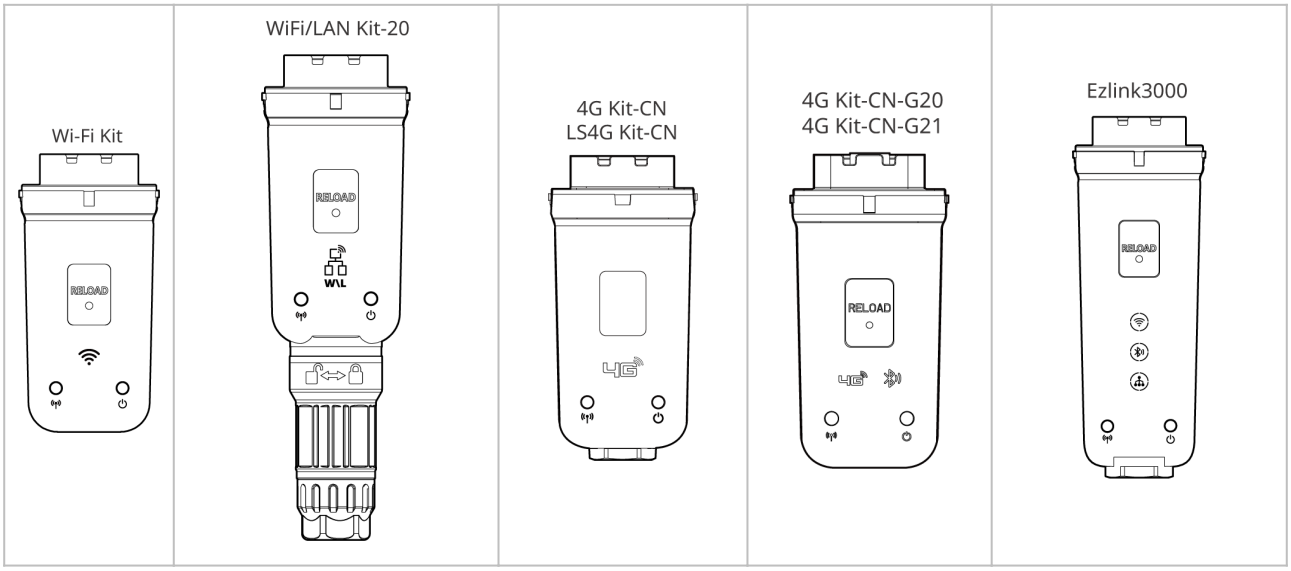

No.	Model	Signal type	Application scenarios
1	Wi-Fi Kit	WiFi	Single-inverter scenario
2	WiFi/LAN Kit-20	WiFi、LAN, Bluetooth	
3	LS4G Kit-CN 4G Kit-CN	4G	
4	4G Kit-CN-G20	4G, Bluetooth	
	4G Kit-CN-G21	4G, Bluetooth,CNSS	

No.	Model	Signal type	Application scenarios
5	Ezlink3000	WiFi、LAN, Bluetooth	Master unit in a multi-inverter scenario

2.3 Supported Grid Types

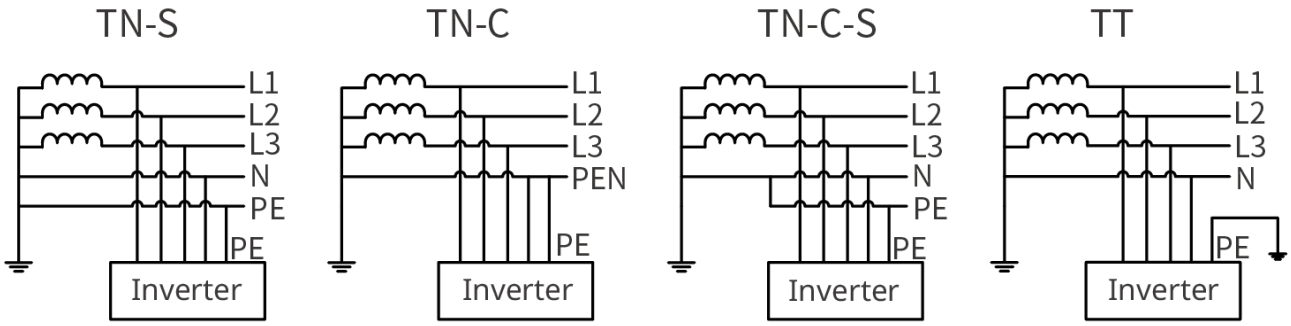

TNNET0003

2.4 System Mode

NOTICE

After First-time Installation of the GW14.3-BAT-LV-G10, GW16.1-BAT-LV-G10, GW5.0-BAT-LVI-G10, and GW10.0-BAT-LV-G10 battery systems, a full battery charge will be automatically performed once; after completion, the system will switch to the configured operating mode.

Self-consumption mode

- Basic mode of system operation.
- PV generation preferentially supplies the load; surplus energy charges the battery, and any remaining energy is exported to the grid. When PV generation cannot meet the load demand, the battery supplies power to the load; when battery power also cannot meet the load demand, the grid supplies power to the load.

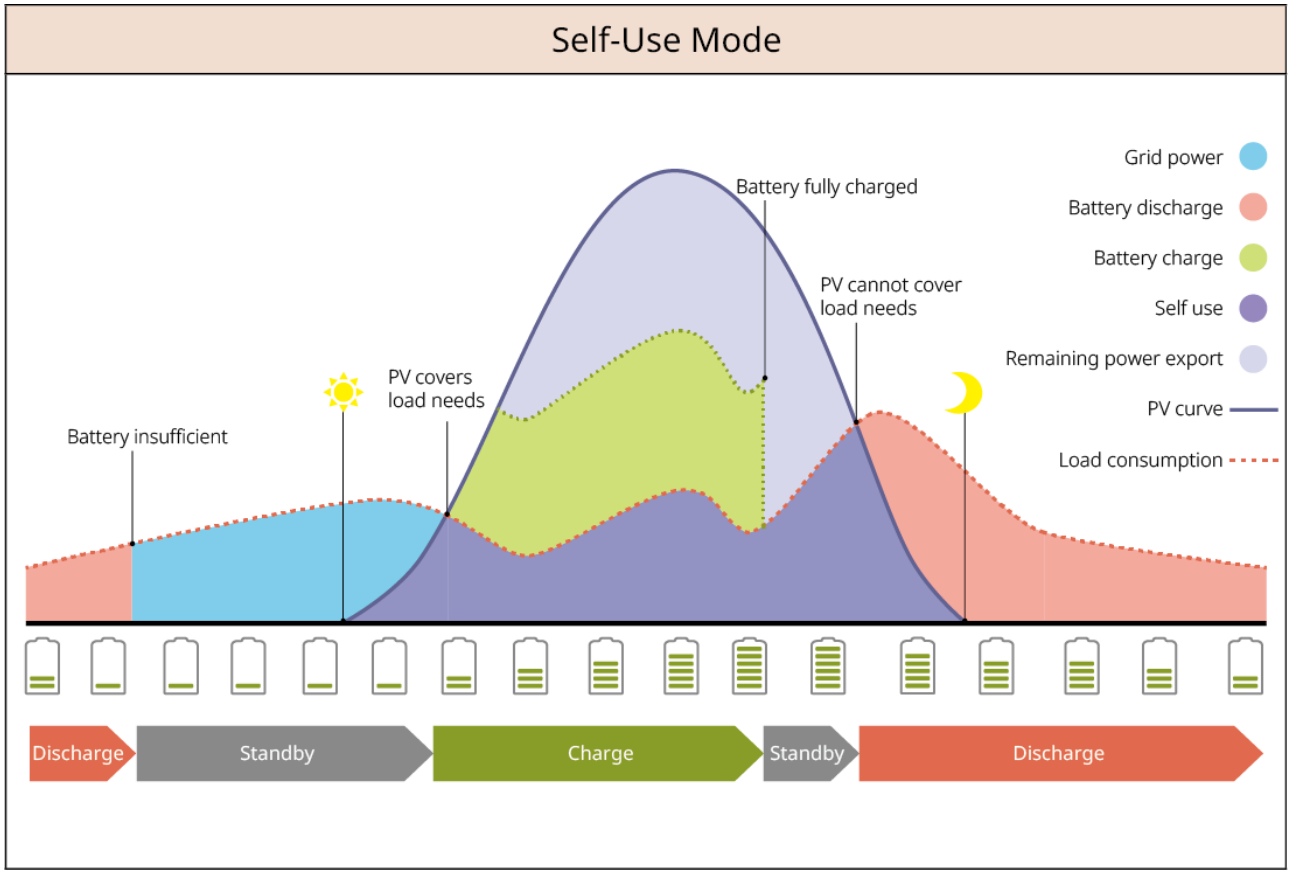

SLG00NET0009

Backup Mode

- Recommended for areas with an unstable grid.
- During a Grid Power Outage, the inverter switches to off-grid operating mode, and the battery discharges to supply the load, ensuring uninterrupted power to the BACK-UP load; when the grid recovers, the inverter operating mode switches to grid-connected operation.
- To ensure that the battery SOC is sufficient to maintain normal system operation when off-grid, the battery will be charged to the backup power SOC using PV or grid-purchased electricity during grid-connected operation. If the battery is to be charged by purchasing electricity from the grid, confirm that local grid laws and regulations are met.

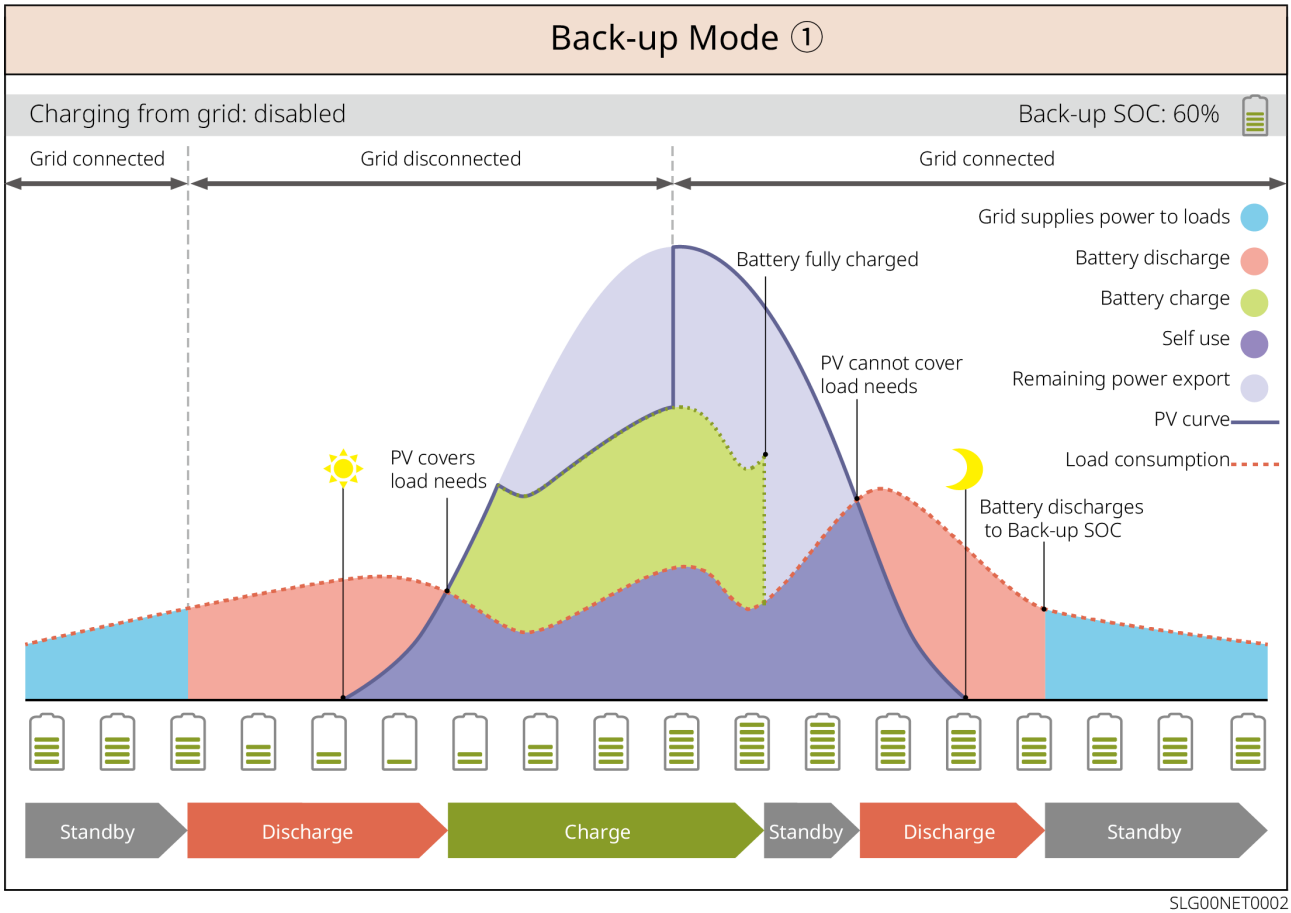

SLG00NET0002

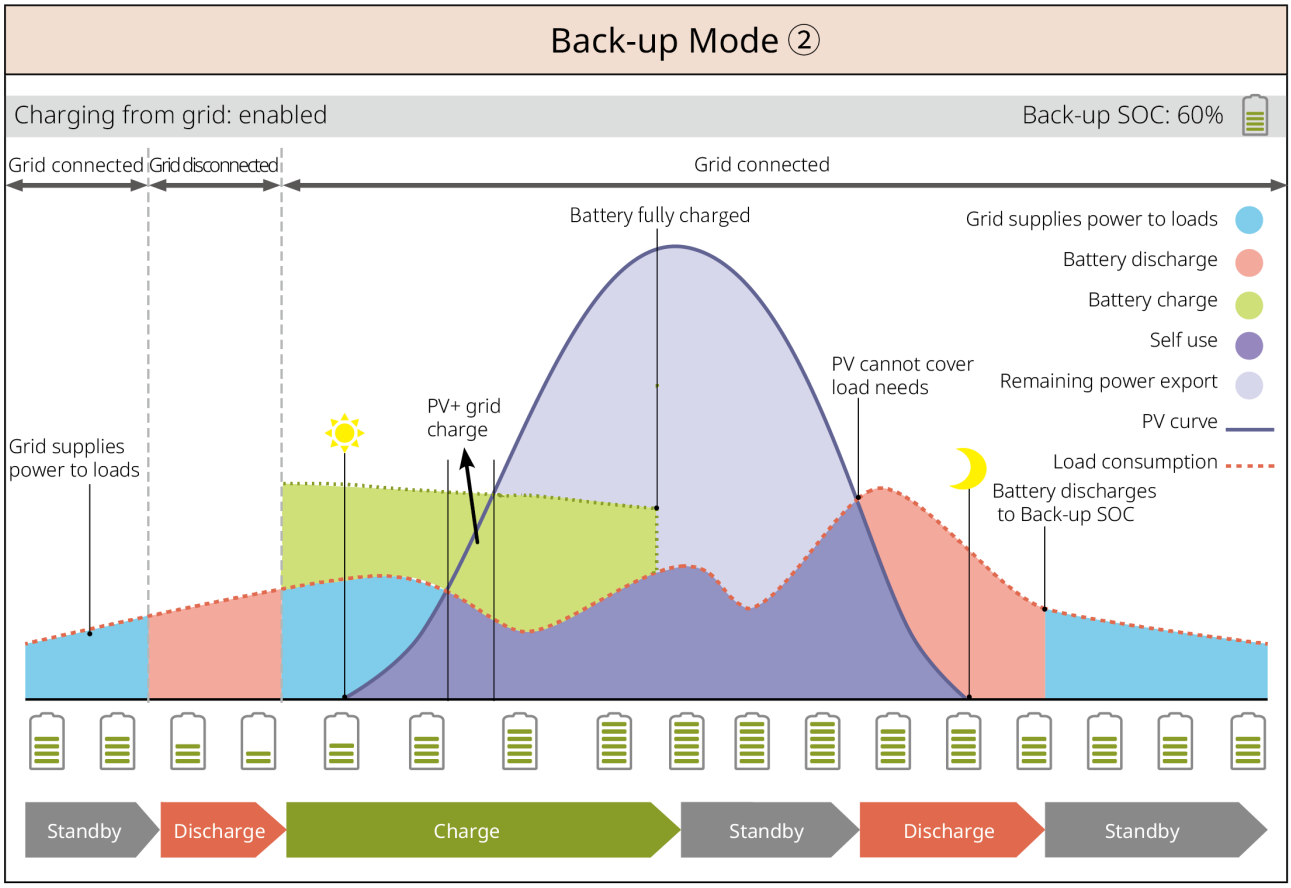

SLG00NET0003

TOU mode

Where local laws and regulations are met, set different time periods for energy purchase and Export Energy based on grid peak-valley Tariff differences.

For example: during the valley Tariff period, set the battery to charging mode and charge it by purchasing electricity from the grid; during the peak Tariff period, set the battery to discharging mode and supply the load from the battery.

TOU Mode ①

PV: Charge battery in priority

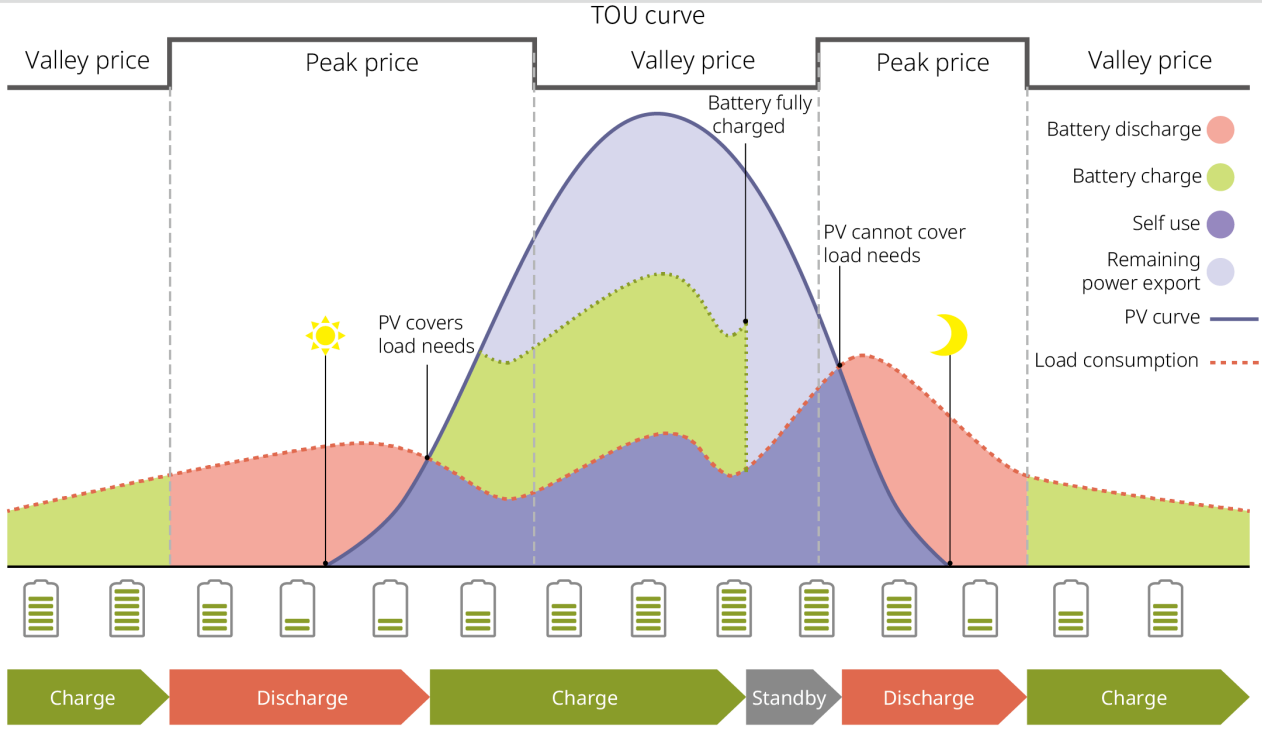

SLG00NET0004

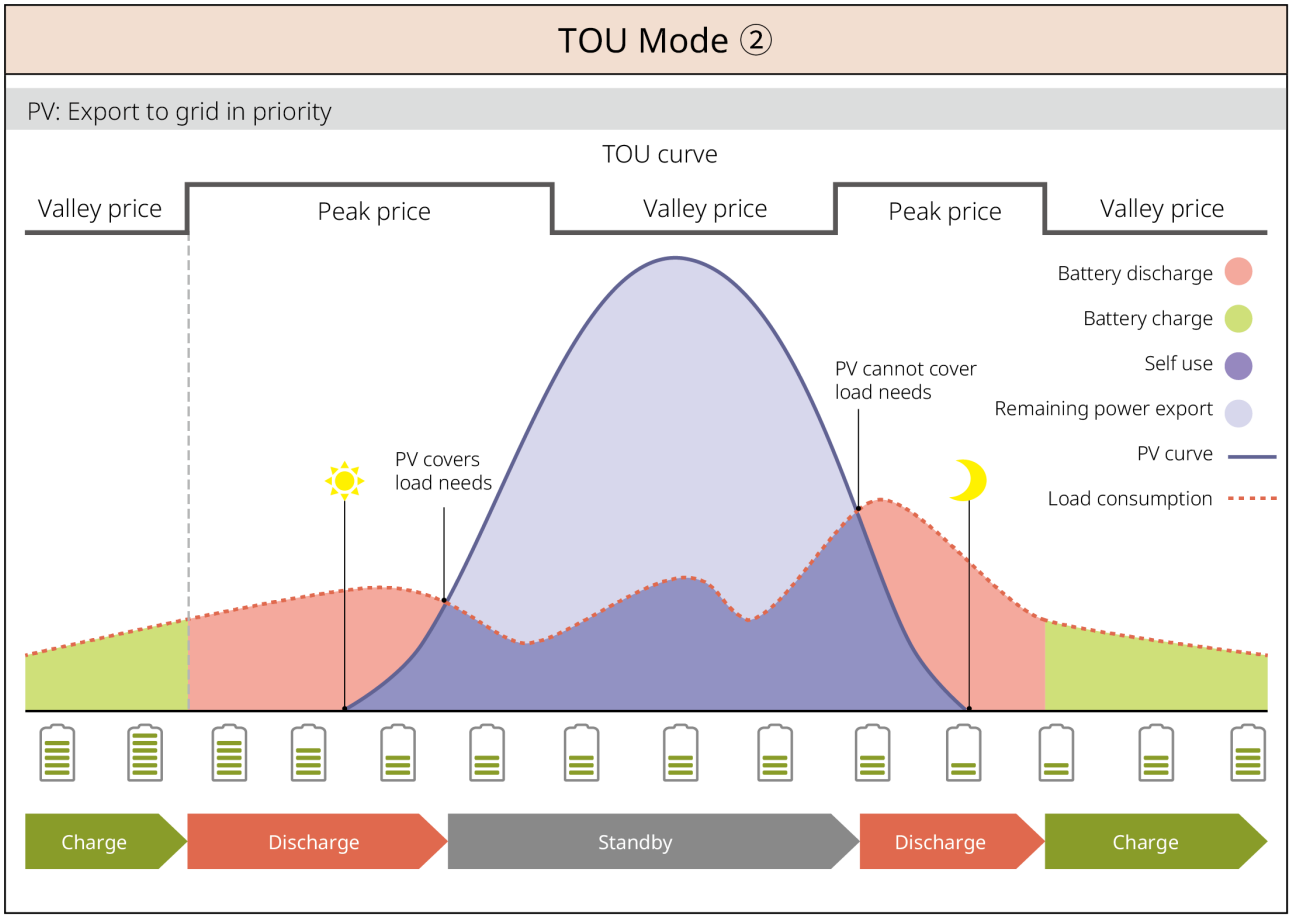

SLG00NET0005

Intelligent charging (delayed charging) mode

- Applicable to areas with grid-connected power export limits.
- Setting a peak power limit allows PV generation exceeding the grid-connection limit to be used to charge the battery; alternatively, set a PV charging period and use PV generation to charge the battery during that period.

Delayed Charging ①

PV > Peak Limit | Switch to Charge: enabled/disabled

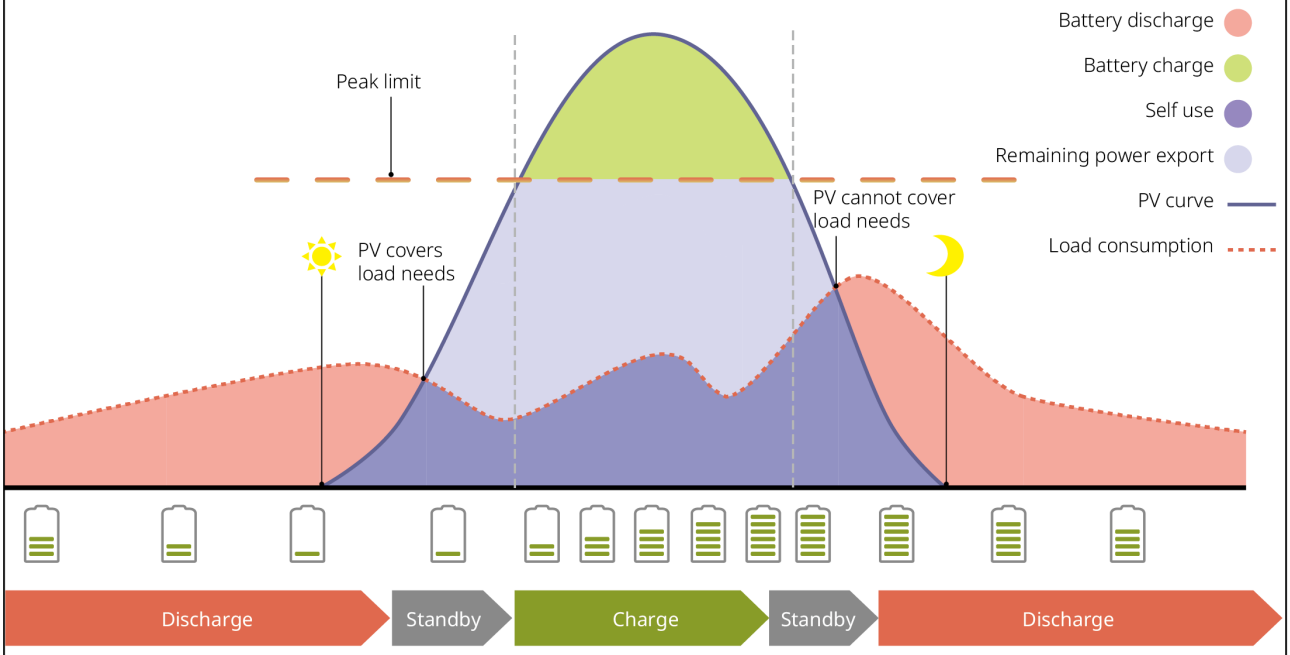

SLG00NET0006

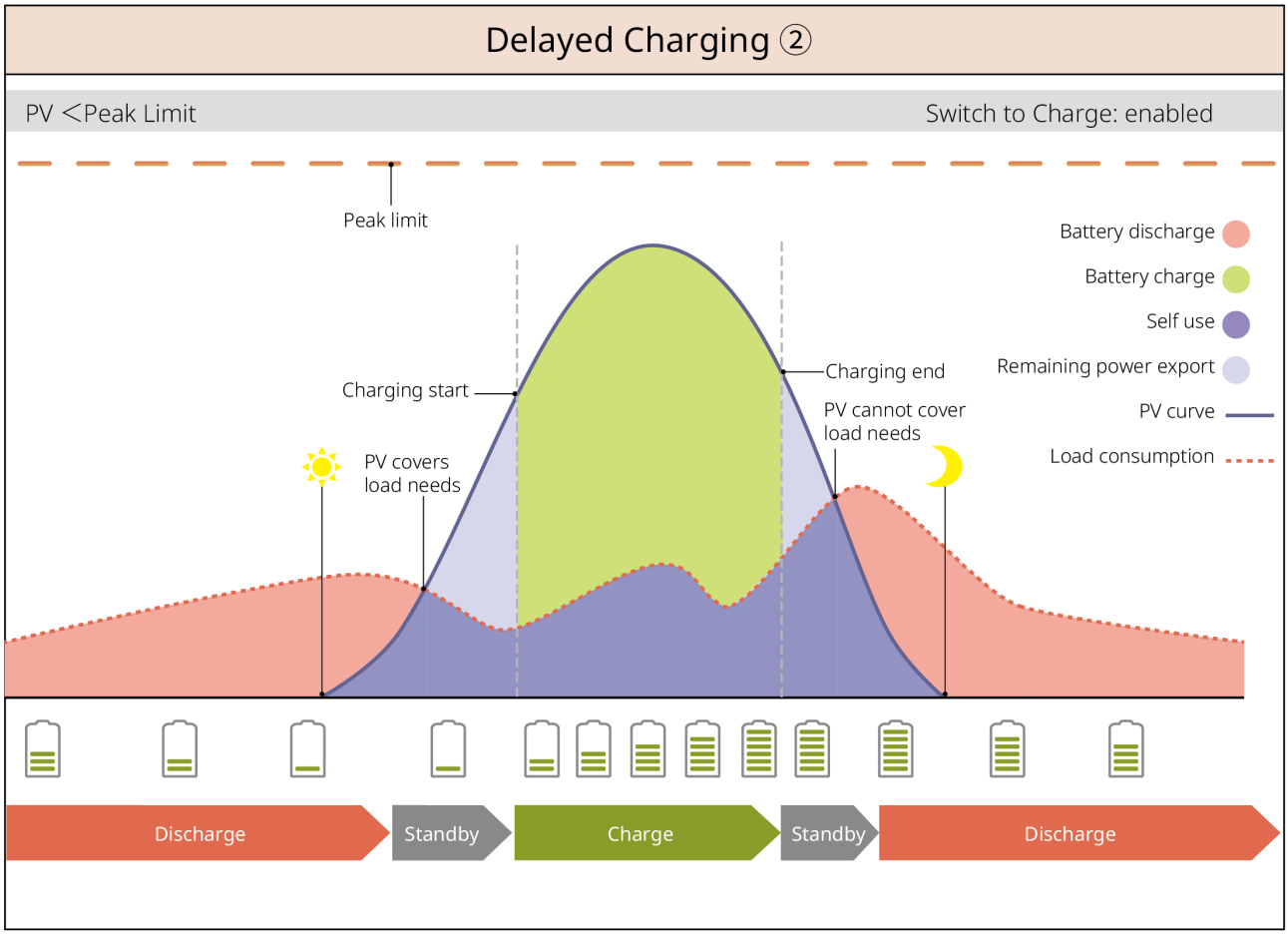

SLG00NET0007

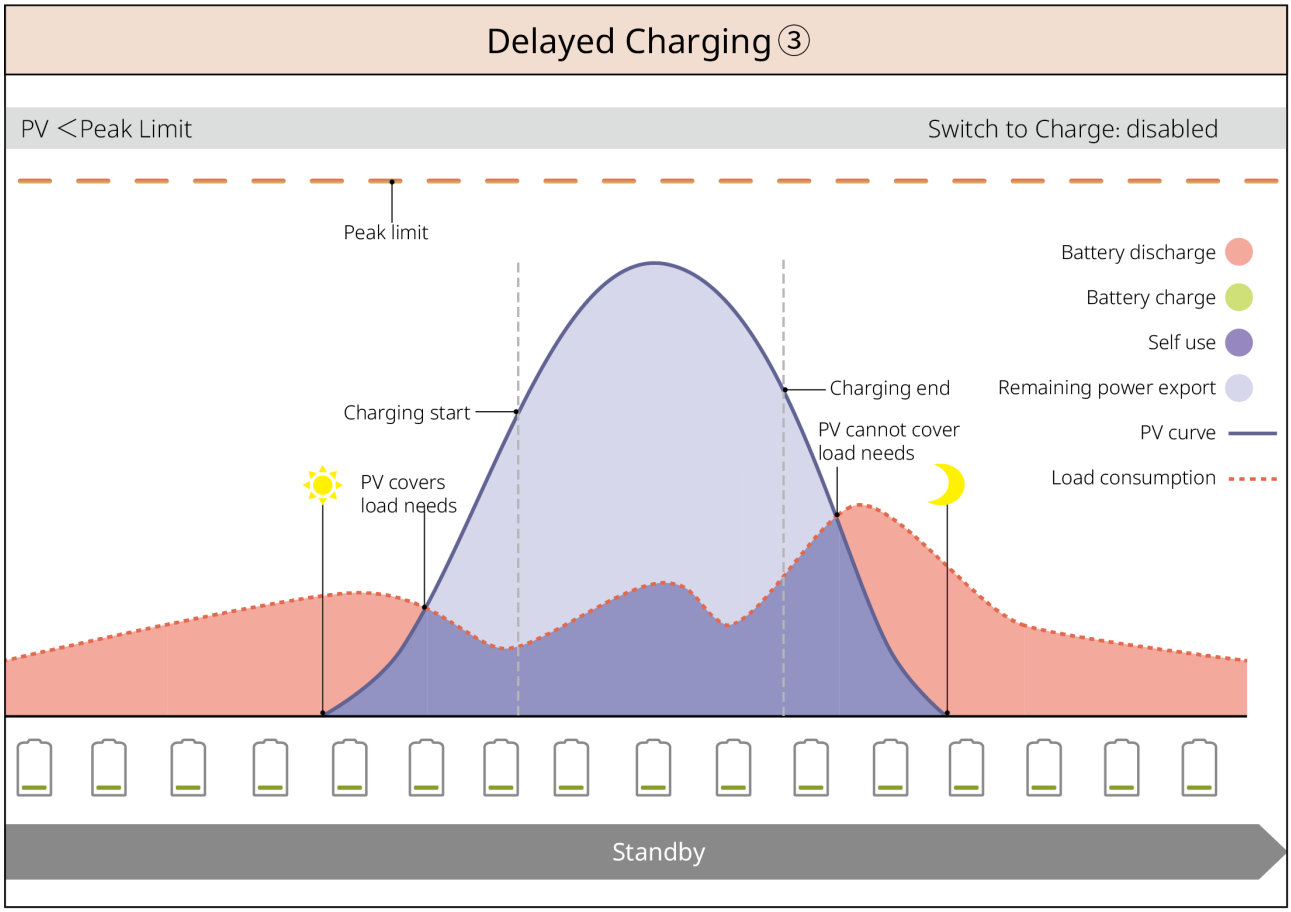

SLG00NET0008

Demand Control Mode

- Mainly applicable to commercial and industrial scenarios.
- When the total load power exceeds the power quota within a short period, battery discharge can be used to reduce the electricity consumption exceeding the quota.
- When both battery channels of the inverter have anSOCbelow the reservedSOCfor demand control, the system purchases electricity from the grid according to the time period, load consumption, and peak import limit; when only one battery channel of the inverter has anSOCbelow the reservedSOCfor demand control, the system purchases electricity from the grid according to load consumption and the peak import limit.

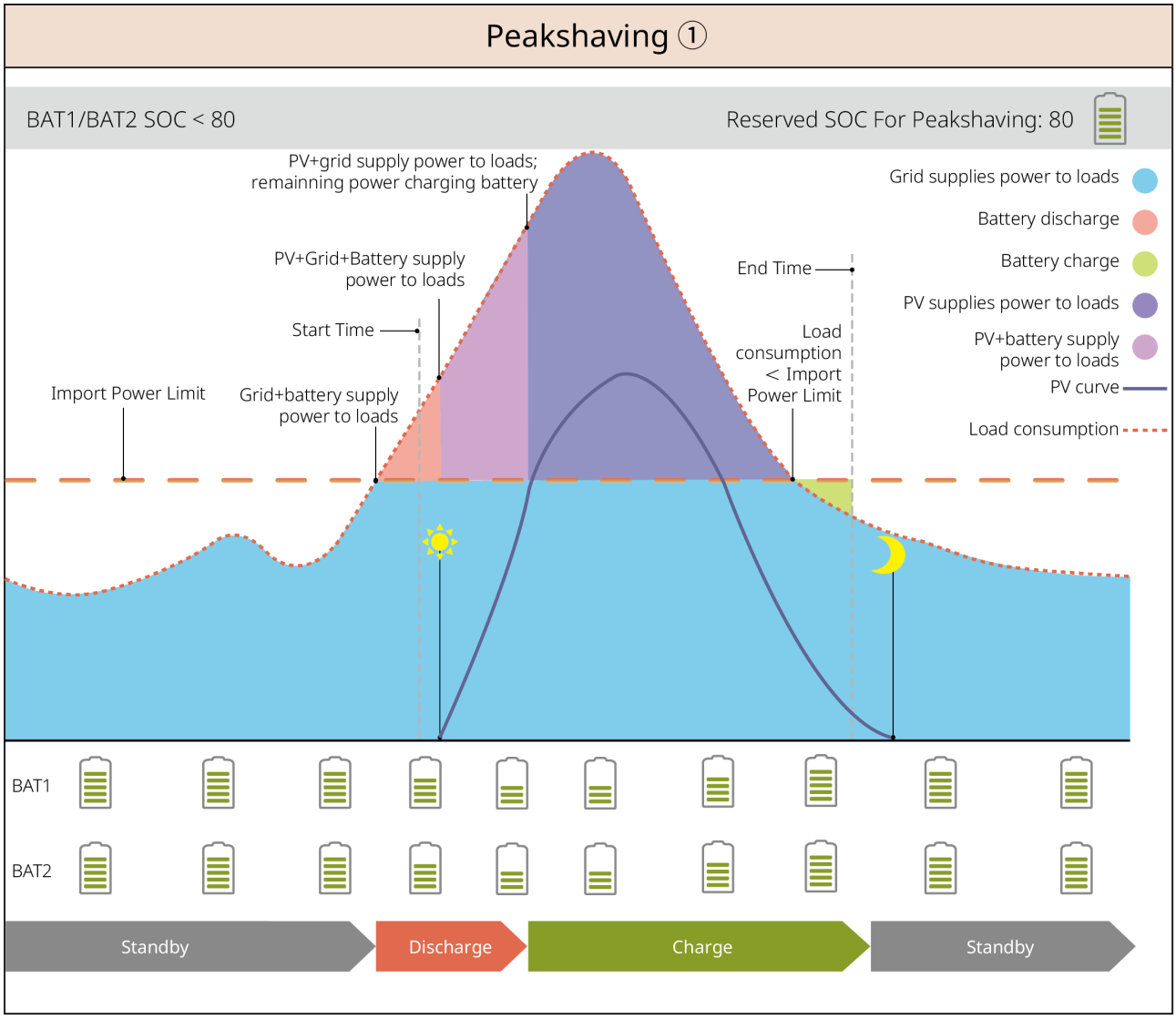

SLG00NET0010

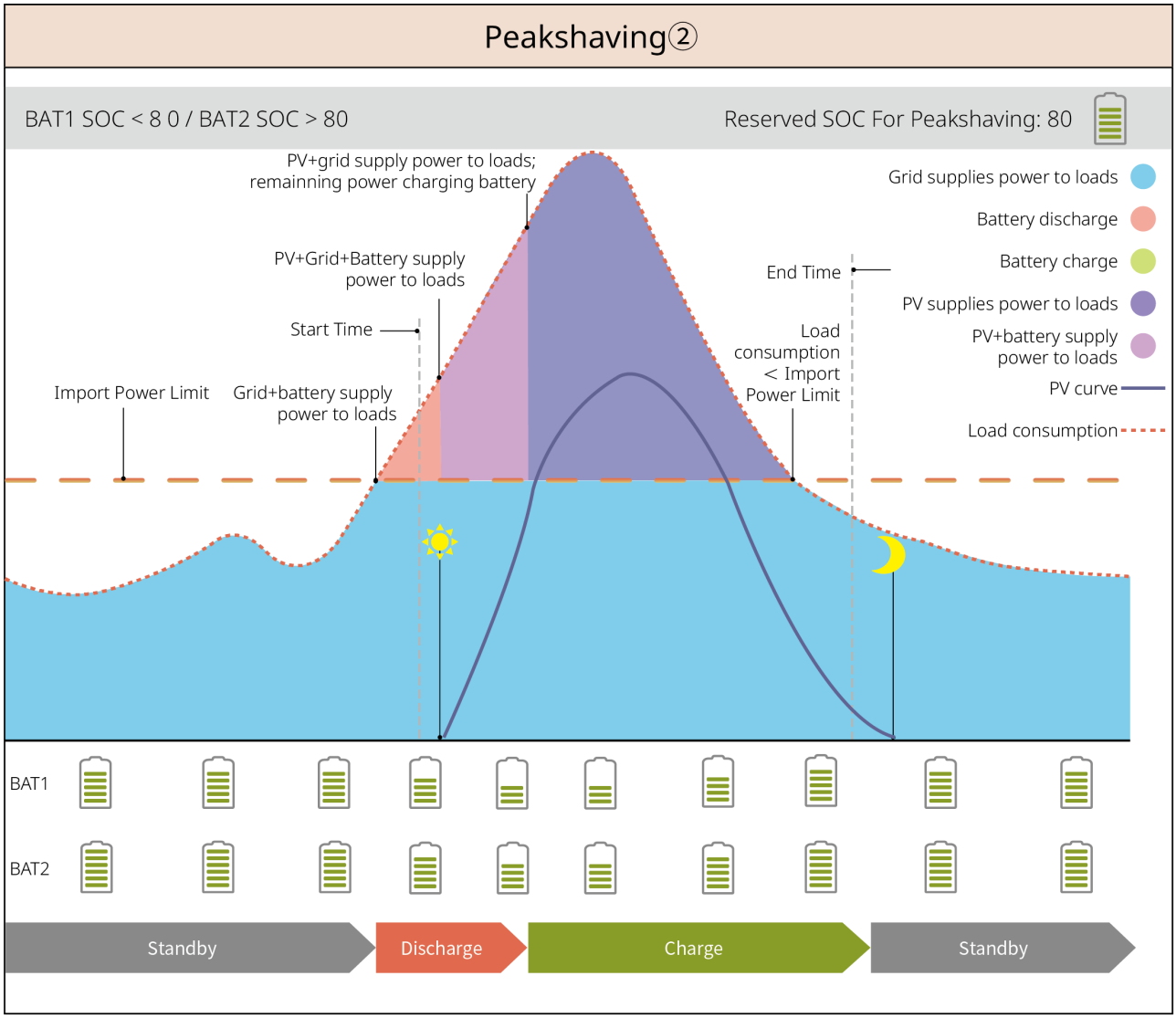

SLG00NET0011

Off-grid mode

NOTICE

When the inverter is Not Connected to a battery system, do not run pure off-grid mode.

When a Grid Power Outage occurs, the inverter switches to off-grid operating mode.

- During the day, PV generation preferentially supplies the load, and surplus power charges the battery.
- At night, the battery discharges to supply the load, ensuring the BACK-UP load remains powered.
- Off-grid SOC recovery: After the system operates off-grid, the battery gradually

recovers through PV generation or other generation methods to the minimum SOC.

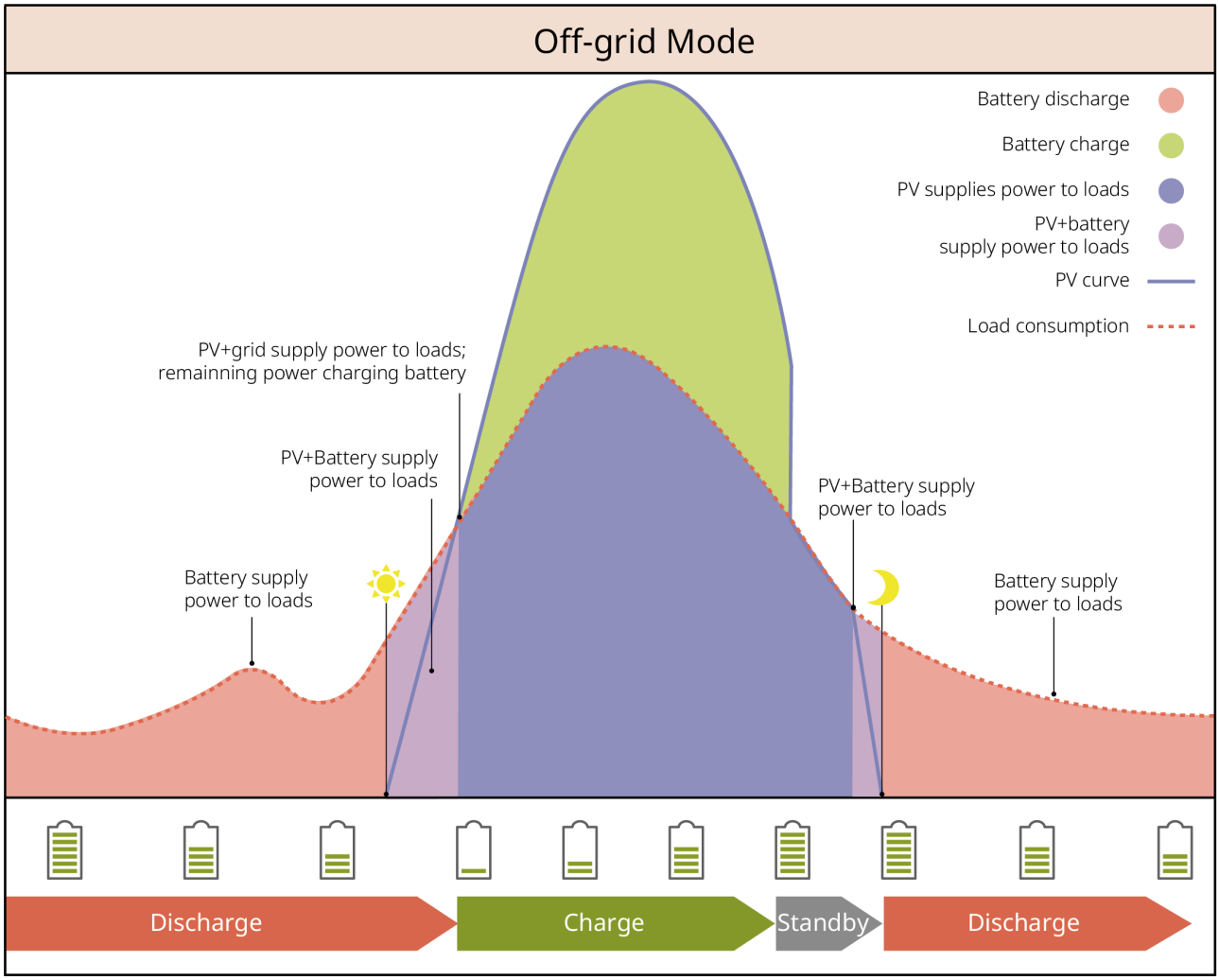

SLG00NET0012

2.5 Functional Features

NOTICE
For specific functional features, refer to the actual product configuration.

AFCI

The inverter integrates an AFCI circuit Protection device for detecting Arc Fault (arc fauIt) and quickly cutting off the circuit upon detection, thereby preventing electrical fires.

Causes of arcing:

- Connector connections in the PV system are damaged.
- Incorrect or damaged cable connections.
- Aging of connectors and cables.

Arc Detection method

- The inverter integratesAFCIfunction, meeting IEC 63027standard.
- When the inverter detects an arc, it can display the fault occurrence time and fault phenomenon through theApp.
- Inverter TriggeredAFCIAfter an alarm is triggered, the inverter shuts down for Protection; after the alarm is cleared, the inverter automatically reconnects to the grid.
  - Automatic reconnection: If the inverter24hours triggersAFCIalarms <5times, the alarm can be automatically cleared after five minutes, and the inverter reconnects to the grid.

Manual reconnection: If the inverter24hours triggers the5 thAFCIalarm, the inverter can reconnect to the grid only after the alarm is manually cleared.

Model	Label	Description
GW12KL-ET	F-I-AFPE-1-2/2-2	F: Full coverage I: Integrated AFPE: Detection and interruption capability provided 1: 1 monitored string per input port 2/2: 2/2 input ports per channel 2: 2 monitored channels
GW15K-ET		
GW20K-ET		
GW18KL-ET	F-I-AFPE-1-2/4-2	F: Full coverage I: Integrated AFPE: Detection and interruption capability provided 1: 1 monitored string per input port 2/4: 2/4 input ports per channel 2: 2 monitored channels
GW25K-ET		
GW29.9K-ET		
GW30K-ET		

Three-phase unbalanced output

The inverter grid-connected terminal andBACK-UPterminal both support three-phase

unbalanced output; each phase can be connected to loads of different power. The maximum output power per phase for different models is shown in the following table:

No.	Model	Maximum output power per phase
1	GW12KL-ET	4kW
2	GW18KL-ET	6kW
3	GW15K-ET	5kW
4	GW20K-ET	6.7kW
5	GW25K-ET	8.3kW
6	GW29.9K-ET	10kW
7	GW30K-ET	10kW

Load control

The inverter dry contact control port supports connection of an additional contactor to control load on/off. It supports household loads, heat pumps, etc.
Load control methods are as follows:

- Time control: Set the time to turn the load on or off; the load will automatically turn on or off within the set time period.
- Switch control: When the control mode is set to ON, the load will be turned on; when set to OFF, the load will be turned off.
- BACK-UP load control: The inverter has a built-in relay dry contact control port, through which the relay can control whether the load is turned off. In off-grid mode, if BACK-UP terminal Overload is detected or the battery SOC is lower than the battery off-grid Protection setting, the load connected to the relay port can be turned off.

Rapid Shutdown (RSD)

In a Rapid Shutdown system, the Rapid Shutdown transmitter and receiver work together to achieve Rapid Shutdown of the system. The receiver maintains module output by receiving signals from the transmitter. The transmitter can be external or built into the inverter. In an emergency, an external trigger device can be enabled to stop the transmitter, thereby shutting down the modules.

- When the inverter cannot be connected to an external synchronization signal and

multiple inverters need to be paralleled, ensure that the PV cables of different inverters are routed in independent cable trays, and maintain at least 20 cm spacing between the cable trays.

- When the inverter can be connected to an external synchronization signal, ensure that a maximum of 5 transmitters are connected in the same synchronization group.

- External Transmitter
  - Transmitter model: GTP-F2L-20, GTP-F2M-20
    https://www.goodwe.com/Ftp/Installation-instructions/RSD2.0-transmitter.pdf
  - Receiver model: GR-B1F-20, GR-B2F-20
    https://en.goodwe.com/Ftp/EN/Downloads/User%20Manual/GW_RSD-20_Quick-Installation-Guide-POLY.pdf
- Built-in Transmitter
  - External trigger device: external switch
  - Receiver model: GR-B1F-20, GR-B2F-20
    https://en.goodwe.com/Ftp/EN/Downloads/User%20Manual/GW_RSD-20_Quick-Installation-Guide-POLY.pdf

3 Device Inspection and Storage

3.1 Device Inspection

Before signing for receipt of the product, carefully check the following:

1. Check whether the outer packaging is damaged, such as deformation, holes, cracks, or other signs that may cause damage to the equipment inside the packaging box. If there is damage, do not open the packaging and contact your dealer or after-sales service center.
2. Check whether the equipment model is correct. If it does not match, do not open the packaging and contact your dealer or after-sales service center.
3. Check whether the type and quantity of the delivered items are correct and whether the appearance is damaged. If there is damage, please contact your dealer or after-sales service center.

3.2 Delivered Items

⚠WARNING

Check whether the type and quantity of the delivered items are correct and whether the appearance is damaged. If there is damage, please contact your dealer.
After removing the delivered items from the packaging, do not place them on rough, uneven, or sharp surfaces to prevent paint damage.

3.2.1 Inverter Delivered Items

Component	Description	Component	Description
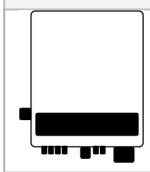	Inverter x 1	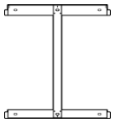	Backplate x 1

Component	Description	Component	Description
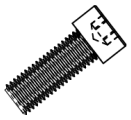	Back mounting fastening screw x 2	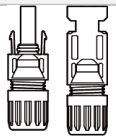 or 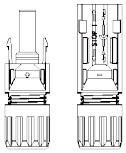	PVconnector GW12KL-ET、GW15K-ET、GW20K-ET：4 GW18KL-ET、GW25K-ET、GW29.9K-ET、GW30K-ET：6
 or 	PVwiring tool x 1	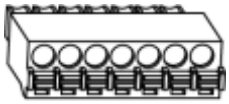	7PINcommunication terminal x 1
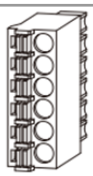	6PINcommunication terminal x 1	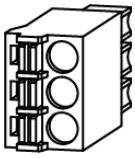	3PINcommunication terminal x 1
	Protection grounding screw x 1		Tubular terminal x N The tubular terminals delivered with the inverter vary depending on the inverter configuration. Please refer to the actual items.
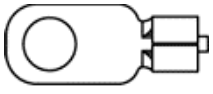	Protection grounding terminal x 1	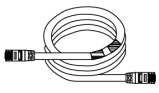	BMS/Metercommunication cable GW12KL-ET、GW15K-ET、GW20K-ET：2 GW18KL-ET、GW25K-ET、GW29.9K-ET、GW30K-ET：3

Component	Description	Component	Description
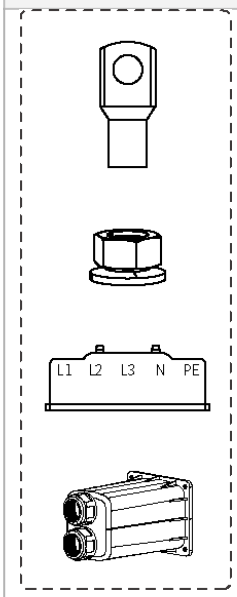 or 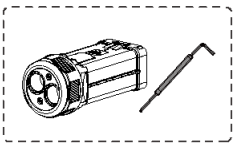 or 	Subject to actual delivery • OTterminal x 12 • AC terminal flange nut x 20 • AC terminal insulation plate x 1 • AC terminal Protection cover x 1 • Hex key or T-handle wrenchx 1	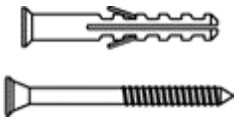	Expansion bolt x 6
		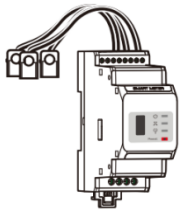 or 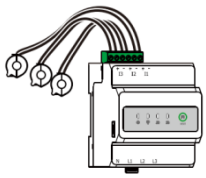	Smart meter and accessories x 1 Subject to actual delivery
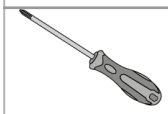	Screwdriver x 1	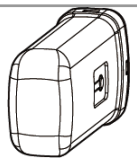 or 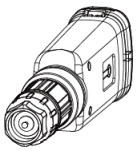	Communication module x 1
	Product documentation x 1		

Component	Description	Component	Description
 wiring tool 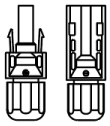 Battery connector	(Optional) wiring tool x 1 Battery connector: GW12KL-ET、GW15K-ET、GW20K-ET：1 GW18KL-ET、GW25K-ET、GW29.9K-ET、GW30K-ET：2		
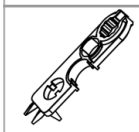 wiring tool  Hex screwdriver 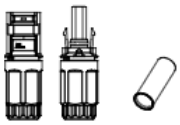 Battery connector	(Optional) wiring tool x 2 Hex screwdriverx 1 Battery connector: GW12KL-ET、GW15K-ET、GW20K-ET：1 GW18KL-ET、GW25K-ET、GW29.9K-ET、GW30K-ET：2		

Component	Description	Component	Description
	Cable tie x 10	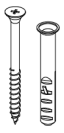	Expansion bolt x 4
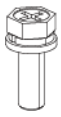	M5 hex screw x 10		M5 nut x 5
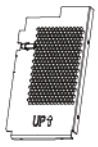	Protection cover right side panel x 1	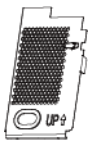	Protection cover left side panel x 1

Component	Description	Component	Description
	Protection cover bottom plate x 1		Protection cover front cover plate x 1

Table38 **Protection cover accessories (Australia only)**

3.2.2 Battery Delivery Items

3.2.2.1 Lynx Home F 、Lynx Home F Plus+

- Control box package

<table>
<tr><th>Component</th><th>Quantity</th><th>Component</th><th>Quantity</th></tr>
<tr><td>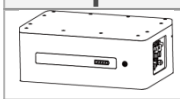</td><td>Main control box x 1</td><td>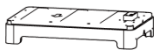</td><td>Base x 1</td></tr>
<tr><td>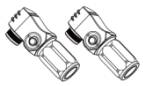</td><td>DC Connector
• Lynx Home F x1
• Lynx Home F Plus+ x 2</td><td>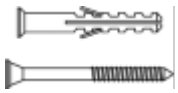</td><td>expansion bolts x 4</td></tr>
<tr><td>Adjustable leveling feet
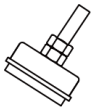</td><td colspan="3" rowspan="3">• Adjustable leveling feet are only provided with theLynx home F Plus+series.
• Select adjustable feet, supplied quantity:
◦ Adjustable leveling feet:4pcs
◦ Anti-tip bracket for leveling feet:2pcs
◦ Standard anti-tip bracket:2pcs
• No adjustable feet selected, quantity supplied:
◦ Standard anti-tip bracket:4pcs</td></tr>
<tr><td>Base anti-tip bracket
</td></tr>
<tr><td>Standard anti-tip bracket
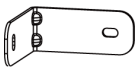</td></tr>
<tr><td>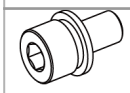</td><td>M5*12screw x 4</td><td></td><td>M5Torx screw x 2</td></tr>
<tr><td></td><td>M6nut x 2</td><td></td><td>Protection grounding terminal x 2</td></tr>
</table>

Component	Quantity	Component	Quantity
	Protective cover x 1	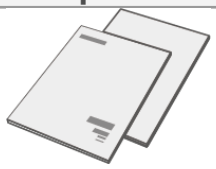	Product documentation x 1
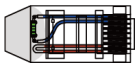	Terminating resistor x 1	-	-

- Battery module package

Component	Quantity
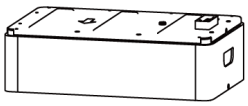	Battery module x 1

3.2.2.2 Lynx Home F G2

- Main control box package

Component	Quantity	Component	Quantity
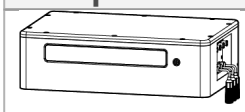	Main control box x 1	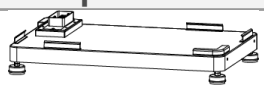	Base x 1
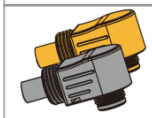	DC Connector Positive:x 2 Negative:x 2	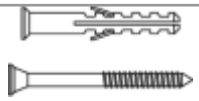	expansion bolts x 8
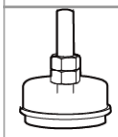	Adjustable leveling feet x 4	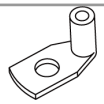	Protection grounding terminal x 2

Component	Quantity	Component	Quantity
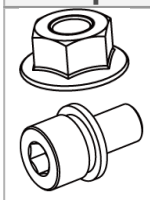	• M5*12 screw x N • M6 nut x N N: Quantity depends on product configuration: • M5*12 screw x 8, M6 nut x 2; • M5*12 screw x 10, M6 nut x 2; • M5*12 screw x 11, M6 nut x 2; • M5*12 screw x 13, M6 nut x 0; • M5*12 screw x 12, M6 nut x 0;		
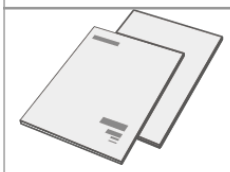	Product documentation x 1	 Protective cover plate	（Optional） Protective cover plate x 1
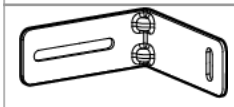	L-shaped bracket x 8	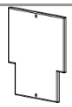 Junction box cover plate 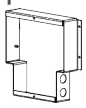 Junction box	（Optional） Junction box x 1， Junction box cover plate x 1，
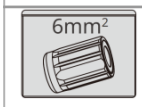	DC Connector waterproofing Plug x 4	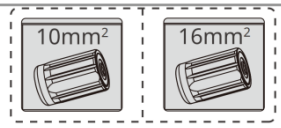	DC Connector waterproofing Plug x 4

• Battery module package

Component	Quantity
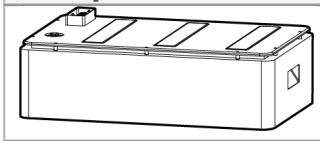	Battery module x 1

3.2.2.3 Battery Delivery Items (Lynx Home D)

NOTICE
The battery system must be installed on a base or wall-mount bracket. Select the base or wall-mount bracket according to the installation conditions; the actual delivered items are subject to the selected configuration.

- Battery

Component	Quantity	Component	Quantity
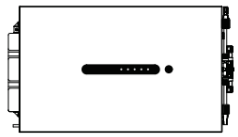	Battery x 1		Battery left-side protective cover x 1
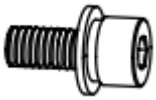	M6screws x 2		Battery right-side protection cover x 1
	M5screws • When the inter-battery fixing bracket is shipped as an accessory,M5screw quantity is4。 • When the inter-battery fixing bracket is shipped pre-installed on the machine;M5screw quantity is2。	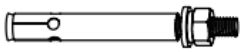	M6expansion bolts x 2

Component	Quantity	Component	Quantity
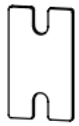	Inter-battery fixing bracket • When the inter-battery fixing bracket is shipped as an accessory, the delivery quantity is2。 • When the inter-battery fixing bracket is shipped pre-installed on the machine, the delivery quantity is0。		Inter-battery communication cable x 1
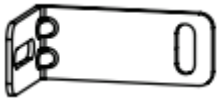	Anti-tip bracket x 2	-	-

• (Optional) Base

Component	Quantity	Component	Quantity
	Base x 1		M5screwsx 2
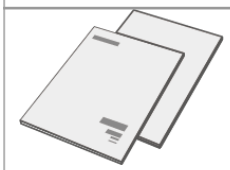	Product documentation x 1	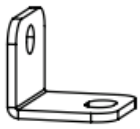	Base and battery fixing bracket x 2

Component	Quantity	Component	Quantity
	Grounding terminalx 1	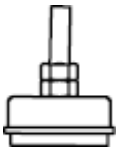	Adjustable feet x N The quantity of adjustable feet is subject to actual delivery. If no adjustable feet are included in the delivered package and they are required, please contact your dealer or after-sales service.
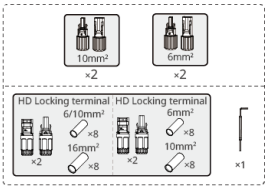	Power connection terminal (Optional) Hex socket screwdriver x 1 The hex socket screwdriver is shipped together with the battery DC terminal that has theHD Locking terminallabel affixed to the self-sealing bag.		Terminating resistor x 1
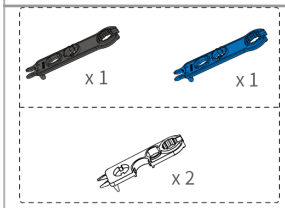	Power connection terminal tightening tool	-	-

Mounting bracket (Optional)

Component	Quantity	Component	Quantity
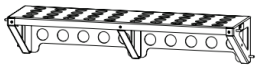	Mounting bracket x 1	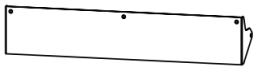	Front protective cover x 1

Component	Quantity	Component	Quantity
	Left protective cover x 1	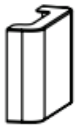	Right protective cover x 1
	Mounting bracket and battery fixing bracket x 2	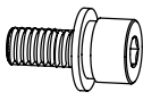	M5screws x 2
	M12expansion bolts x 4	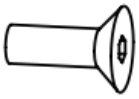	M4screws x 5
	Grounding terminalx 1		Terminating resistor x 1
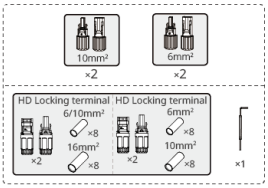	Power connection terminal (Optional) Hex socket screwdriver x 1 The hex socket screwdriver is shipped together with the battery DC terminal that has theHD Locking terminallabel affixed to the self-sealing bag.	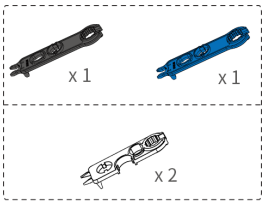	Power connection terminal tightening tool
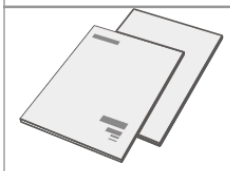	Product documentation x 1	-	-

3.2.2.4 Battery Delivery Items (Lynx D G2)

Component	Description	Component	Description
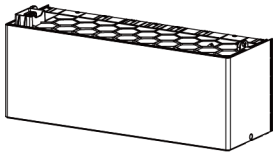	Battery x 1	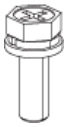	M5*16 screws x 2
	Silicone caps x 2	-	-

3.2.2.4.1 Base Delivery Items

NOTICE
The system supports 5-108 kWh. A maximum of 6 batteries can be stacked in a single column. If there is a higher energy demand, or in other expansion scenarios such as the need to reduce the single-column stacking height due to installation conditions, please contact GoodWe or your dealer to purchase a battery expansion kit.

Component	Description	Component	Description
	Base x 1		Anti-tip bracket x 4
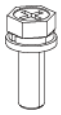	M5 screws x 7	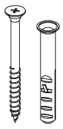	M6 expansion screws x 4
	Adjustable feet x 4		OT grounding terminal x 1
	Termination resistor x 1		Battery decorative cover x 1
	Drilling template x 2		Hex key x 1

Component	Description	Component	Description
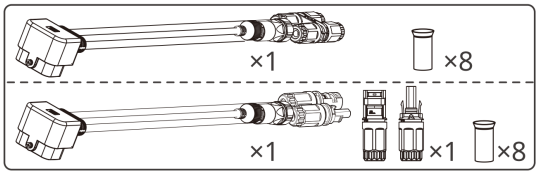			Battery cluster expansion harness x 1
	Unlocking tool x N		3 m battery cluster expansion positive connection harness x 1
	3 m battery cluster expansion negative connection harness x 1		Battery cluster expansion network cable x 1
	Silicone cap x 2		Handle x 2
	Product documentation x 1	-	-

3.2.2.4.2 Battery Mounting Bracket Delivery Items (Optional)

Component	Description	Component	Description
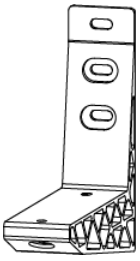	Mounting bracket x 2		M10 expansion bolts x 6
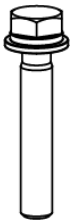	M10 screws x 4	-	-

3.2.2.4.3 Off-Wall Bracket Deliverables (Optional)

Component	Description	Component	Description
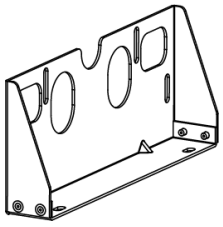	Wall-mounting bracket x 2	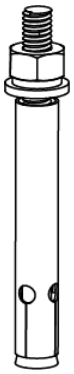	M6 expansion screws x 4
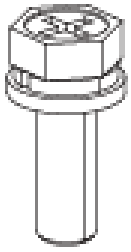	M5 fixing screws x 4	-	-

3.2.3 Smart Meter Deliverables (GM3000)

Component	Quantity	Component	Quantity
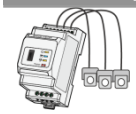	Smart meter andCT x 1	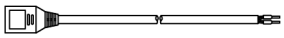	2PINterminal-to-RJ45terminal adapter cable x 1
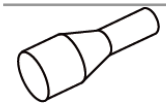	Tubular terminal x 3		USBPlug x 1
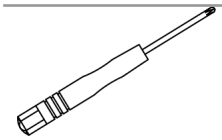	Screwdriver x 1	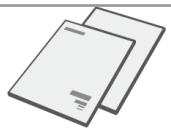	Product documentation x 1

3.2.4 Smart Meter Deliverables GM330&GMK330

3.2.4.1 Accessory List

Component	Description	Component	Description
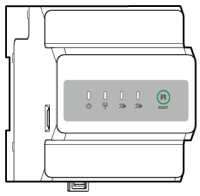	Smart Meter x1 GMK330:CT×3; GMK360: CT×6; GM330: CT x 0。		2-pin communication terminal x1 Applicable to GM330.
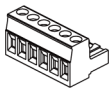	6-pin communication terminal x1 Applicable to GM330.	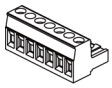	7-pin communication terminal x1 Applicable to GM330.
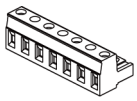	Meter communication terminal Applicable to GMK330/GMK360.		RS485 communication terminal x 1
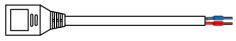	2PINterminal-to-RJ45terminal adapter cable x 1		Screwdriver x1
	Tubular terminal GMK330/GMK360: x 5 ; GM330: x 6。		Product documentation x 1

3.2.5 Smart Communication Dongle Deliverables

LS4G Kit-CN&4G Kit-CN

Component	Description	Component	Description
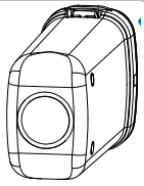	4GCommunication module x1	-	-

WiFi/LAN Kit-20

Component	Description	Component	Description
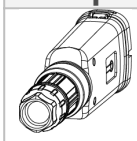	Communication module x1		Product documentation x 1

4G Kit-CN-G20 & 4G Kit-CN-G21

Component	Description	Component	Description
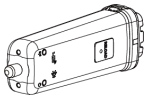	4G Smart Communication Dongle x1		Product Documentation x1

Ezlink3000

Component	Description	Component	Description
	Communication module x1	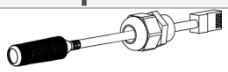	LANCable Connection Port x1
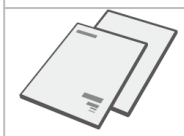	Product documentation x1	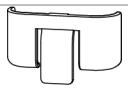	Unlocking Tool x1 Some modules require a tool for removal. If no tool is supplied, they can be unlocked via the button on the module body.

Wi-Fi Kit

Component	Description	Component	Description
	Communication module x1		Unlocking Tool x1 Some modules require a tool for removal. If no tool is supplied, they can be unlocked via the button on the module body.

Component	Description	Component	Description
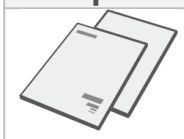	Product documentation x1	-	-

3.3 Equipment Storage

NOTICE

[1] The storage duration starts from the SN date on the battery outer packaging. Once the storage period is exceeded, charge/discharge maintenance is required. (Battery maintenance time = SN date + charge/discharge maintenance interval.) For how to check the SN date, refer to:10.4.SN Code Meaning(Page 319)。

[2] After the charge/discharge maintenance passes, if a Maintaining Label is affixed to the outer box, update the maintenance information on the Maintaining Label. If there is no Maintaining Label, record the maintenance time and battery SOC yourself and keep the data properly to facilitate maintenance record retention.

If the equipment is not put into use immediately, store it in accordance with the following requirements. After long-term storage, the equipment may be put back into use only after inspection and confirmation by professionals.

1. If the inverter has been stored for more than two years or has not been operated for more than 6 months after installation, it is recommended to put it into use only after inspection and testing by professionals.
2. To ensure good electrical performance of the electronic components inside the inverter, it is recommended to energize it once every 6 months during storage. If it has not been energized for more than 6 months, inspection and testing by professionals are recommended before putting it into use.
3. To ensure battery performance and service life, avoid prolonged idle storage. Long-term storage may cause deep discharge of the battery, resulting in irreversible chemical loss, capacity degradation, or even complete failure; timely use is recommended. If the battery needs long-term storage, perform maintenance according to the following requirements:

Battery Model	Battery Initial Storage SOC Range	Recommended Storage Temperature	Charge/Discharge Maintenance Interval[1]	Battery Maintenance Method[2]
LX F6.6-H	30%~50%	0~35℃	-20~0℃, ≤1month 0~35℃, ≤6month 35~45℃, ≤1month	For maintenance methods, please consult your dealer or after-sales service center.
LX F9.8-H				
LX F13.1-H				
LX F16.4-H				
LX F6.4-H-20	30%~40%	0~35℃	-20~0℃, ≤1month 0~35℃, ≤6month 35~45℃, ≤1month	
LX F9.6-H-20				
LX F12.8-H-20				
LX F16.0-H-20				
LX F19.2-H-20				
LX F22.4-H-20				
LX F25.6-H-20				
LX F28.8-H-20				
LX D5.0-10	30%~40%	0~35℃	-20~35℃, ≤12month 35~+45℃, ≤6month	
GW5.1-BAT-D-G20	30~40%	0~35℃	-20~35°C, 12 months 35~45°C, 6 months	For maintenance methods, please consult your dealer or after-sales service center.
GW8.3-BAT-D-G20				
GW5.1-BAT-D-G21				
GW8.3-BAT-D-G21				
GW6.0-BAT-D-G20	30~40%	0~35℃	-20~35°C, 12 months 35~45°C, 6 months 45~55°C, 1 month	
GW9.0-BAT-D-G20				

Packaging Requirements:

Ensure that the outer packaging box is not removed and that the desiccant inside the box is not lost.

Environmental Requirements:

1. Ensure that the equipment is stored in a cool place and avoid direct sunlight.
2. Ensure that the storage environment is clean, with appropriate temperature and humidity ranges and no condensation. If condensation is present at the equipment ports, do not install the equipment.
3. Ensure that the equipment is kept away from flammable, explosive, corrosive, and other hazardous items during storage.

Stacking Requirements:

1. Ensure that the inverter stacking height and orientation comply with the instructions on the packaging box label.
2. Ensure that there is no risk of tipping after the inverters are stacked.

4 Installation

DANGER

Use the delivered components shipped with the device when performing equipment installation and electrical connections; otherwise, any resulting equipment damage is not covered by the warranty.

4.1 System Installation and Commissioning Process

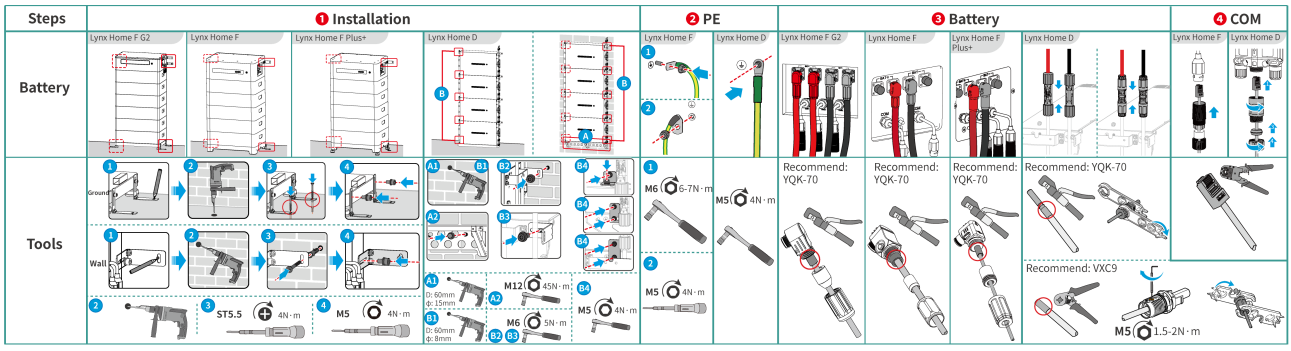

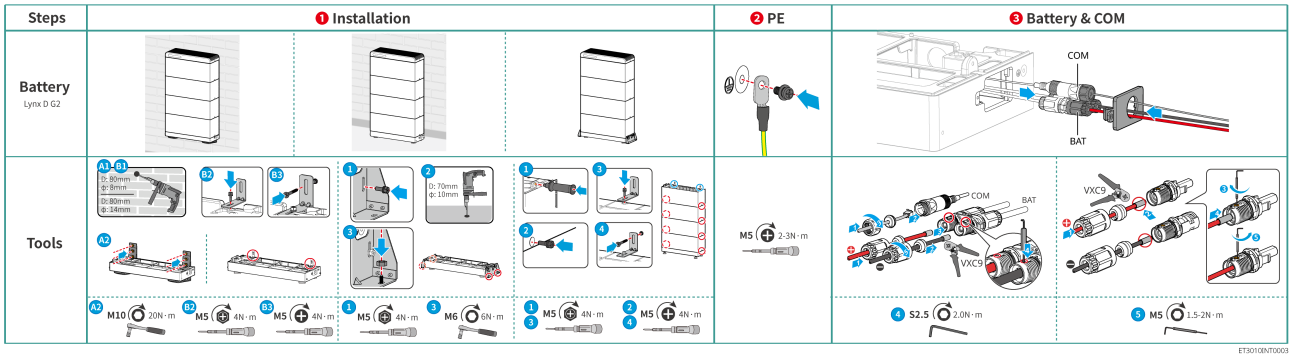

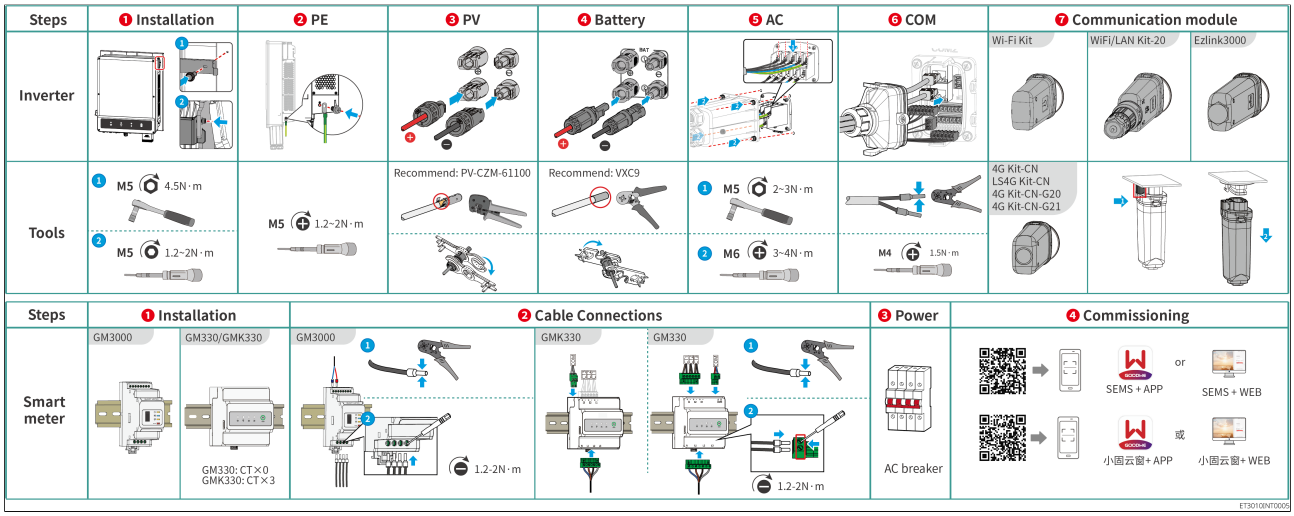

4.2 Installation Requirements

4.2.1 Installation Environment Requirements

NOTICE

Lynx home D:

- The main source of noise during battery operation is the active cooling system, specifically the axial-flow cooling fans with fluid-dynamics-optimized design.
- When the battery produces regular airflow sound of ≤35 dB(A): this phenomenon indicates that the cooling system is operating normally and will not affect the electrical performance, structural safety, or service life of the equipment. If you are sensitive to Noise Emission, select the installation location appropriately.

1. Do not install the equipment in flammable, explosive, corrosive, or similar environments.
2. The temperature and humidity of the equipment installation environment must be within the appropriate range.
3. The installation location must be out of reach of children and avoid locations where it can be easily touched.
4. During inverter operation, the enclosure temperature may exceed 60℃. Do not touch the enclosure before it cools down to prevent burns.
5. It is recommended to install the equipment in a sheltered location, away from direct sunlight, rain, snow accumulation, and similar conditions. If site conditions

prevent complete sheltering, ensure that the ambient temperature, humidity, and other conditions remain within the permissible range specified in the equipment specifications, and take necessary protective measures.

6. Adverse environmental conditions such as direct sunlight and high temperatures may cause inverter output power derating. When selecting the installation site, fully consider heat dissipation conditions and avoid direct sunlight on the equipment itself.
7. The equipment installation and storage site should avoid areas with direct cold air from air conditioner outlets. Excessive local temperature differences may cause condensation inside the equipment, which may lead to equipment damage.
8. The installation space must meet the equipment ventilation and heat dissipation requirements and operation space requirements.
9. The installation environment must meet the equipment's Ingress Protection Rating. The inverter, battery, and Smart Communication Stick are suitable for indoor and outdoor installation; the meter is suitable for indoor installation.
10. The equipment installation height must facilitate operation and maintenance, ensuring that equipment indicators and all labels are easy to view and terminal blocks are easy to operate.
11. The equipment installation altitude must be below the Max. Operating Altitude.
12. Before installing equipment outdoors in salt-affected areas, consult the equipment manufacturer. Salt-affected areas mainly refer to areas within 500 m of the coast. The affected area depends on sea breeze, precipitation, topography, and other conditions.
13. The DC cable and communication cable between the battery and inverter must be less than 3 m in length. Ensure that the installation distance between the inverter and battery meets the cable length requirements.
14. Keep away from strong magnetic fields to avoid electromagnetic interference. If there is a radio station or wireless communication equipment operating below 30 MHz near the installation location, install the equipment according to the following requirements:

- Inverter: Add a ferrite core with multiple turns on the inverter DC input cable or AC output cable, or add a low-pass EMI filter; or ensure that the distance between the inverter and the wireless electromagnetic interference equipment exceeds 30 m
- Other equipment: The distance between the equipment and the wireless electromagnetic interference equipment must exceed 30 m.

NOTICE

If installed in an environment below0℃, the battery will be unable to continue charging and recover energy after being fully discharged, causing Battery Undervoltage.

- Lynx home F、Lynx home F Plus+、Lynx home F G2: Charging temperature range:0<T<50°C; discharging temperature range:-20<T<50°C
- Lynx home D: Charging temperature range:0<T<53°C; discharging temperature range:-20<T<53°C
- GW5.1-BAT-D-G20, GW8.3-BAT-D-G20: Charging temperature range: -18℃-55°C; discharging temperature range:-20℃-55°C. If installed in an environment below-18℃, the battery will be unable to continue charging and recover energy after being fully discharged, causing Battery Undervoltage.
- GW5.1-BAT-D-G21, GW8.3-BAT-D-G21: Charging temperature range: 2℃-55°C; discharging temperature range:-20℃-55°C. If installed in an environment below2℃, the battery will be unable to continue charging and recover energy after being fully discharged, causing Battery Undervoltage.
- GW6.0-BAT-D-G20, GW9.0-BAT-D-G20: Charging temperature range: -20℃-55°C; discharging temperature range:-20℃-55°C. If installed in an environment below -20℃, the battery will be unable to continue charging and recover energy after being fully discharged, causing Battery Undervoltage.

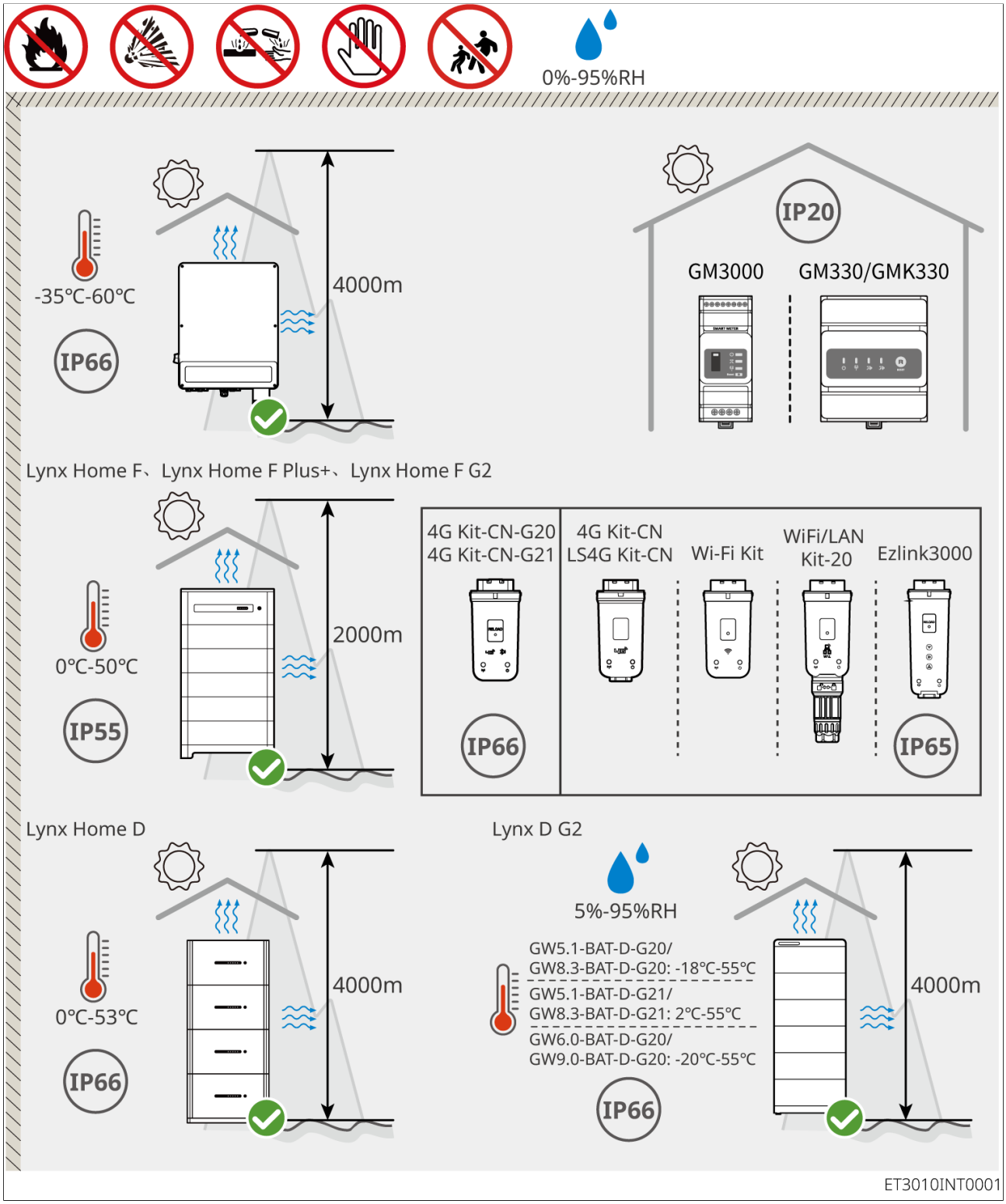

4.2.2 Installation Space Requirements

When installing equipment in the system, reserve a certain clearance around the

equipment to ensure sufficient installation and heat dissipation space.

- When using CAT 7E communication cables between inverters, the cable length shall not exceed 10 m; when using CAT 5E or CAT 6E communication cables, the cable length shall not exceed 5 m. Do not exceed 10 m for communication cables; otherwise, communication abnormalities may occur.
- Installing the CT requires a CAT 5E or higher shielded Ethernet cable, and the cable length shall not exceed 30 m.
- For the RS485 twisted-pair shielded cable used for communication between the inverter and the meter, the cable length shall not exceed 100 m.

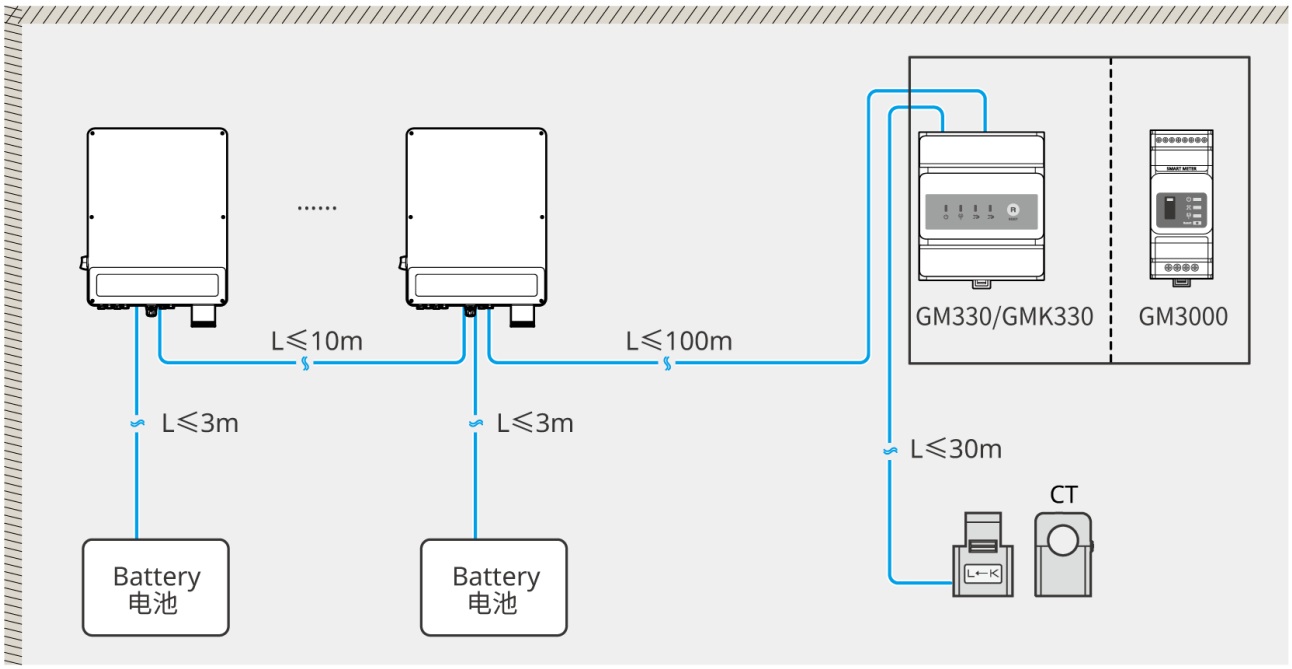

ET3010DSC0007

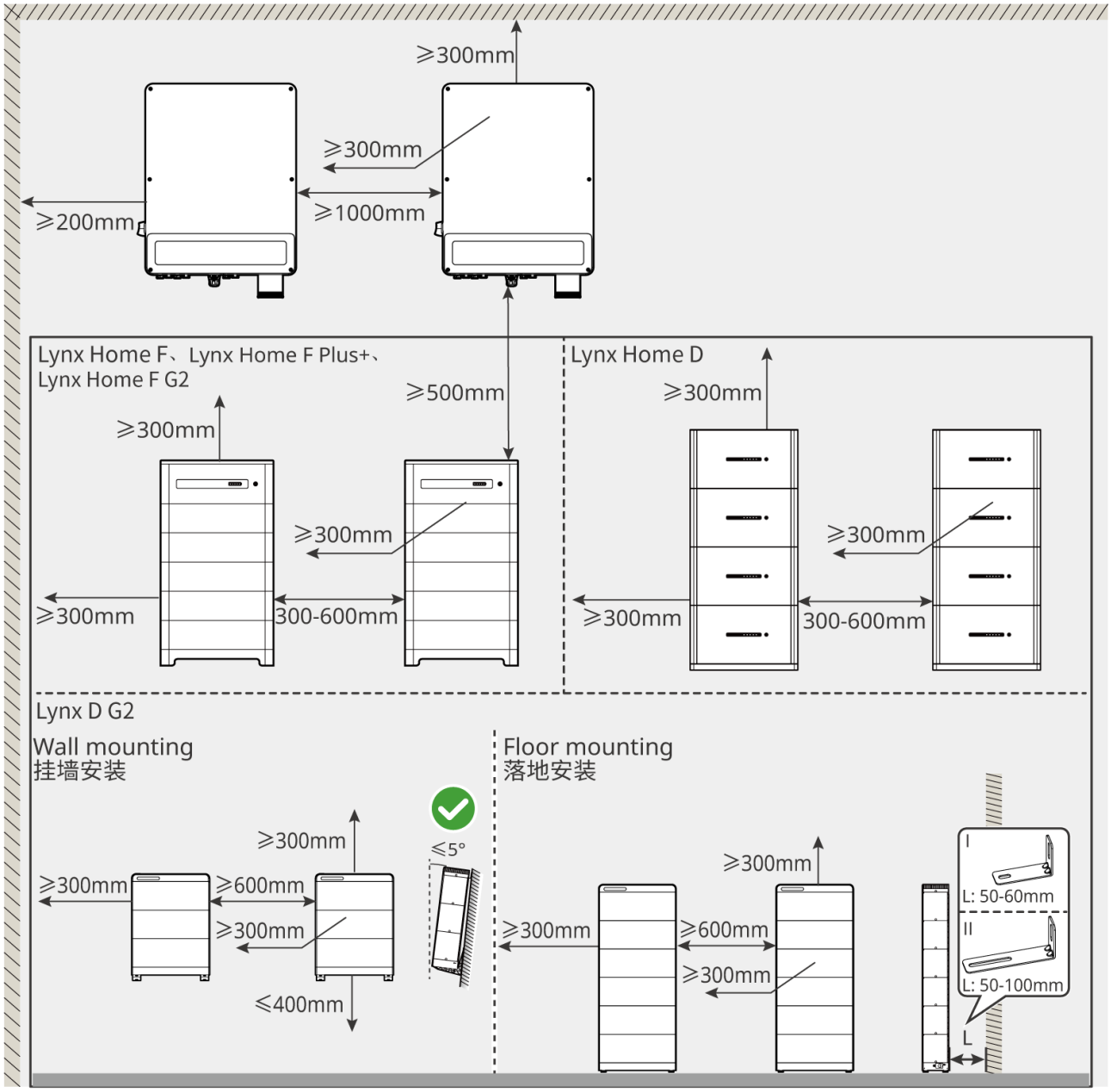

ET3010DSC0002

4.2.3 Tool Requirements

NOTICE

During installation, it is recommended to use the following installation tools. If necessary, other auxiliary tools may be used on site.

Installation Tools

Tool Type	Description	Tool Type	Description
	Diagonal Cutting Pliers	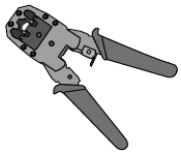	RJ45Crimping Tool
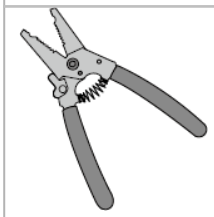	Wire Stripper	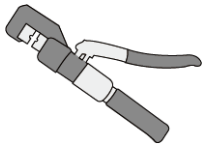	YQK-70Hydraulic Crimping Tool
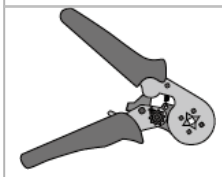	VXC9Hydraulic Crimping Tool		Spirit Level
	Open-End Wrench	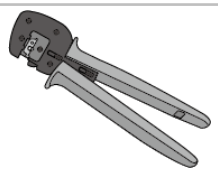	PVTerminal Crimping Tool PV-CZM-61100
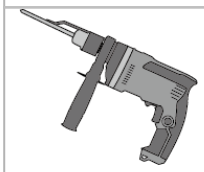	Impact Drill (Drill BitΦ8mm)	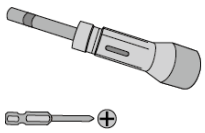	Torque Wrench M5、M6、M8
	Rubber Mallet		Socket Wrench Set
	Marker	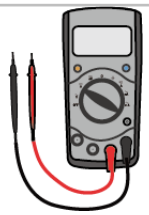	Multimeter Range≤1100V
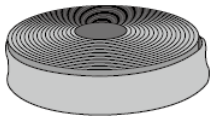	Heat-Shrink Tubing	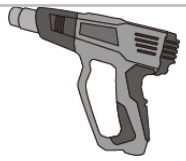	Heat Gun

Tool Type	Description	Tool Type	Description
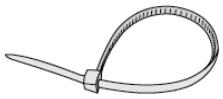	Cable tie		Vacuum Cleaner

Personal Protective Equipment

Tool Type	Description	Tool Type	Description
	Insulated Gloves, Protective Gloves	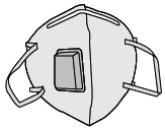	Dust Mask
	Goggles		Safety shoes

4.3 Equipment Handling

⚠CAUTION

- During transportation, handling, installation, and other operations, comply with the laws, regulations, and relevant standards of the country and region.
- Before installation, the equipment must be moved to the installation site. To avoid personal injury or equipment damage during handling, observe the following:
  1. Assign corresponding personnel based on the equipment Weight to prevent the equipment from exceeding the weight range that personnel can handle and causing injury.
  2. Wear safety gloves to avoid injury.
  3. Ensure the equipment remains balanced during handling to prevent it from falling.
  4. The battery system can be hoisted or transported to the installation site using a transport cart.
     a. When using an installation trolley, select a trolley with reference dimensions of 850 mm*700 mm*1900 mm, a load capacity of at least 300 kg, and a lifting height of 2 m; for specific usage, follow the trolley manufacturer's instructions. During on-site operation, pay attention to personal safety and comply with local regulatory requirements.
     b. When hoisting the equipment, use flexible lifting slings or straps. The load-bearing capacity requirements for a single strap are as follows:
        - GW5.1-BAT-D-G20，GW5.1-BAT-D-G21，GW6.0-BAT-D-G20 ⩾185KG
        - GW8.3-BAT-D-G20，GW8.3-BAT-D-G21，GW9.0-BAT-D-G20 ⩾240KG

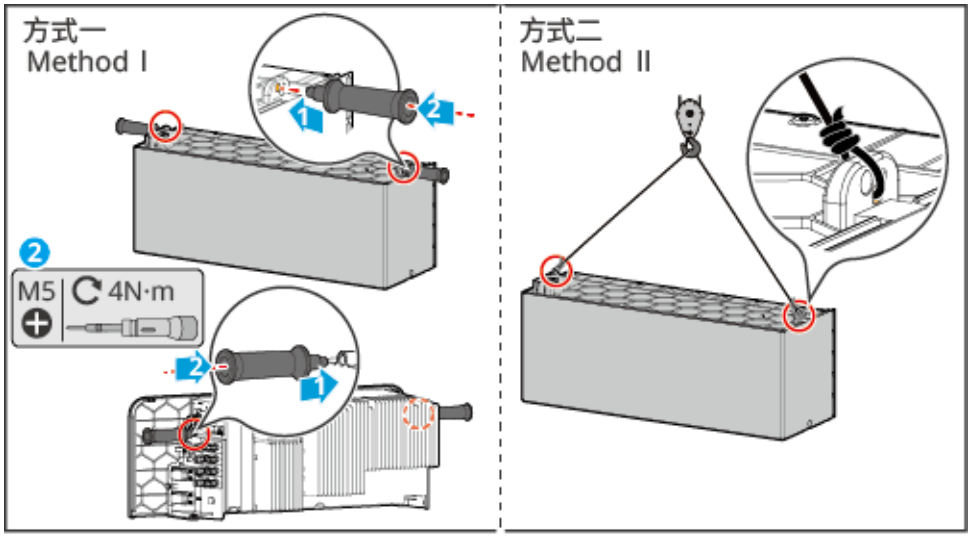

ESA20INT0010

Method 3

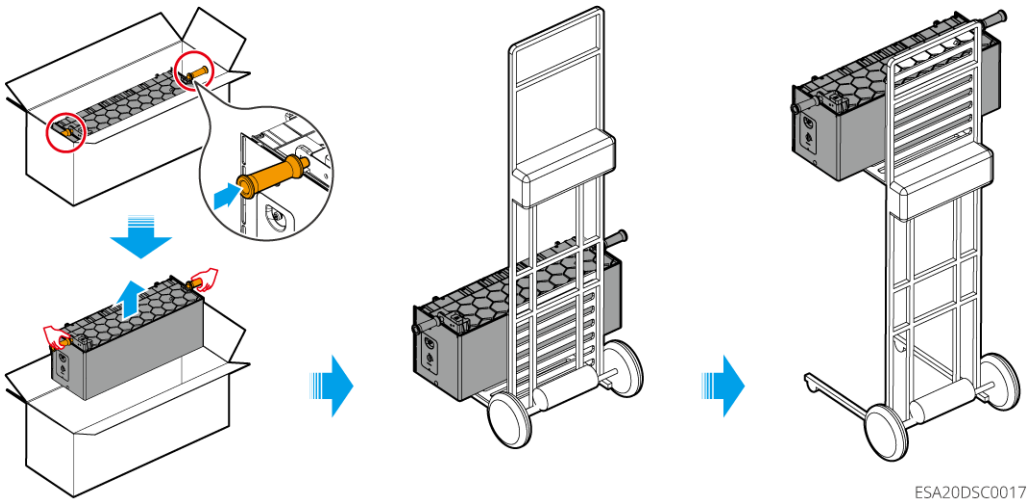

ESA20DSC0017

4.4 Installing the Inverter

⚠CAUTION

- When drilling, ensure the drilling positions avoid water pipes, cables, etc. in the wall to prevent hazards.
- When drilling, wear goggles and a dust mask to prevent dust from being inhaled into the respiratory tract or entering the eyes.
- Ensure the inverter is installed securely to prevent it from falling and injuring personnel.

1. Place the backplate level on the wall and mark the drilling positions with a marker.
2. Drill holes using an impact drill.
3. Secure the inverter backplate bracket to the wall using expansion screws.
4. Use the DC Switch lock to lock the DC Switch in the“OFF”position, and mount the inverter on the backplate. (Optional) Australia only: the DC Switch lock is user-supplied; ensure the hole diameter of the DC Switch lock meets the requirements.
5. (Optional) Lower the handle.
6. Tighten the screws on both sides to secure the backplate and inverter, ensuring the inverter is installed securely.

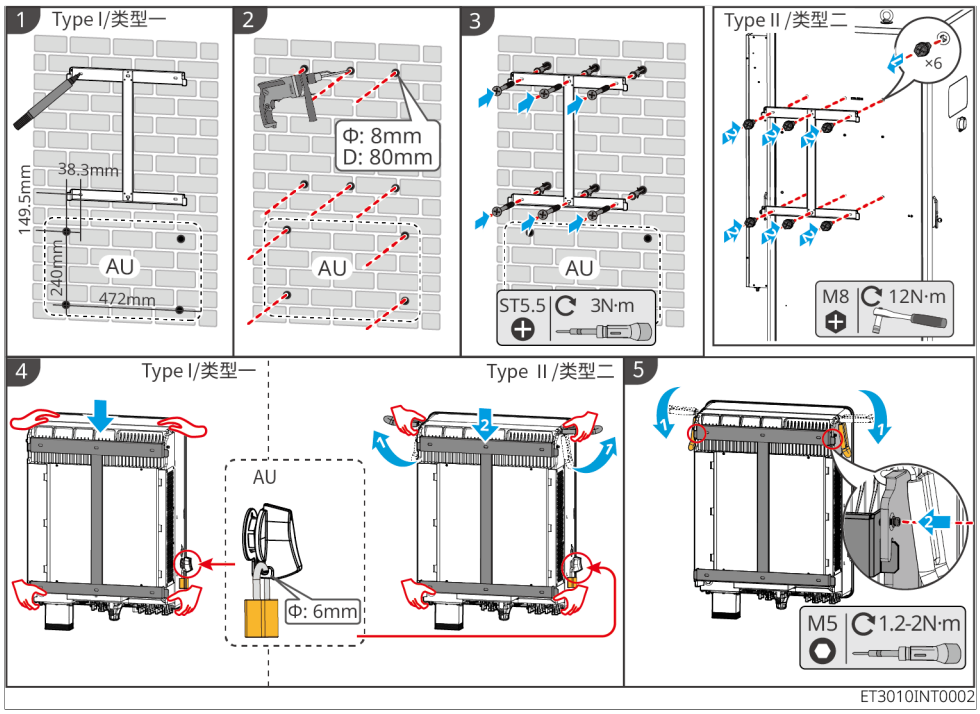

Install the Protection Cover (Australia Only)

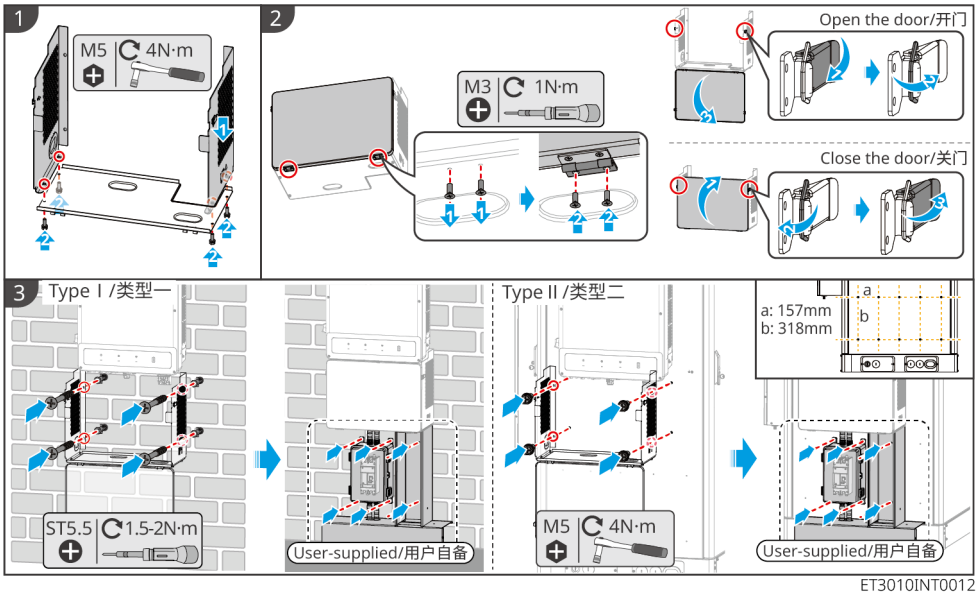

ET3010INT0012

Step1： Assemble the Protection cover.

Step2： Install the front cover.

Step3： Secure the Protection cover to the wall/side of the battery cabinet, and install circuit breakers, waterproof boxes, and cable trays in accordance with local regulatory requirements. Refer to the table below for specific requirements.

Equipment		Recommended model/specifications	Description
Circuit breaker	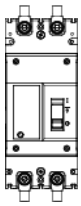	Select according to local laws and regulations • 2P DC Switch • Rated Current ≥63A • Nominal Voltage ≥1000V	Provided by the user.

Equipment		Recommended model/specifications	Description
Water proof enclosure	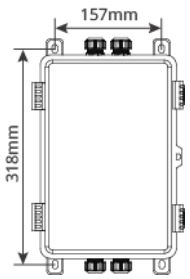	Waterproof rating > IP65 Hole spacing requirements: • Left-right hole spacing: 157 mm • Top-bottom hole spacing: 318 mm Appearance and dimensions are for reference only.	Provided by the user. If the hole spacing of the waterproof enclosure does not meet the requirements and it cannot be secured to the battery cabinet, please provide a mounting plate. First, drill holes in the mounting plate as required and secure it to the battery cabinet; then secure the waterproof enclosure to the mounting plate.
Cable tray	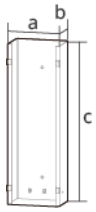	a: 250mm b: 150mm c: 510mm Appearance is for reference only.	Provided by the user.

4.5 Install the Battery

4.5.1 Install the Lynx Home F Series

WARNING

- Ensure that the control box is installed above the battery. Do not install the battery above the control box.
- During battery system installation, ensure that the installation is level and secure. When placing the battery base, battery, or control box, confirm that the holes in the upper and lower layers are aligned; the anti-tip bracket must be vertical and in close contact with the floor, wall, or battery system surface.
- When drilling with an impact drill, use cardboard or other covering materials to shield the battery system to prevent foreign objects from entering the equipment and causing equipment damage.
- Before installing the battery system, remove the Protection plate from the battery module wiring terminal port.
- After marking the drilling positions with a marker, remove the control box to avoid equipment damage when the impact drill is too close to the control box during drilling.

4.5.1.1 Install Lynx Home F

1. Install the anti-tip bracket on the base.
2. Place the base against the wall, mark the drilling positions with a marker, and remove the base.
3. Drill holes using an impact drill.
4. Secure the base with expansion screws and ensure the base is oriented correctly.
5. Remove the protective cover from the battery connection terminals.
6. Install the battery on the base, ensuring that the battery orientation matches the base orientation; then install the remaining battery modules and the control box according to the actual battery system type selected.
7. Pre-install the control box anti-tip bracket on the control box.
8. Install the control box above the battery, ensure it is placed securely, mark the drilling positions with a marker, and remove the control box.
9. Drill holes using an impact drill.
10. Secure the control box anti-tip bracket to the wall.
11. Secure the anti-tip bracket to the control box.

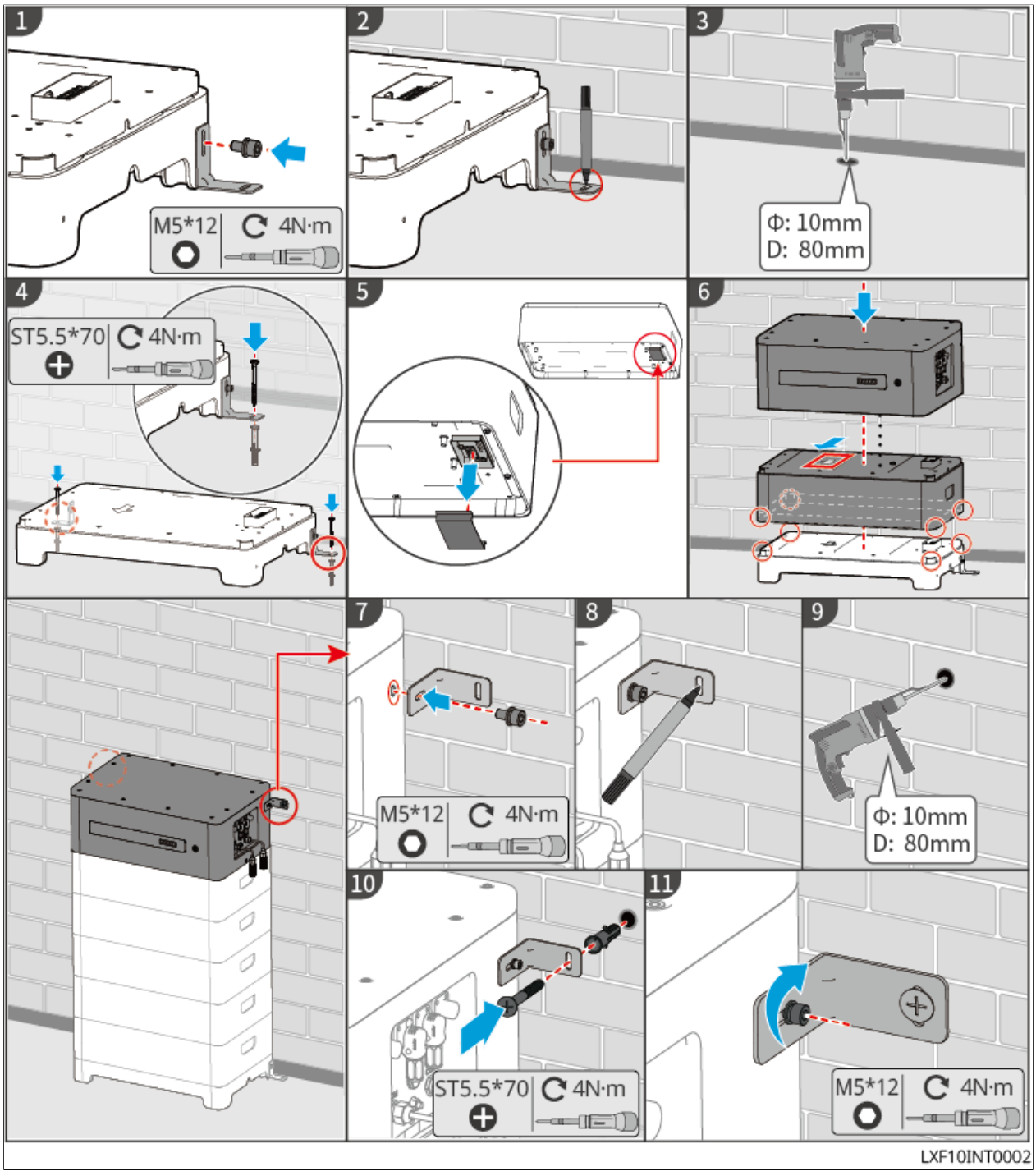

Figure7 Battery installation

4.5.1.2 Install Lynx Home F Plus+

1. (Optional) Install the adjustable feet on the battery base.
2. Install the anti-tip bracket on the base.
3. Place the base against the wall, mark the drilling positions with a marker, and remove the base.
4. Drill holes using an impact drill.
5. Secure the base with expansion screws and ensure the base is oriented correctly.
6. Remove the protective cover from the battery connection terminals.
7. Install the battery on the base, ensuring that the battery orientation matches the base orientation; then install the remaining battery modules and the control box according to the actual battery system type selected.
8. Pre-install the control box anti-tip bracket on the control box.
9. Install the control box above the battery, ensure it is placed securely, mark the drilling positions with a marker, and remove the control box.
10. Drill holes using an impact drill.
11. Secure the control box anti-tip bracket to the wall.
12. Secure the anti-tip bracket to the control box.
13. (Optional) After the battery system is installed, check whether it is level and secure. If tilting or wobbling occurs, adjust the battery system installation by rotating the adjustable feet.

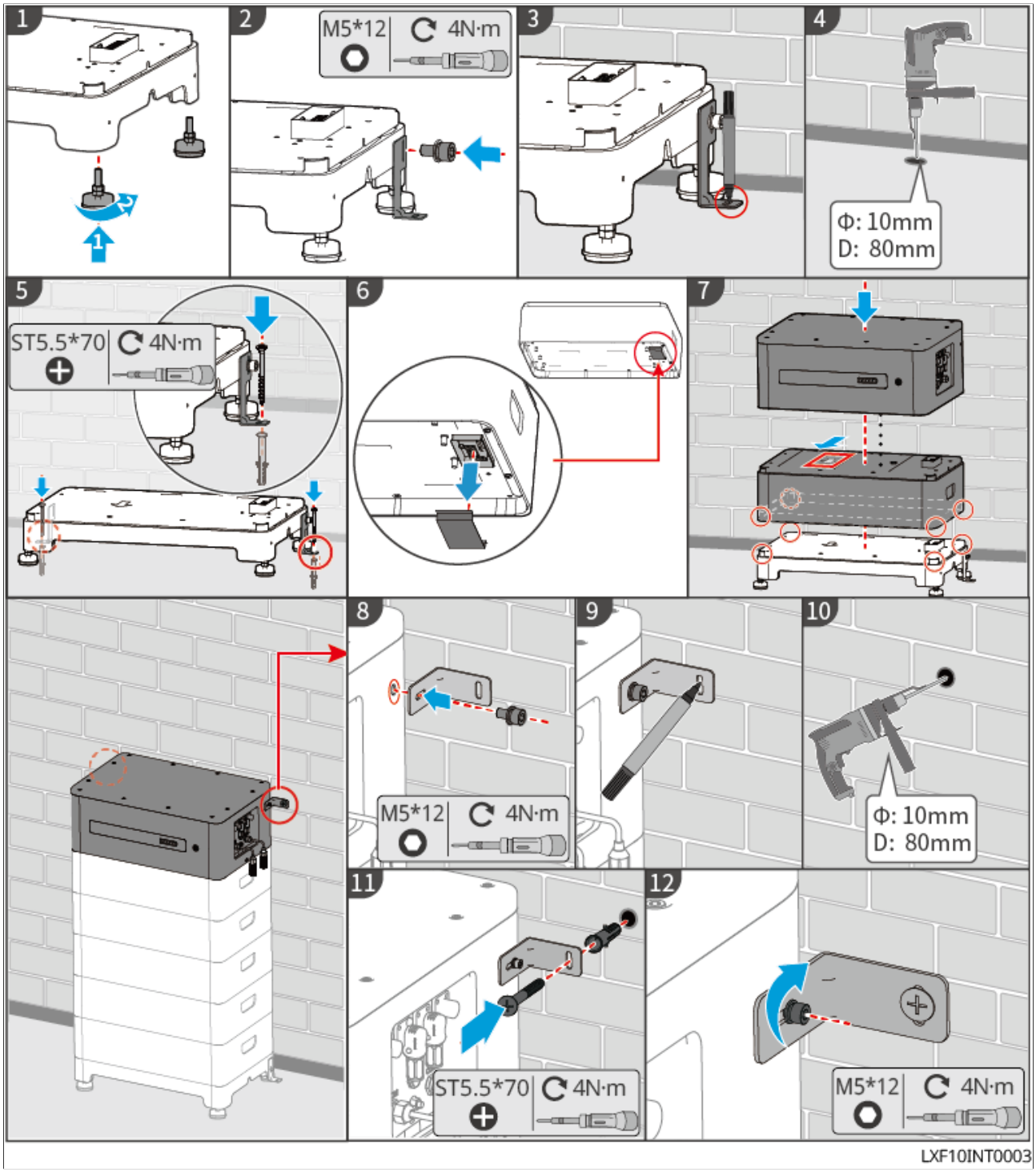

Figure8 Battery installation

4.5.1.3 Install Lynx Home F G2

1. (Optional) Install the adjustable feet on the battery base.

2. Install the anti-tip bracket on the base.
3. Place the base against the wall, mark the drilling positions with a marker, and remove the base.
4. Drill holes using an impact drill.
5. Secure the base with expansion screws and ensure the base is oriented correctly.
6. Install the battery on the base, ensuring that the battery orientation matches the base orientation; then install the remaining battery modules and the control box according to the actual battery system type selected.
7. Install the control box anti-tip bracket.
8. Install the control box above the battery, ensure it is placed securely, mark the drilling positions with a marker, and remove the control box.
9. Drill holes using an impact drill.
10. Tighten the control box anti-tip bracket.
11. Install the anti-tip bracket and junction box

    - (Optional) Secure the control box anti-tip bracket.
    - (Optional) Install the junction box.

12. (Optional) After the battery system is installed, check whether it is level and secure. If tilting or wobbling occurs, adjust the battery system installation by rotating the adjustable feet.

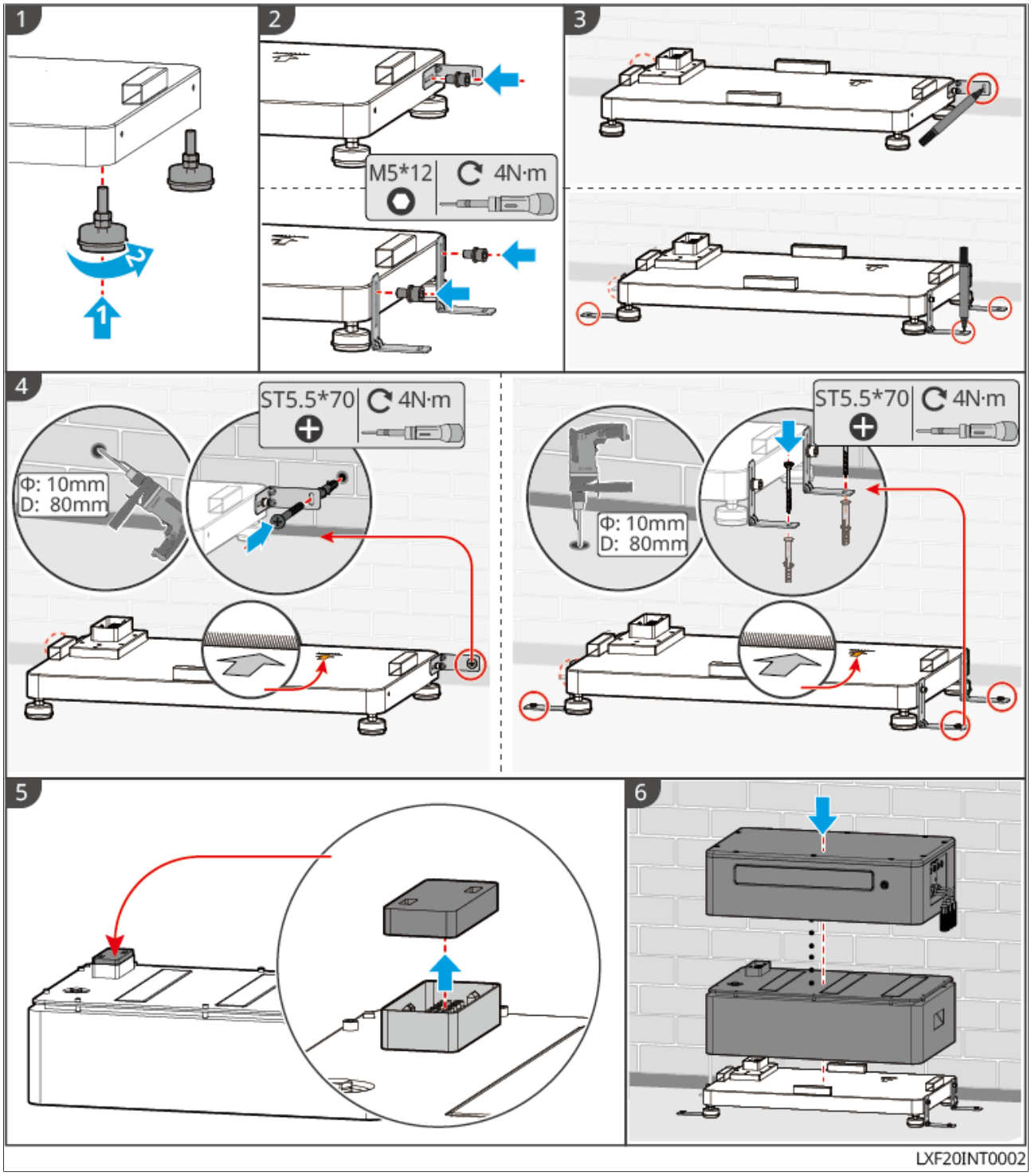

Figure9 Base and battery installation

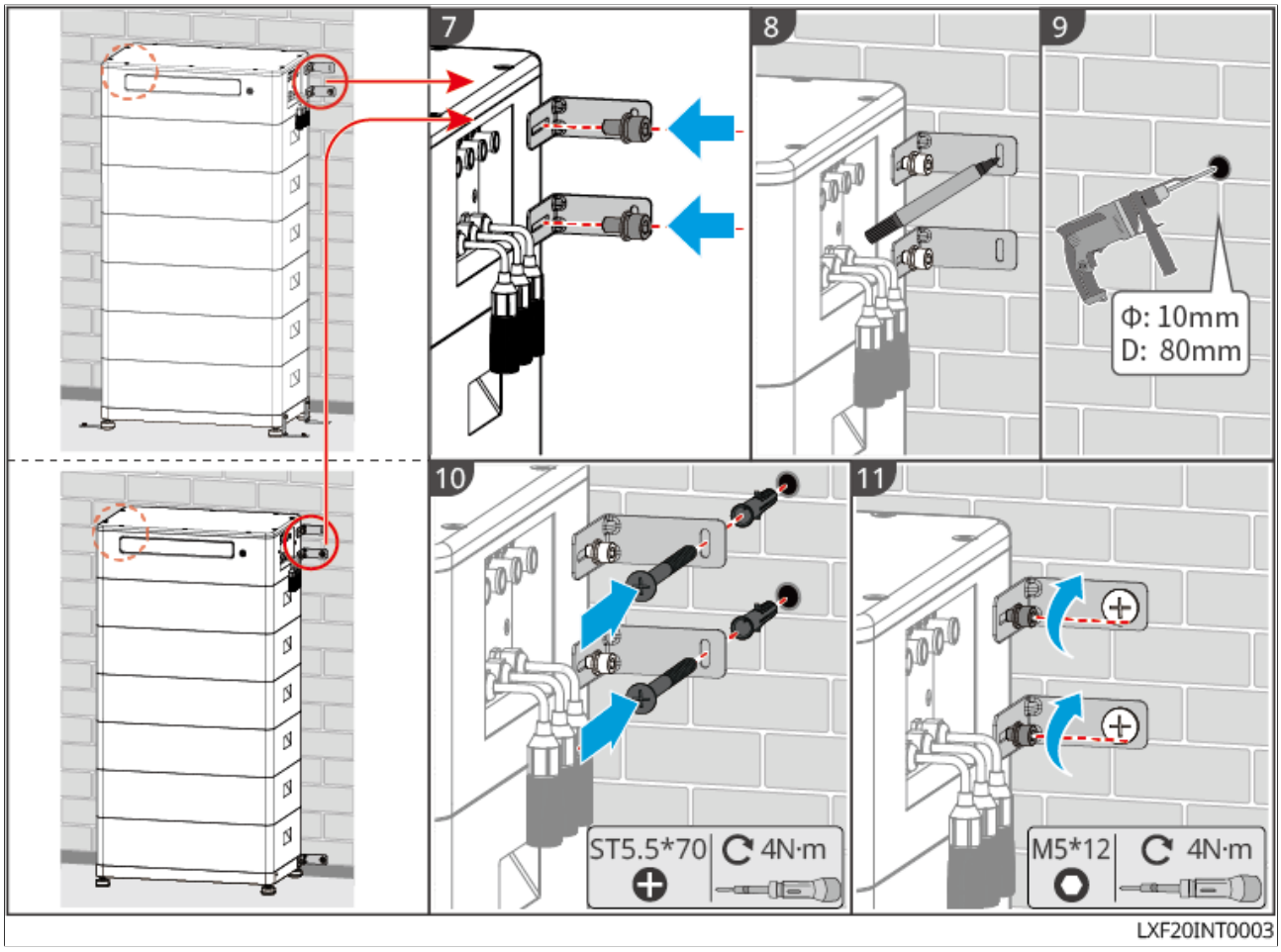

Figure10 Secure the battery system

4.5.2 Install Lynx Home D

NOTICE

- The battery system must be installed on the base or mounting bracket.
- When stacking batteries, use auxiliary tools for installation.
- When a single battery stack exceeds3units, base mounting is recommended.
- Stack the batteries according to the recommended battery stacking method.

Battery stacking method		
Total number of batteries (units)	First stack (units)	Second stack (units)

Battery stacking method		
8	4	4
7	4	3
6	3	3
5	3	2
4	2	2
3	3	-
2	2	-
1	1	-

Install the mounting bracket (optional)

1. Keep the mounting bracket flush against the wall. Ensure that the mounting bracket is placed securely, and use a spirit level to check whether it is level.
2. After adjusting the position and levelness of the mounting bracket, use a marker to mark the drilling positions. After marking, remove the mounting bracket.
3. Drill holes and install expansion bolts.
   a. Drill holes using an impact drill.
   b. Clean the holes.
   c. Use a rubber mallet to install the expansion bolts into the holes.
   d. Use an open-end wrench to tighten the nuts clockwise so that the bolts expand.
   e. Rotate the nut counterclockwise to remove it.
4. Use an open-end wrench to secure the wall bracket to the wall.

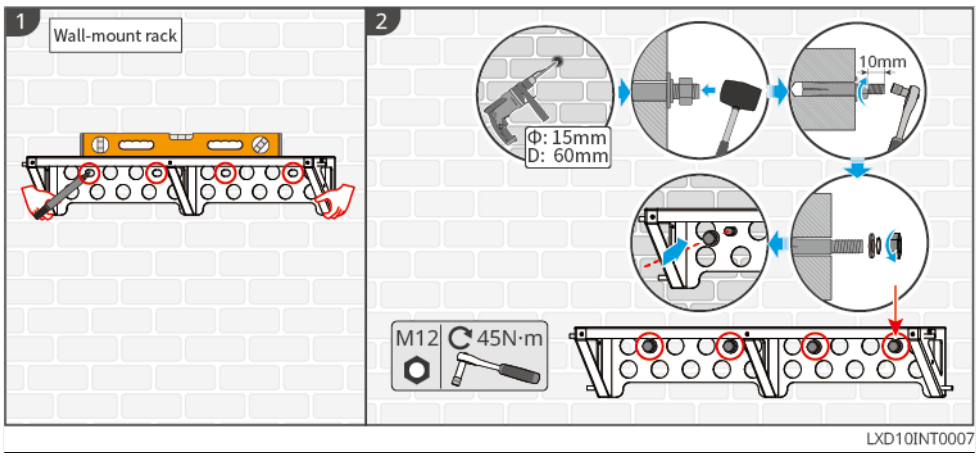

Figure11 Install the mounting bracket

Install the base (optional)

NOTICE

Check whether the accessory package contains adjustable feet. If not and they are needed, contact the dealer or after-sales service to obtain them.

1. Install the adjustable feet on the bottom of the base.
2. Place the base at a distance of15-20mmfrom the wall, keep it parallel to the wall, and ensure the floor is level.
3. When installing batteries on the base, ensure that the left side of the battery is aligned flush with the base stop block.

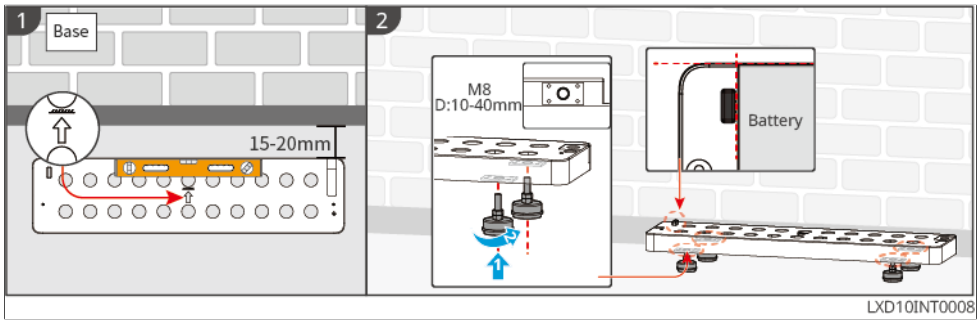

Figure12 Install the base

Install the Battery

NOTICE

- For floor-standing installation, two fixing brackets for the base and battery are supplied with the unit. To prevent the battery from loosening or shifting, install one of the fixing brackets on one side of the battery positioning block, and keep the other fixing bracket as a spare.
- For wall-mounted installation, to prevent the battery from loosening or shifting, use the fixing brackets shipped with the unit to secure both sides of the battery and the mounting bracket respectively.

1. Pre-tighten the anti-tip bracket onto the battery.
2. Place the battery on the installed mounting bracket or base. Keep the anti-tip bracket flush against the wall, mark the drilling positions, and after marking, remove the battery; alternatively, use a spirit level to mark the drilling positions.
3. Install expansion bolts and secure the battery.
   a. Drill holes using an impact drill.
   b. Clean the holes.
   c. Use a rubber mallet to install the expansion bolts into the holes.
   d. Use an open-end wrench to tighten the nuts clockwise so that the bolts expand.
   e. Rotate the nut counterclockwise to remove it.
   f. Reinstall the battery on the base or mounting bracket, and adjust the battery position so that the battery is at a distance of15-20mm。
   g. Use an open-end wrench to secure the battery to the wall, and use a torque screwdriver to tighten the anti-tip bracket to the battery.
4. Install and tighten the inter-battery fixing brackets.
   If multiple batteries need to be installed, repeat steps1to step4to complete the installation of all batteries. A single battery stack must not exceed4units.
5. Install and tighten the fixing brackets between the battery and the base or mounting bracket.

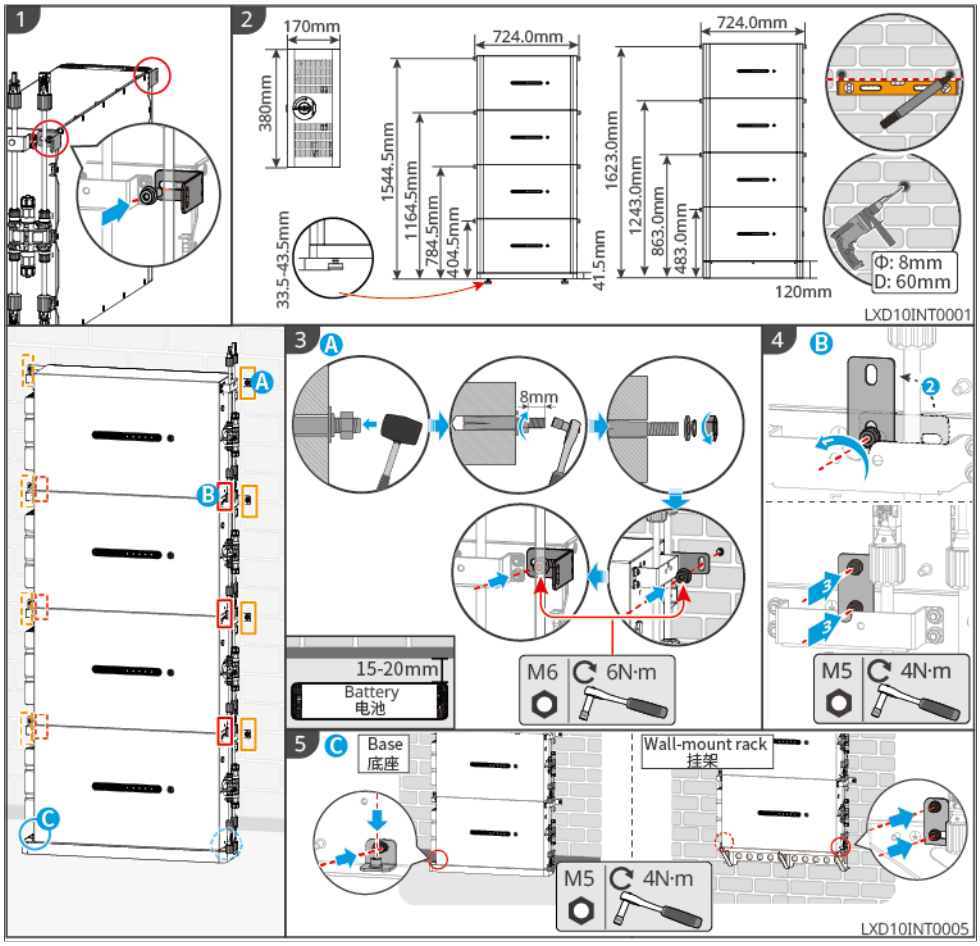

Figure13 Install the Battery

4.5.3 Installing Lynx D G2

⚠CAUTION

- When drilling, ensure the drilling positions avoid water pipes, cables, etc. in the wall to prevent hazards.
- When drilling, wear goggles and a dust mask to prevent dust from being inhaled into the respiratory tract or entering the eyes.
- During installation of the battery system, ensure that the installation is level and secure. When placing the battery base and batteries, confirm that the upper and lower mounting holes are aligned; the anti-tip bracket must be vertically flush against the floor, wall, or battery system surface.
- When drilling with an impact drill, use cardboard or other covering materials to shield the battery system to prevent foreign objects from entering the equipment and causing equipment damage.
- For wall-mounted installation, to ensure personal and property safety, you must assess the wall's load-bearing capacity.

NOTICE

- The batteries must be installed on the base; the base can be floor-mounted or installed on the mounting bracket.
- For floor-mounted installation, a maximum of 4 batteries can be stacked away from the wall, and a maximum of 6 batteries can be stacked against the wall.
- The maximum stacking quantity when installed using the mounting bracket is as follows:
  - Same-energy stacking:
    - GW5.1-BAT-D-G20，GW5.1-BAT-D-G21: Up to 3 units.
    - GW8.3-BAT-D-G20，GW8.3-BAT-D-G21: Up to 2 units.
    - GW6.0-BAT-D-G20: Up to 3 units.
    - GW9.0-BAT-D-G20: Up to 2 units.
  - Mixed-energy stacking:
    - When GW5.1-BAT-D-G20 and GW5.1-BAT-D-G21 are mixed-stacked with GW6.0-BAT-D-G20, a single system group supports a maximum of 3 units.
    - GW8.3-BAT-D-G20, GW8.3-BAT-D-G21, GW9.0-BAT-D-G20, and models mixed-stacked with them, a single system group supports a maximum of 2 units.
- The base, mounting bracket, and topmost battery must be secured to the wall using anti-tip brackets.
- When marking the drilling positions for bracket installation, have one person hold the base steady and another person mark the drilling positions with a marker.
- When installing batteries, remove the protective covers from the blind-mate connectors before stacking.

Wall-mounted base installation

Step 1: Install the base on the mounting bracket.

Step 2: Place the mounting bracket flush against the wall. Ensure that the bracket is placed securely and observe the bubble level in the middle of the base.

Step 3: After adjusting the position and levelness of the mounting bracket, use a marker to mark the drilling positions. After marking, remove the bracket. (A: PACK mounting holes; B: bracket mounting holes.)

Step 4: Drill holes and install expansion bolts.

1. Drill holes using an impact drill.

2. Clean the holes.
3. Use a rubber mallet to install the expansion bolts into the holes.
4. Use an open-end wrench to tighten the nuts clockwise so that the bolts expand.
5. Rotate the nut counterclockwise to remove it.
6. Use a torque screwdriver to fasten the anti-tip bracket to the wall.

Step 5: Use a hex wrench to secure the mounting bracket to the wall.

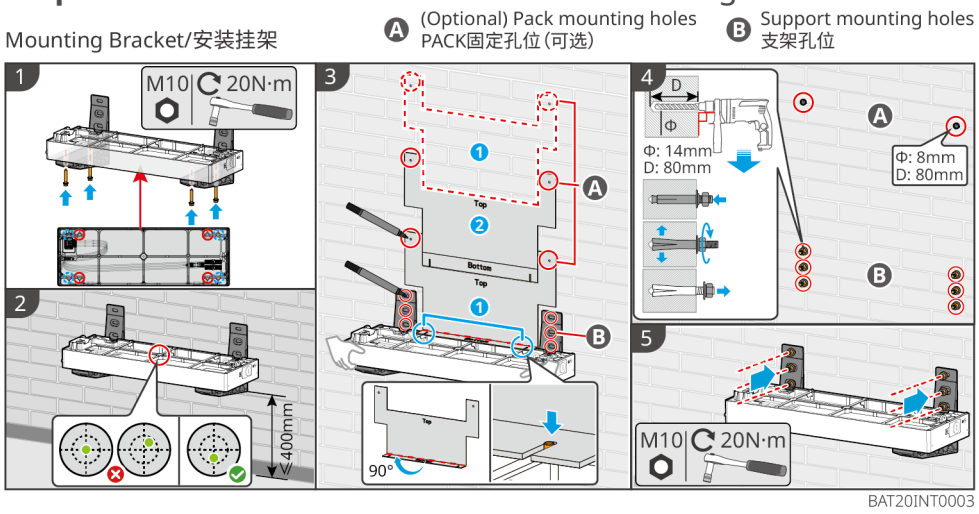

Base installation against the wall

Step 1: Install the adjustable feet at the bottom of the base, and secure the anti-tip bracket to the base.

Step 2: Place the base at a distance of 50-60mmfrom the wall, keeping it parallel to the wall. Observe the spirit level in the middle of the base; if the bubble is not centered, level it using the adjustable feet.

Step 3: After adjusting the position and levelness of the base, use the drilling marking paper to mark the drilling positions. After marking, remove the base. (A: PACK fixing hole positions; B: bracket fixing hole positions.)

Step 4: Use an impact drill to drill holes, and clean the holes.

Step 5: Use a Phillips screwdriver to secure the anti-tip bracket to the wall.

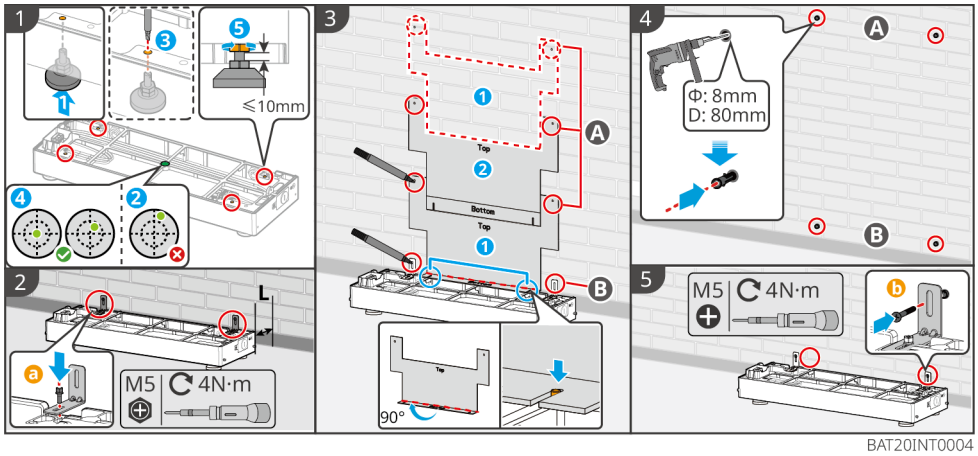

Installing the base away from the wall

Step 1: Install the adjustable feet at the bottom of the base. Observe the spirit level in the middle of the base; if the bubble is not centered, level it using the adjustable feet.

Step 2: After adjusting the position and levelness of the base, secure the off-wall bracket to the base. Select a suitable position to mark the drilling positions. After marking, remove the base.

Step 3: Drill holes and install expansion bolts.

1. Drill holes using an impact drill.
2. Clean the holes.
3. Use a rubber mallet to install the expansion bolts into the holes.
4. Use an open-end wrench to tighten the nuts clockwise so that the bolts expand.
5. Rotate the nut counterclockwise to remove it.
6. Use a torque screwdriver to secure the anti-off-wall bracket to the ground.

Step 4: Use an open-end wrench to secure the base to the ground.

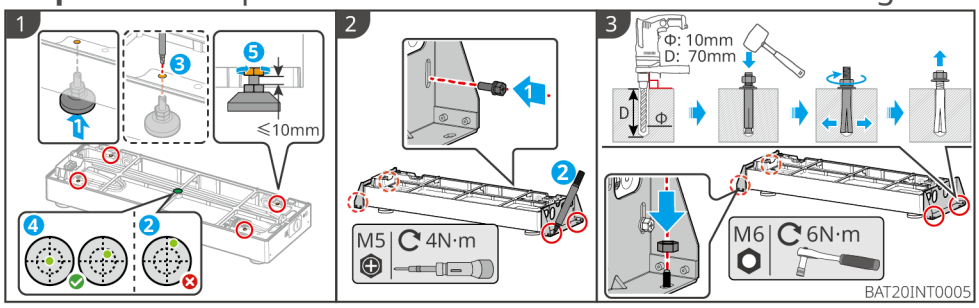

Install the battery, termination resistor, and battery protective cover

Step 1: Remove the protective cover from the blind-mate connector at the bottom of the battery, install the handles (optional), and stack the battery onto the base.

If installing more than 3 batteries, please use a lifting tool.

Step 2: Tighten the screws between the battery and the base or between batteries.

If you need to install multiple batteries, please repeat**Step1**、**Step2**to complete the installation of all batteries.

Step 3 (optional): Secure the topmost battery to the wall using the anti-tip bracket。

Step 4: Install the blind-mate connector or termination resistor.

Step 5: Install the battery protective cover and tighten the side screws.

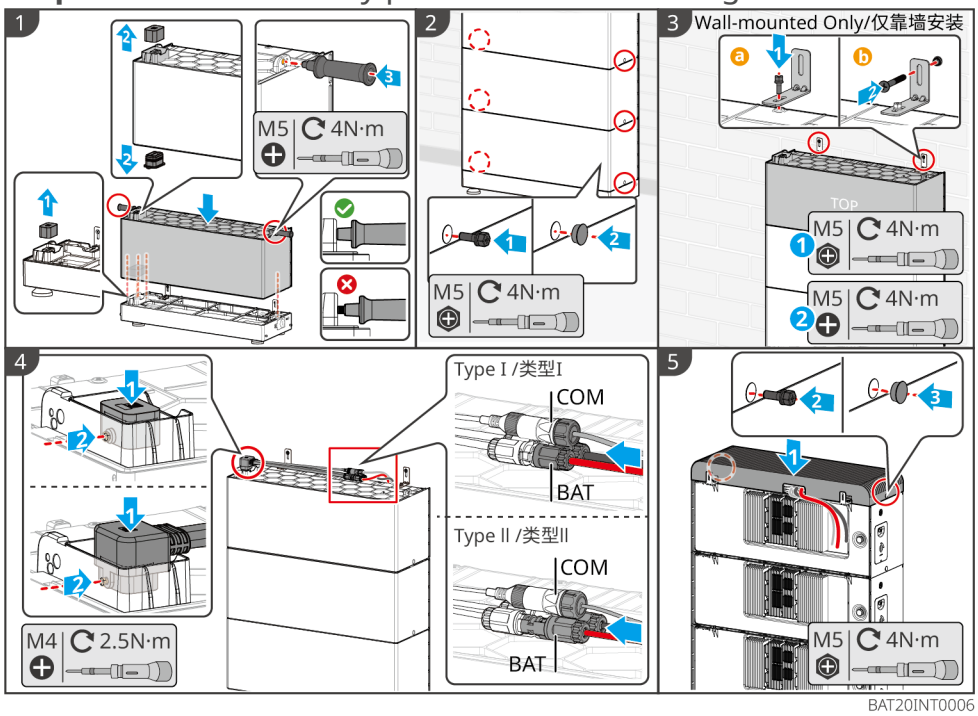

BAT20INT0006

4.6 Install the Meter

⚠WARNING

In areas with lightning hazards, if the meter cable length exceeds 10 m and the cable is not routed in grounded metal conduit, it is recommended to install external lightning protection devices.

GM3000

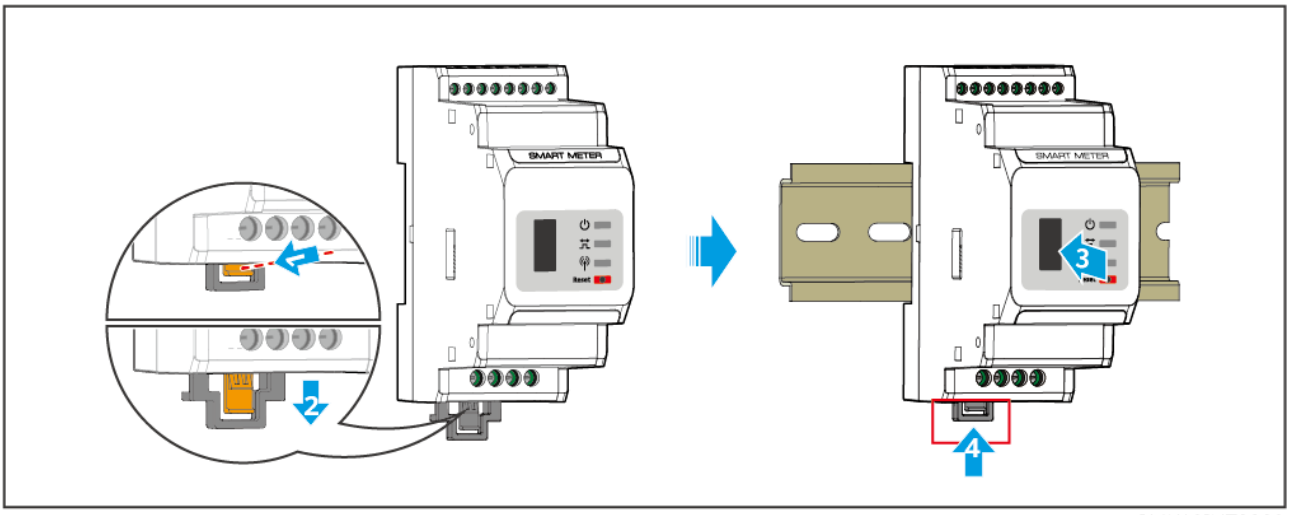

GMK10INT0002

GM330&GMK330

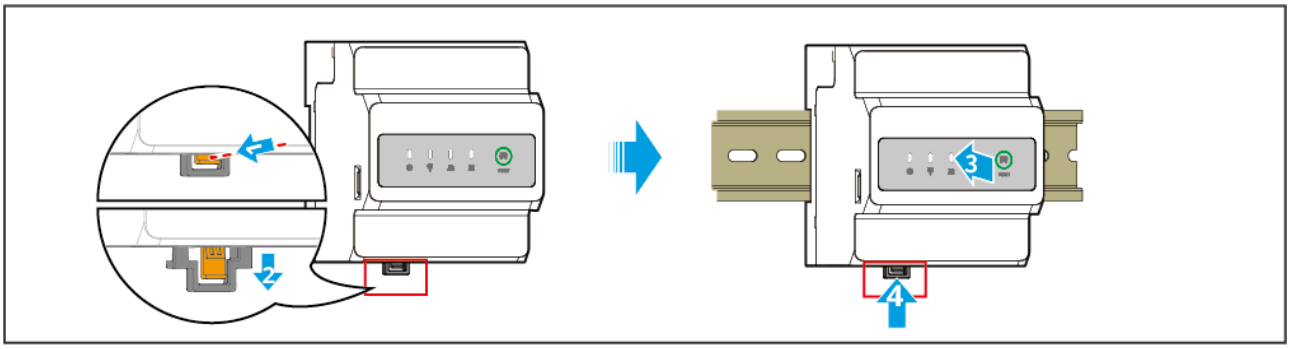

GMK10INT0003

5 System Wiring

⚠DANGER

- Cable laying, routing, and connection must comply with local laws, regulations, and standards.
- All operations during electrical connection and the specifications of cables and components used must comply with local laws and regulations.
- Before making electrical connections, disconnect the device's DC Switch and AC output switch to ensure the device is powered off. Live operation is strictly prohibited; otherwise, hazards such as electric shock may occur.
- Cables of the same type should be bundled together and routed separately from cables of different types; intertwining or crossing is prohibited.
- If cables are subjected to excessive tensile force, poor connections may result. When connecting, reserve a certain length of cable before connecting it to the inverter terminals.
- When crimping terminals, ensure that the cable conductor is in full contact with the terminal. Do not crimp the cable insulation together with the terminal; otherwise, the device may fail to operate, or after operation, poor connection may cause heating and damage to the inverter terminal block.
- For unused cable glands and ports (including communication ports), use the dedicated terminals or plugs supplied in the accessory box to seal them reliably. Otherwise, the following risks may occur:
  - Electric shock hazard: Exposed electrical ports may allow personnel to directly contact live parts, causing electric shock accidents.
  - Protection failure: Exposed ports allow dust, moisture, or foreign objects to enter, which may cause short circuits, fire, or equipment failure.

NOTICE

- During electrical connections, wear personal protective equipment such as safety shoes, protective gloves, and insulating gloves as required.
- Only professionals are permitted to perform operations related to electrical connections.
- The cable colors in the figures in this document are for reference only; actual cable specifications must comply with local regulatory requirements.
- For parallel systems, observe the safety precautions in the user manuals corresponding to the relevant products in the system.

5.1 System Wiring Electrical Block Diagram

NOTICE

- Depending on local regulatory requirements, the wiring methods for the N and PE conductors of the inverter's ON-GRID and BACK-UP ports differ; local regulatory requirements shall prevail.
- The inverter's ON-GRID AC port has a built-in relay. When the inverter is in off-grid mode, the built-in ON-GRID relay is open; when the inverter is in grid-connected operating mode, the built-in ON-GRID relay is closed.
- After the inverter is powered on, the BACK-UP AC port is live. If maintenance is required for BACK-UP loads, power off the inverter; otherwise, electric shock may occur.

The N and PE wires are connected together in the distribution box.

NOTICE

- To maintain neutral integrity, the neutral wires on the grid-tied side and the off-grid side must be connected together; otherwise, the off-grid function will not work properly.
- The following figure is a schematic of the grid system for regions such as Australia and New Zealand:

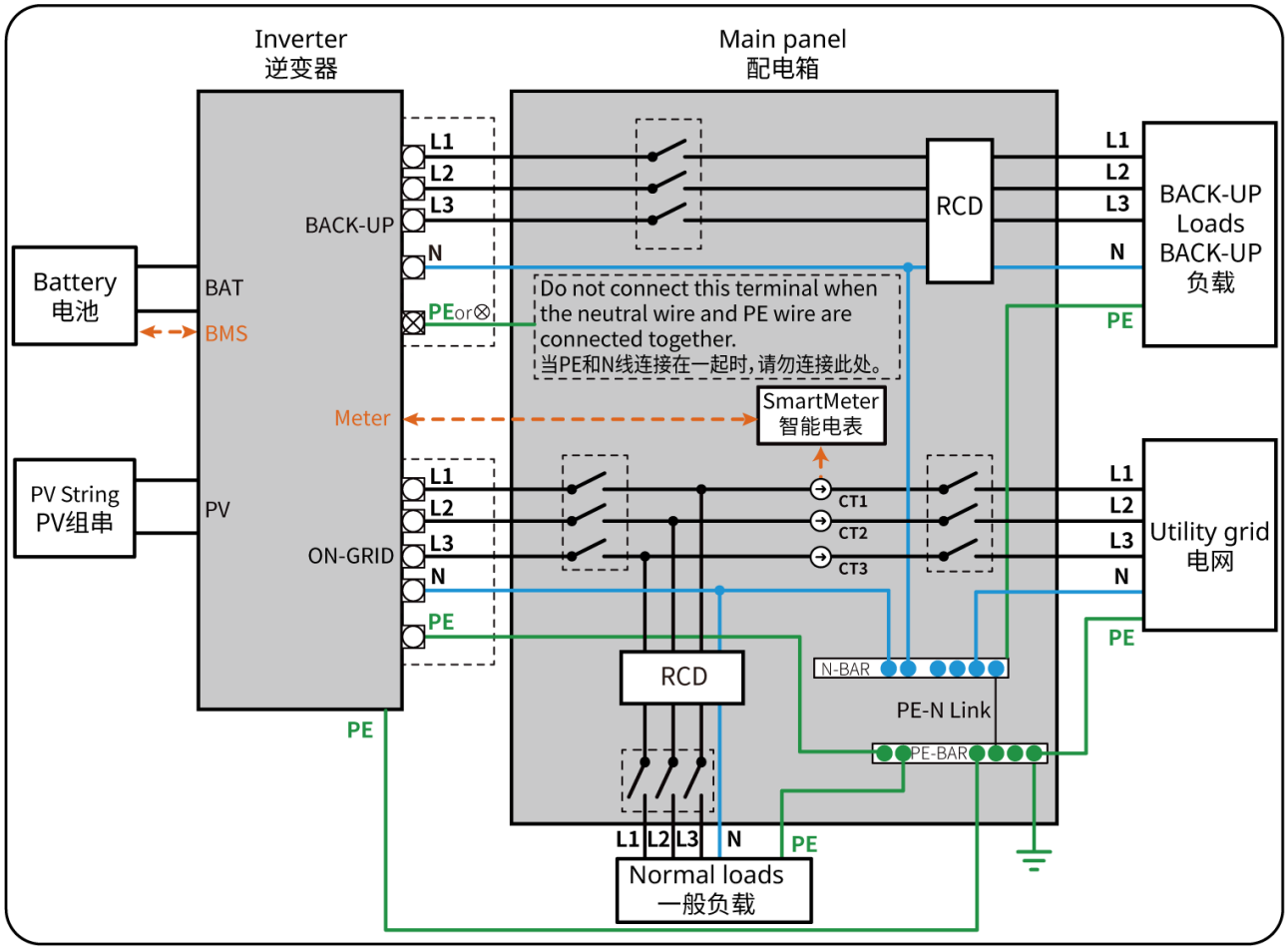

ET3010NET0015

NandPEwires are wired separately in the distribution box.

NOTICE

- Please ensure that the BACK-UP Protection ground wire is correctly and securely connected; otherwise, the BACK-UP function may be abnormal when a grid fault occurs.
- For regions other than Australia, New Zealand, etc., the following wiring method applies:

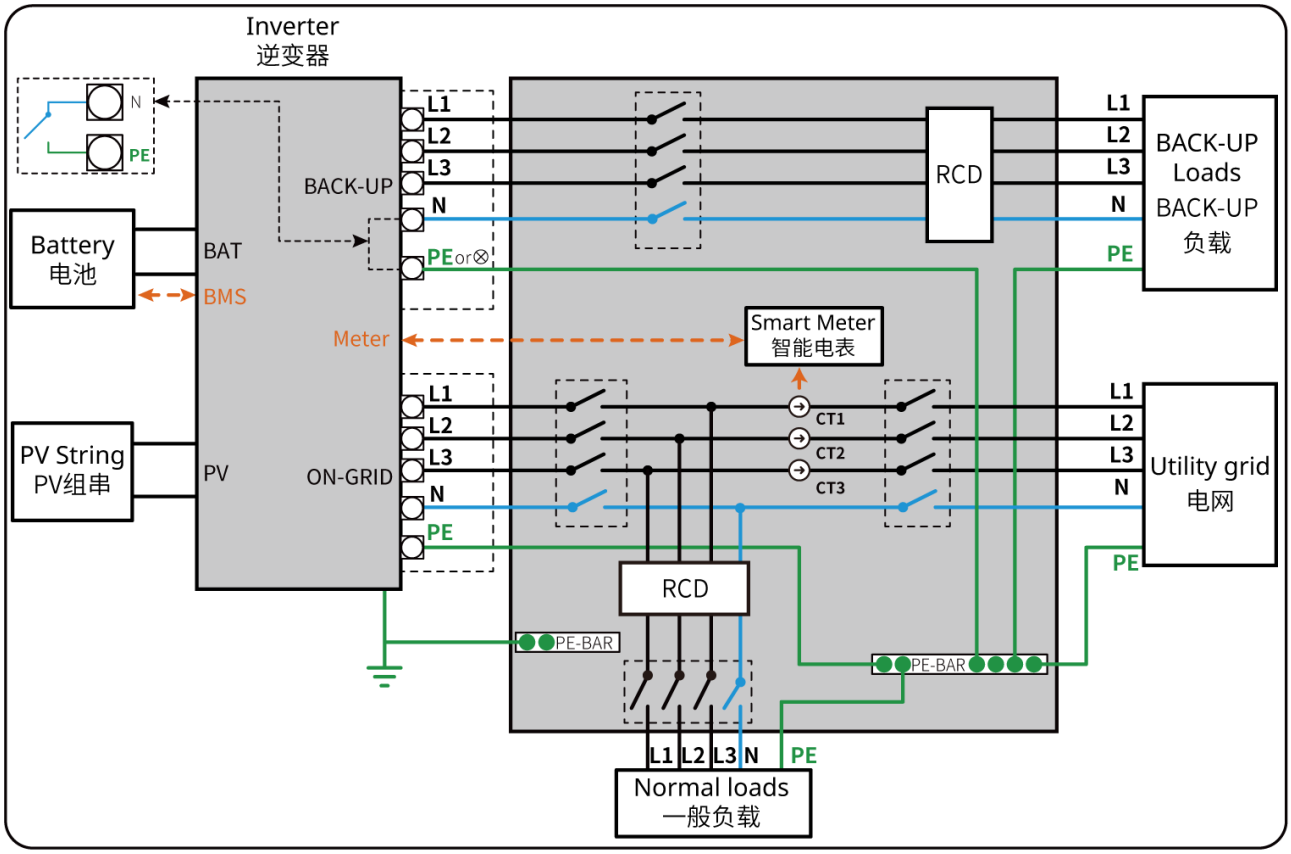

ET3010NET0016

5.2 System Wiring Detailed Diagram

When all loads in the PV system cannot consume the energy generated by the system, the surplus energy will be fed into the grid. In this case, a smart meter or CT can be used to monitor the system's Energy Generation and control the Energy Generation fed into the grid.

- Connecting a smart meter enables output power limitation and load monitoring functions.
- After connecting the smart meter, please enable the 'Grid-connected Power Limit' function through the App.

The detailed system wiring diagram only illustrates wiring for some equipment models; please refer to the corresponding wiring guidance chapter for the actual equipment used when wiring.

NOTICE

- In the coupled scenario, to implement the power generation monitoring of the grid-tied inverter and the load monitoring functions, a dual-meter network is required.
  - Meter1is used to monitor the grid-connected power of the system.
  - Meter2is used to monitor the power generation of the grid-connected inverter.
  - By integrating the data of Meter1and Meter2, the monitoring platform can achieve real-time monitoring of load power consumption.
- If the grid-connected inverter needs to perform output power limitation, please separately connect a meter orCTand other devices.

Dual-meter application scenario	
Meter1(grid side)	Meter2(AC side of grid-connected inverter)
GM3000	GM3000
GM3000	GM330
GM3000	GMK330
GM330	GM330
GM330	GM3000
GM330	GMK330
GMK330	GMK330
GMK330	GM3000
GMK330	GM330

Wiring schematic with Protection cover (Australia only)

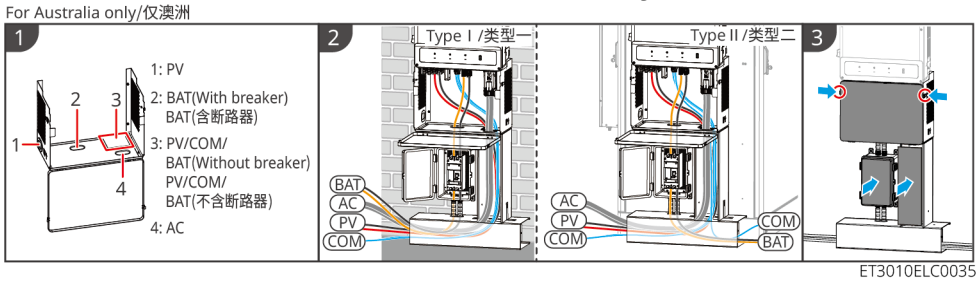

5.2.1 Detailed Wiring Diagram for Single-Unit System

General Scenario

Scenario with GM3000

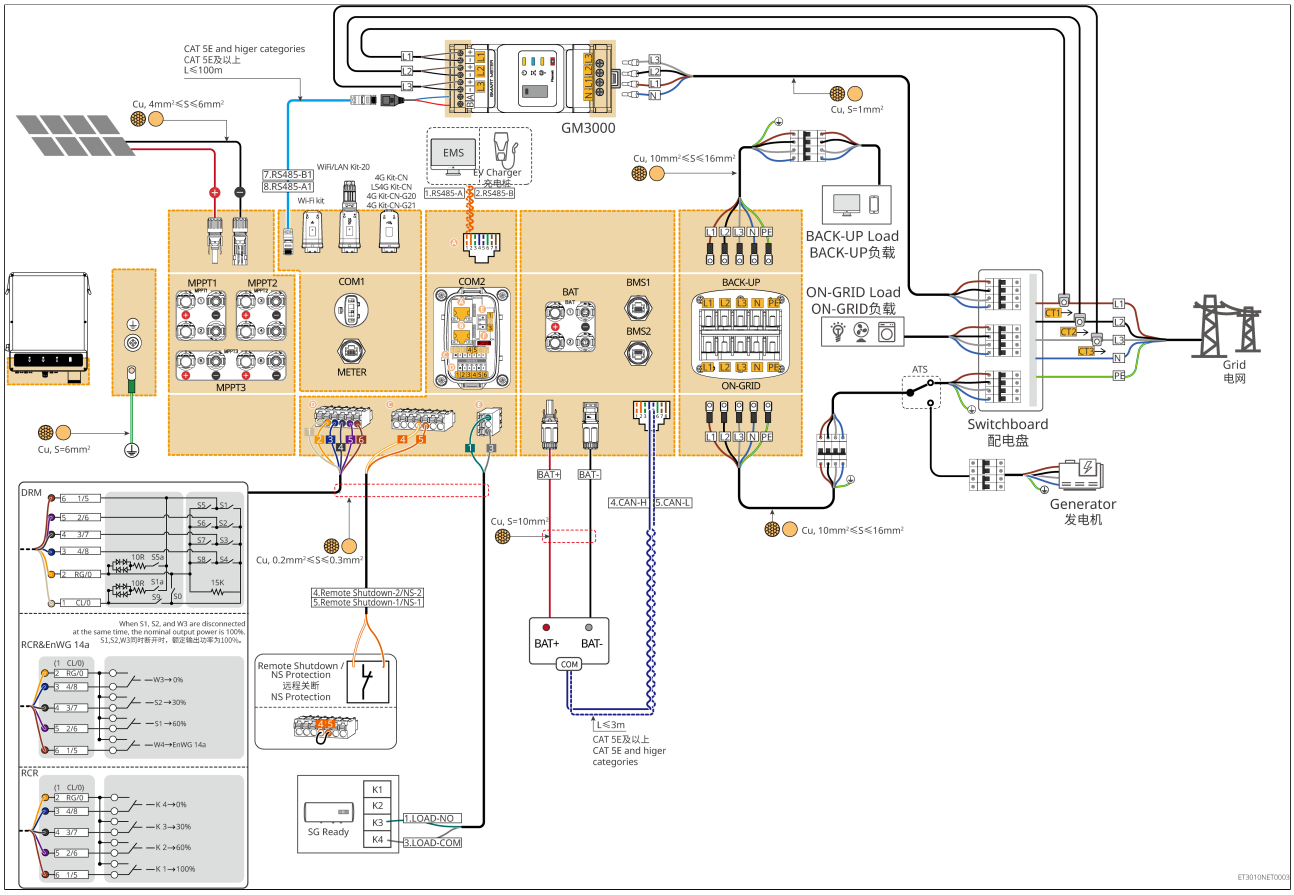

Figure14 Scenario with GM3000

Scenario with GM330

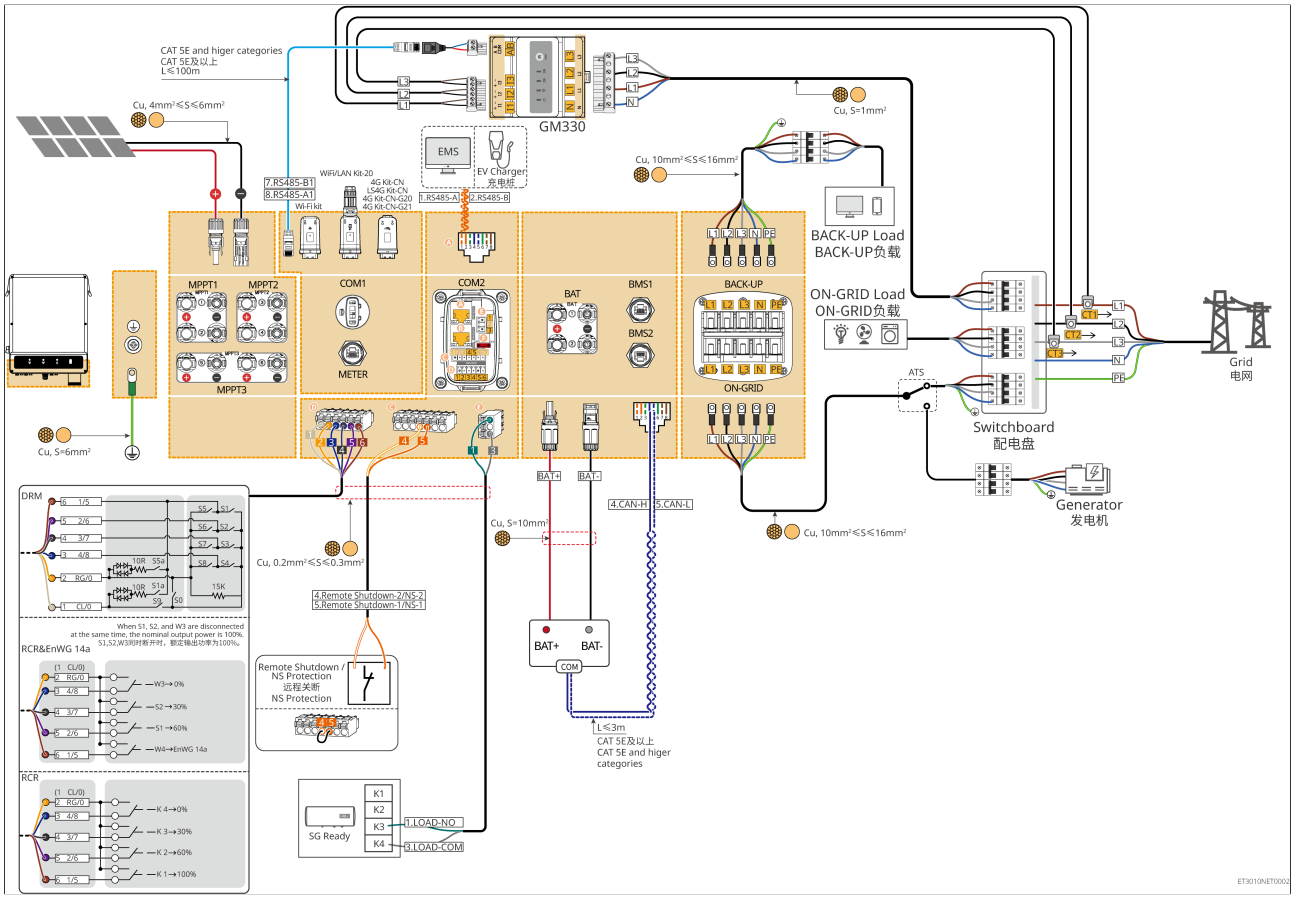

Figure15 Scenario with GM330

Scenario with GMK330

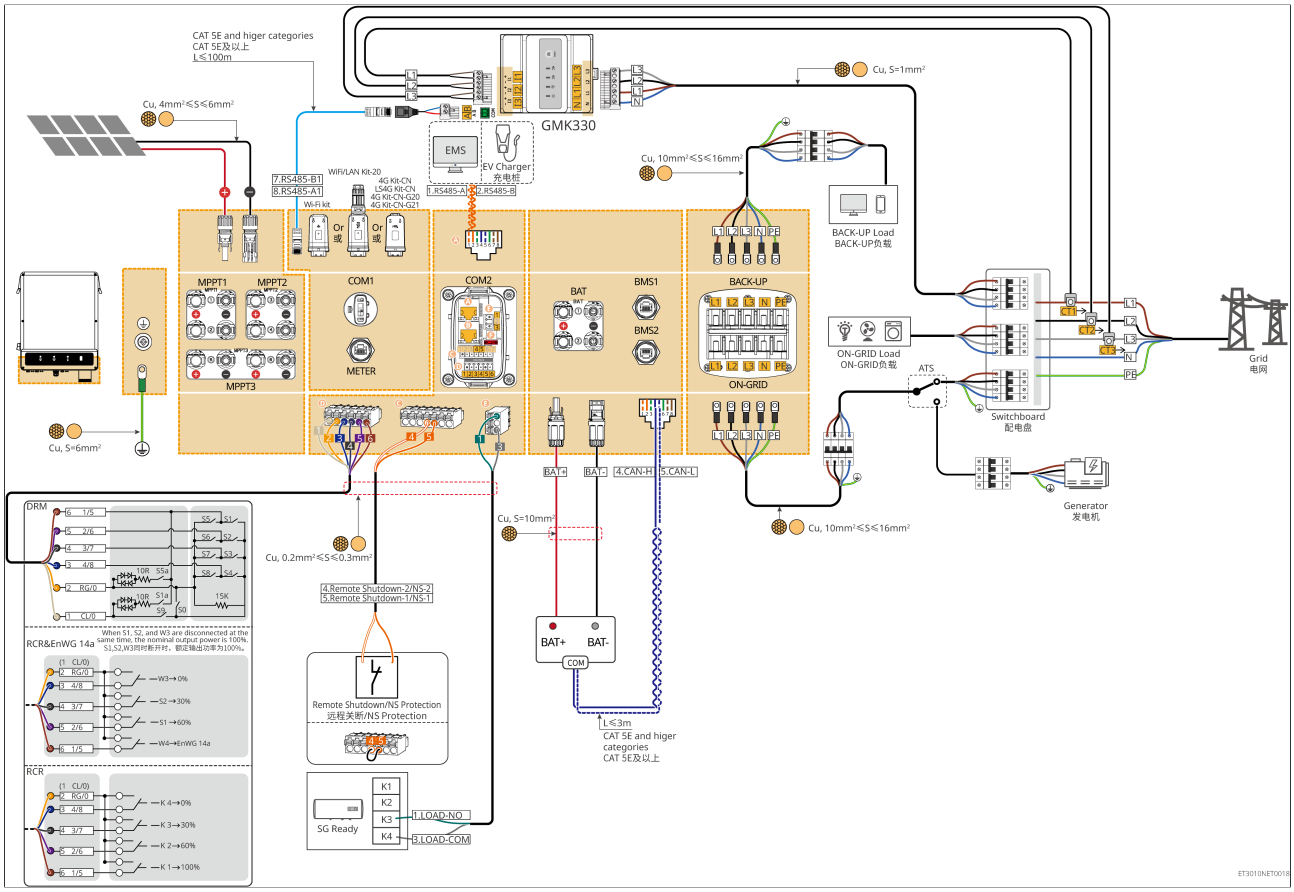

Figure16 Scenario with GMK330

Networking Solution for Load Monitoring and Grid-Tied Inverter Generation Monitoring in Coupled Scenario

In a coupled scenario, if output power limitation is required for the grid-tied inverter, connect devices such as meters or CTs separately.

GM330Meter+GM330Meter

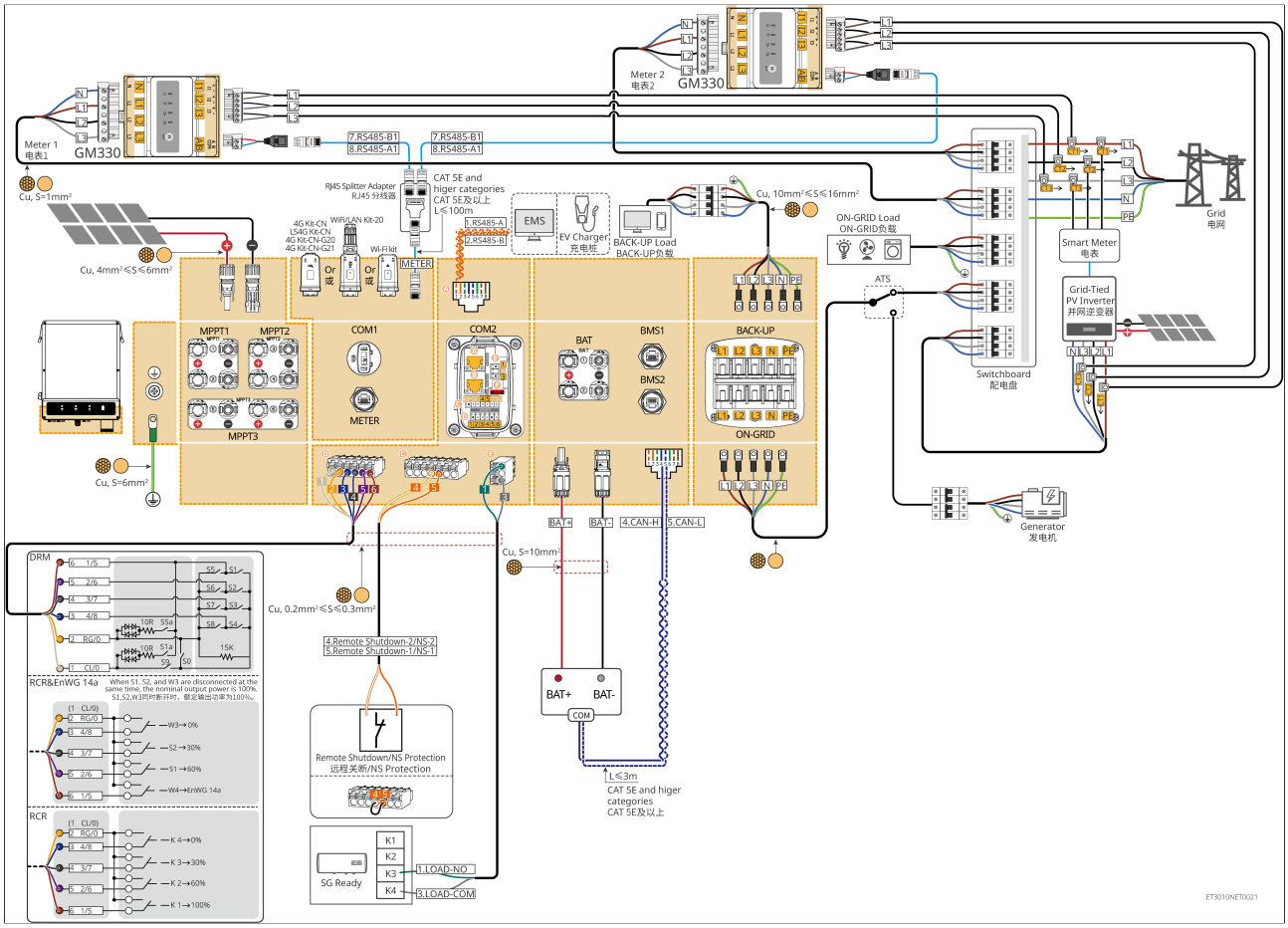

Figure17 GM330Meter+GM330Meter

GMK330Meter+GMK330Meter

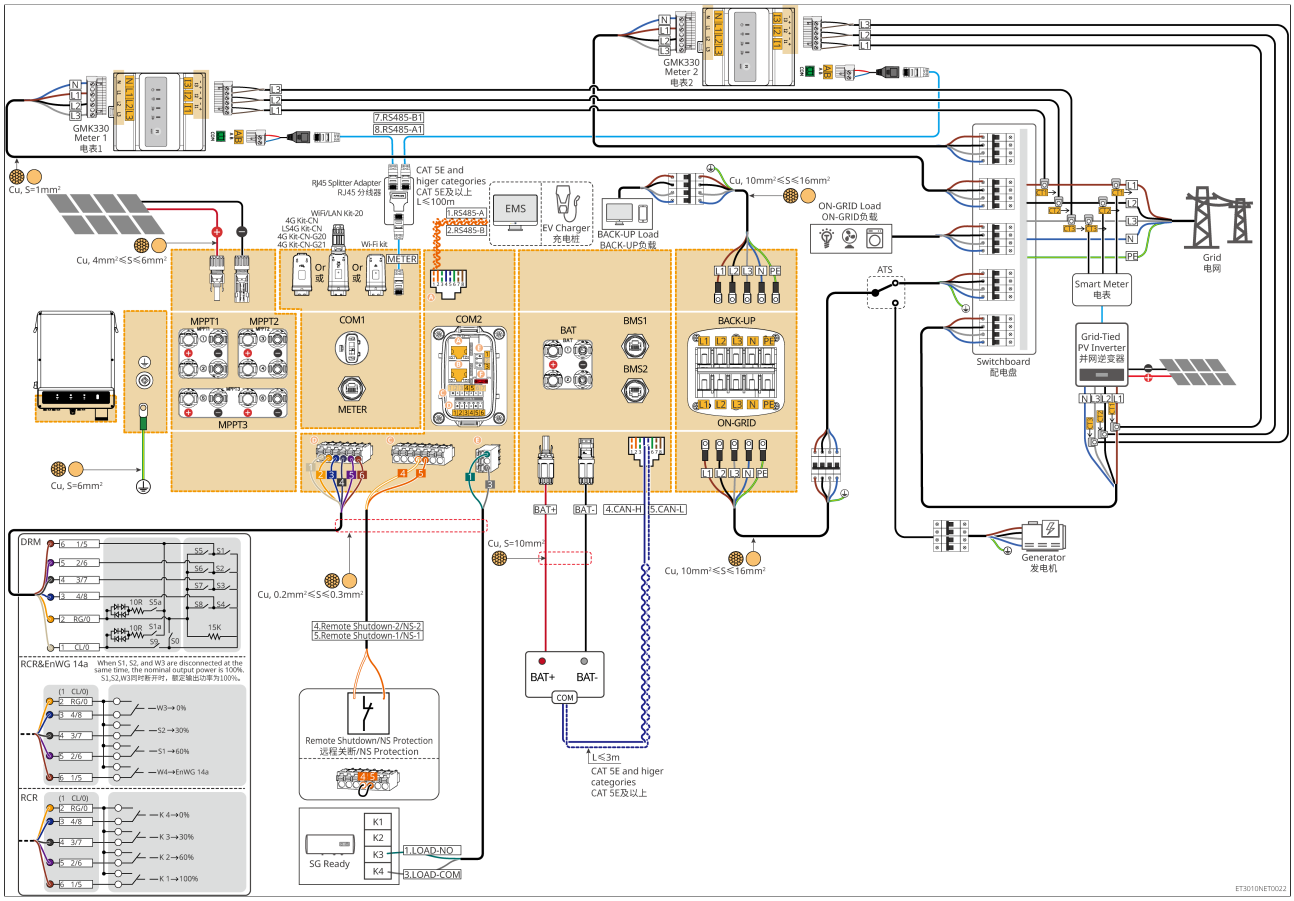

Figure18 GMK330Meter+GMK330Meter

With EzManager3000Networking Solution

EzManager3000+GM330 or GMK330Networking

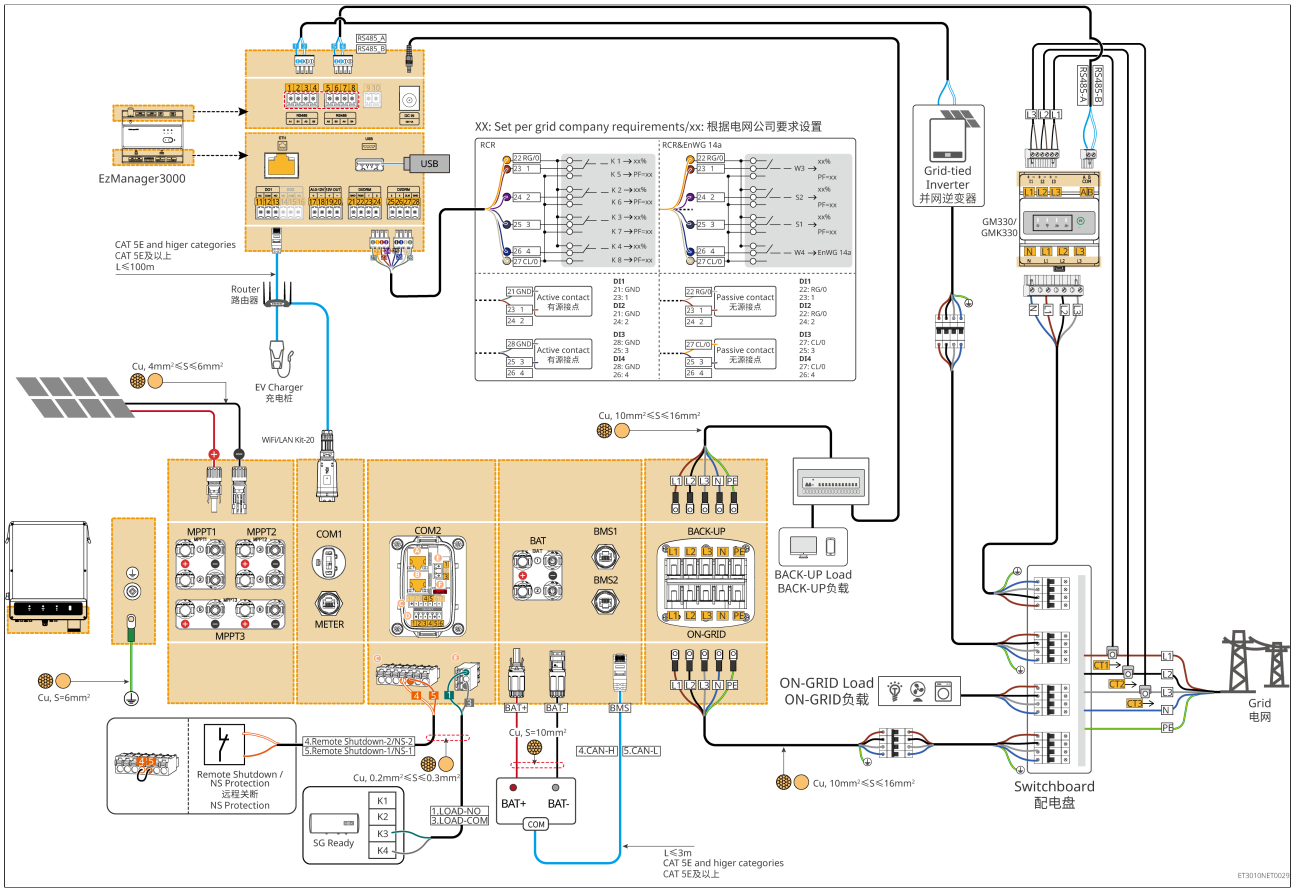

Figure19 With EzManager3000

5.2.2 Detailed Wiring Diagram for Parallel System

- In a parallel scenario, the inverter connected to theEzlink3000smart communication stick and to the meter is the master inverter; the others are slave inverters. Do not connect a smart communication stick to slave inverters in the system.
- Parallel Operation Scenarios Using EzManager3000:
  - Each inverter must be connected to the router using WiFi/LAN Kit-20, and the router must then be connected to EzManager3000.
  - If anRCRdevice in the system needs to be connected, connect it to EzManager3000; Remote Shutdown devicesNS Protection、SG Readyheat pumps need to be connected to each inverter.
- The following figures focus on the wiring related to parallel systems. For wiring requirements of other ports, refer to the single-unit system.

WithGM3000Scenario

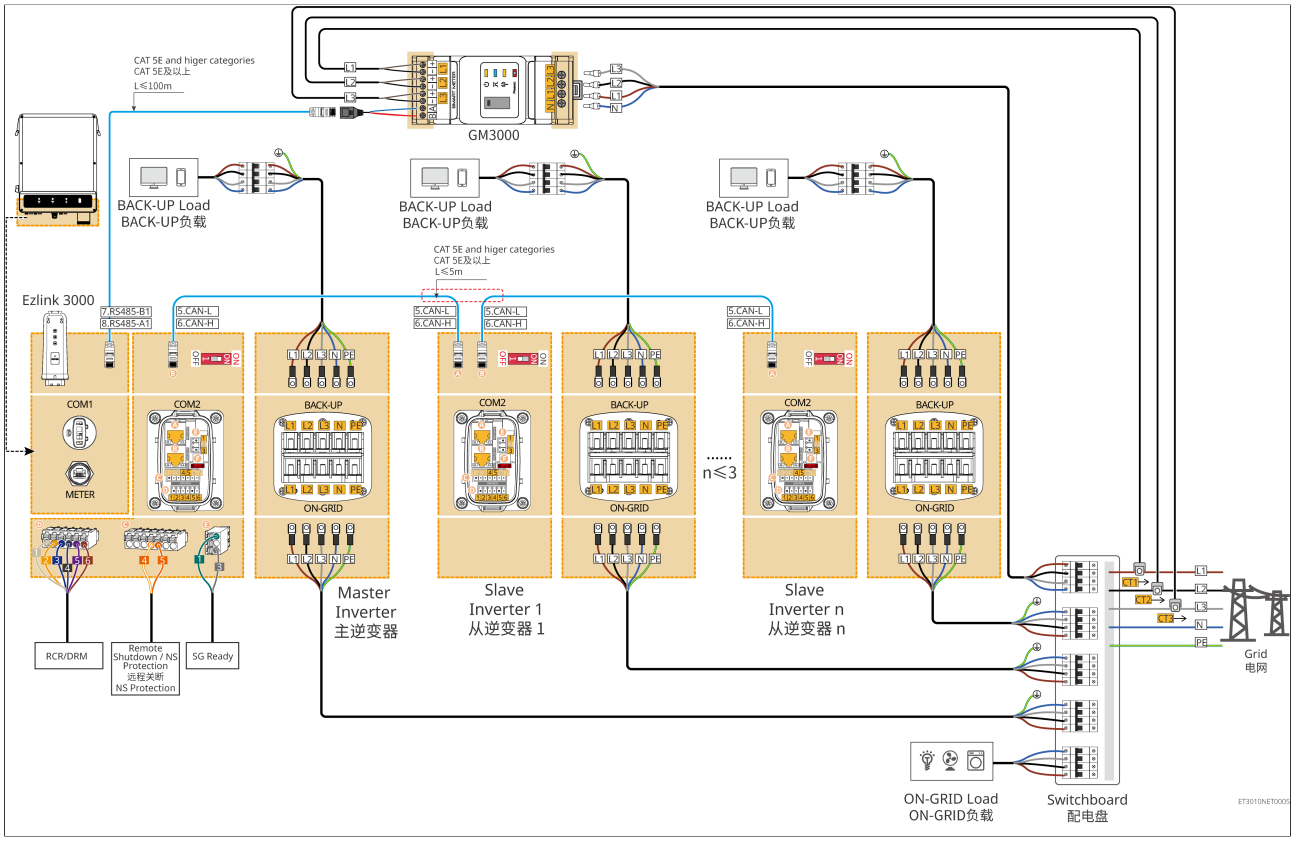

Figure20 Parallel system withGM3000

WithGM330Scenario

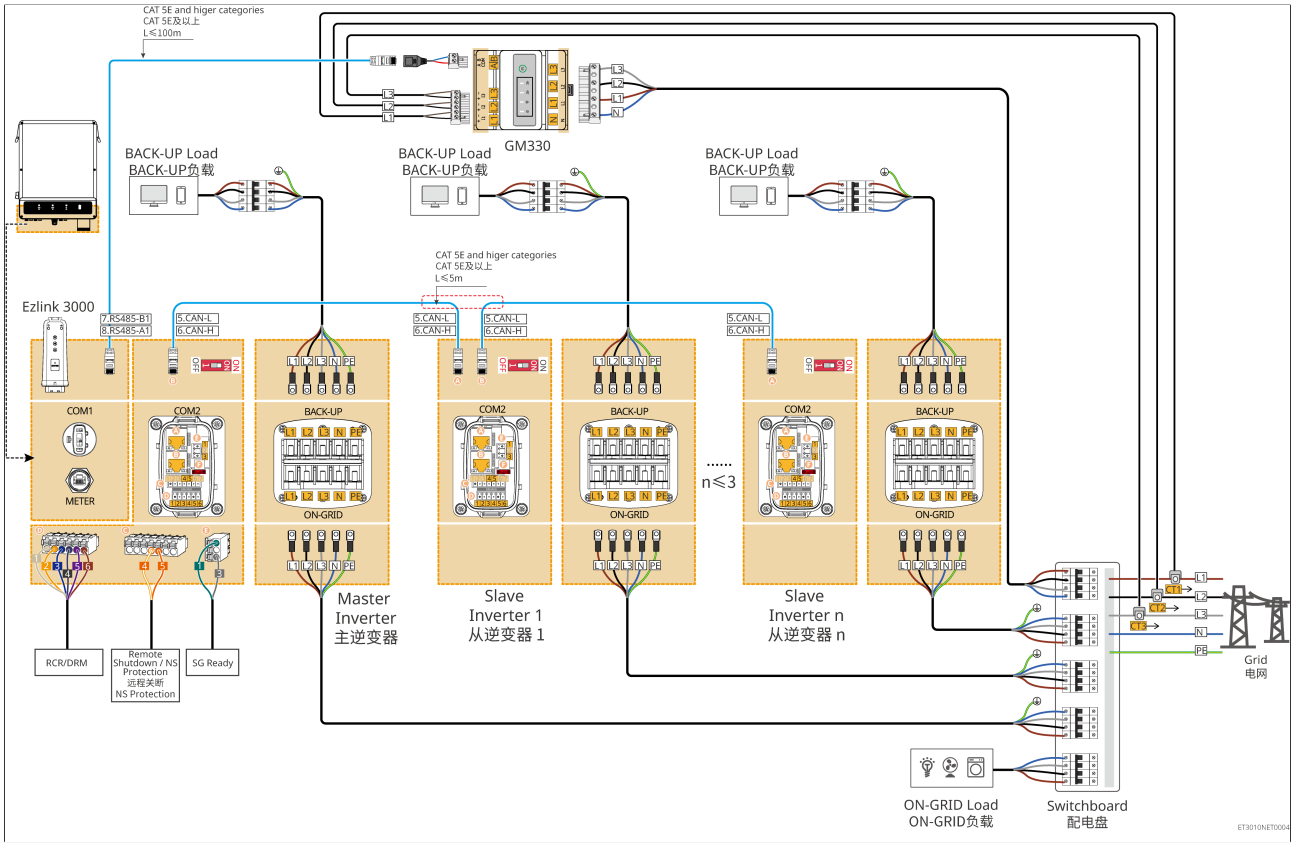

Figure21 Parallel system withGM330

WithGMK330Scenario

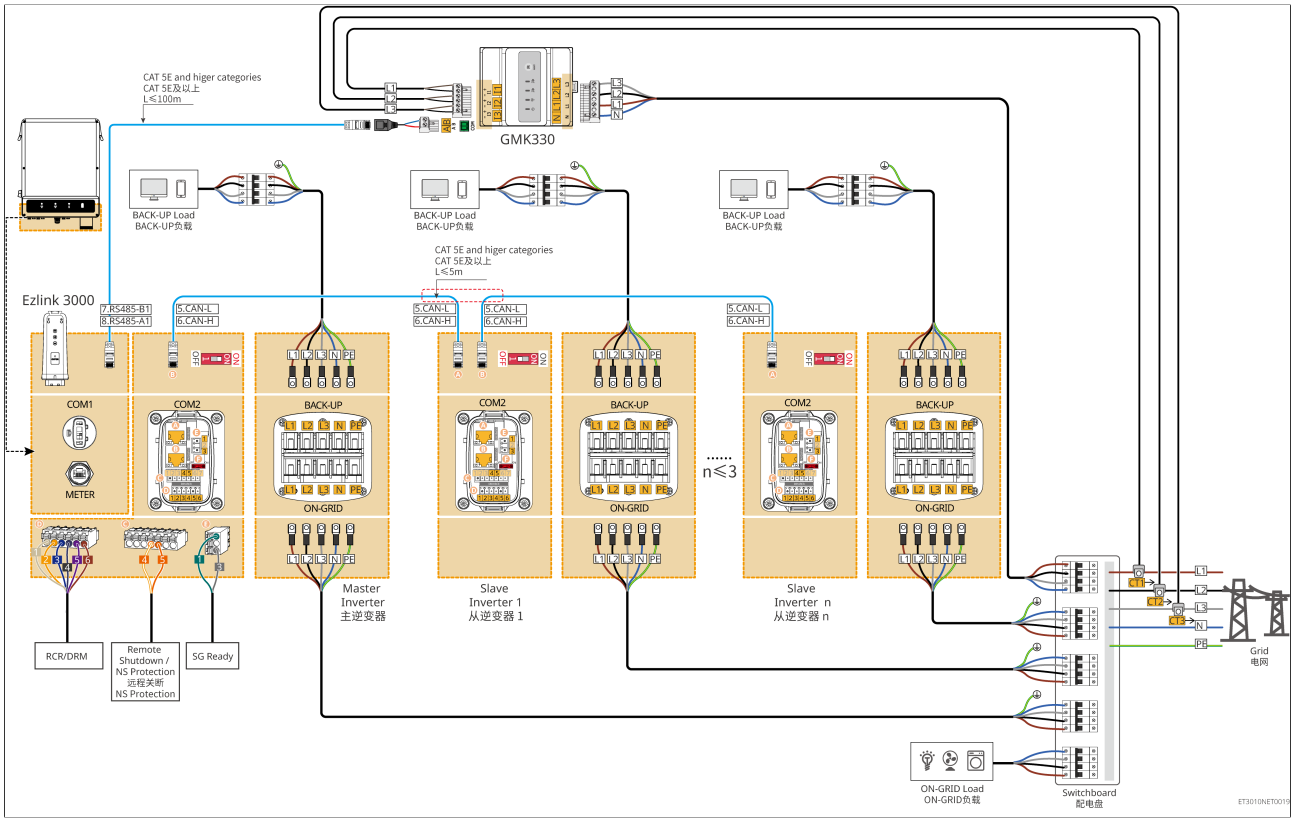

Figure22 Parallel system withGMK330

Networking Solution for Load Monitoring and Grid-Tied Inverter Generation Monitoring in Coupled Scenario

GMK330Meter+GMK330Meter

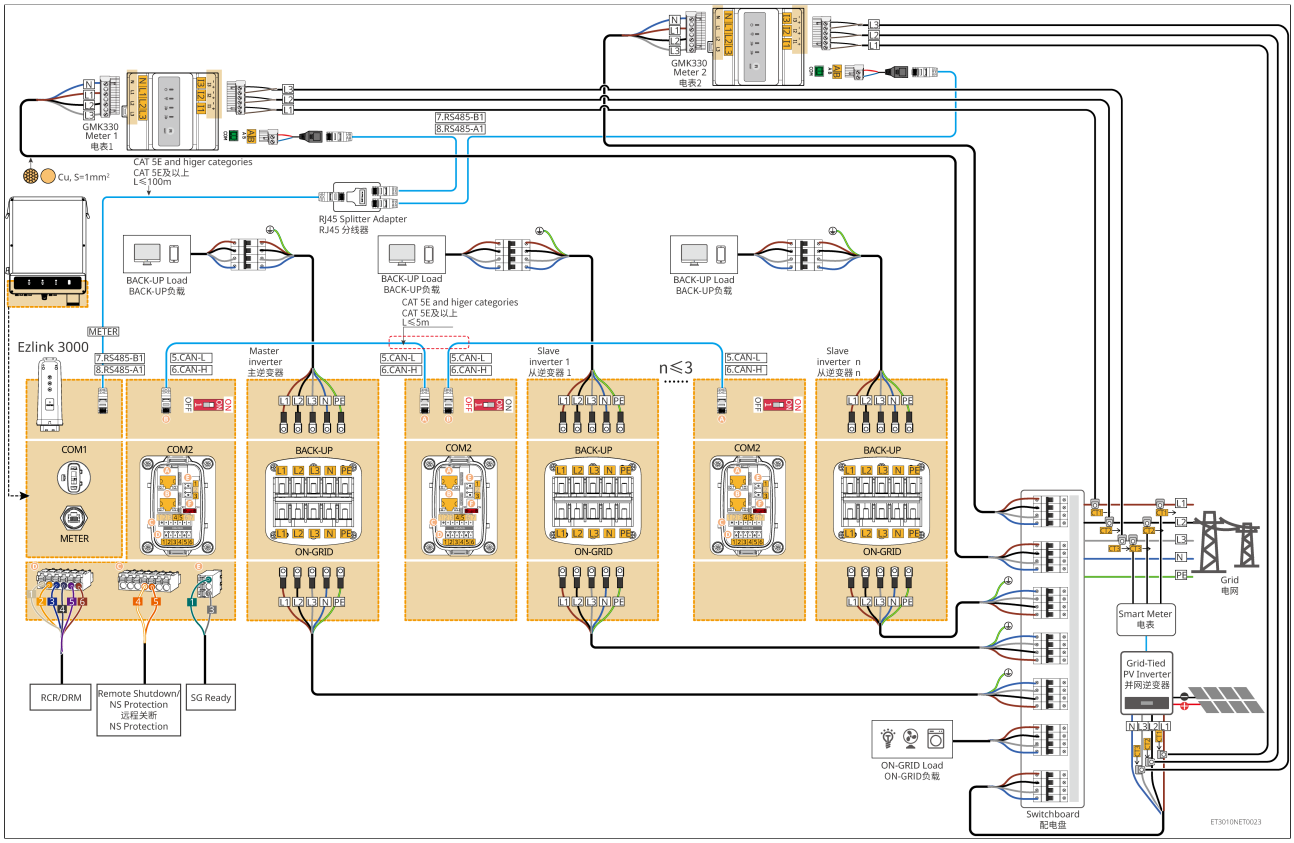

Figure23 Parallel connection with GMK330Meter+GMK330Meter

Networking solution with EzManager3000

EzManager3000+GM330 or GMK330Networking

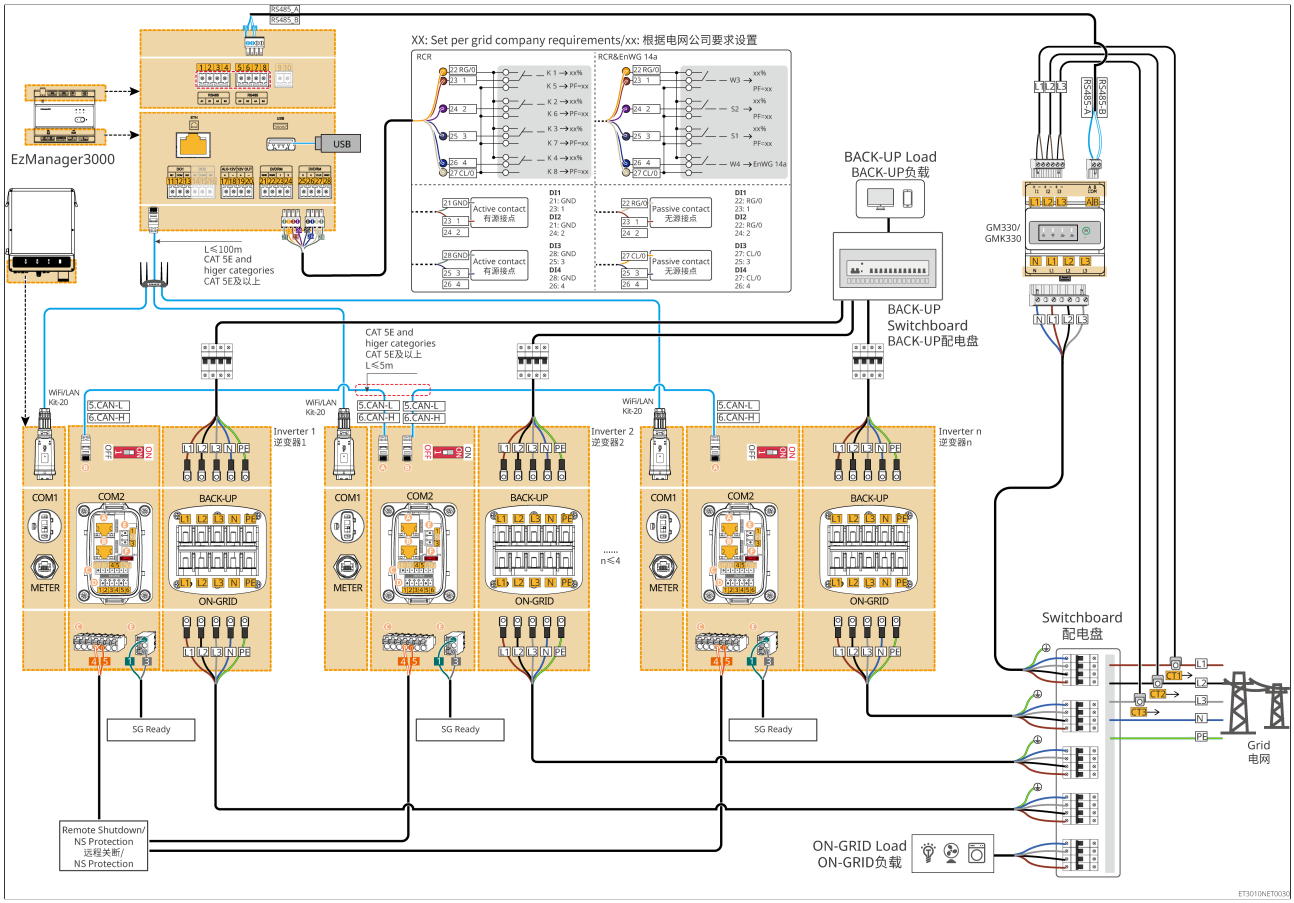

Figure24 Parallel connection with EzManager3000

5.3 Material Preparation

⚠WARNING

- It is prohibited to connect loads between the inverter and the AC Switch directly connected to the inverter.
- Each inverter must be equipped with an AC output circuit breaker; multiple inverters cannot be connected to the same AC circuit breaker at the same time.
- To ensure that the inverter can be safely disconnected from the grid under abnormal conditions, please connect an AC circuit breaker on the AC side of the inverter. Please select an appropriate AC circuit breaker according to local regulations.
- After the inverter is powered on, the BACK-UP AC port is live. If maintenance is required for BACK-UP loads, power off the inverter; otherwise, electric shock may occur.
- For cables used in the same system, it is recommended that the conductor material, cross-sectional area, and length be consistent.
  - BACK-UP AC cable for each inverter
  - ON-GRID AC cable for each inverter
  - Power cable between the inverter and the battery
  - Power cable between batteries
- The system only supports connecting a generator in single-unit scenarios via an ATS switch to enable switching between grid and generator supply.ATS switch is connected to the grid by default.

5.3.1 Switch Preparation

No.	Circuit breaker	Recommended Specifications	Acquisition Method	Remarks
1	ON-GRIDCircuit breaker	BACK-UPport: with no load, the Rated Current requirements are as follows: • GW15K-ET: Rated Current≥32A; Nominal Voltage≥400V • GW20K-ET: Rated Current≥40A; Nominal Voltage≥400V • GW25K-ET: Rated Current≥50A; Nominal Voltage≥400V • GW29.9K-ET、GW30K-ET: Rated Current≥63A; Nominal Voltage≥400V • GW12KL-ET: Rated Current≥50A; Nominal Voltage≥230V • GW18KL-ET: Rated Current≥63A; Nominal Voltage≥230V	Self-provided	If the inverter BACK-UPport is not used, select a suitable circuit breaker according to theACMax. Current to Grid.
		BACK-UPport: with load, the Rated Current requirements are as follows: • GW15K-ET: Rated Current≥50A; Nominal Voltage≥400V • GW20K-ET、GW25K-ET、GW29.9K-ET、GW30K-ET: Rated Current≥63A; Nominal Voltage≥400V • GW12KL-ET、GW18KL-ET: Rated Current≥63A; Nominal Voltage≥230V		

No.	Circuit breaker	Recommended Specifications	Acquisition Method	Remarks
2	BACK-UPCircuit breaker	Nominal Voltage≥400V, the Rated Current requirements are as follows: • GW15K-ET: Rated Current≥32A; Nominal Voltage≥400V • GW20K-ET: Rated Current≥40A; Nominal Voltage≥400V • GW25K-ET: Rated Current≥50A; Nominal Voltage≥400V • GW29.9K-ET、GW30K-ET: Rated Current≥63A; Nominal Voltage≥400V • GW12KL-ET: Rated Current≥40A; Nominal Voltage≥230V • GW18KL-ET: Rated Current≥63A; Nominal Voltage≥230V	Self-provided	-

No.	Circuit breaker	Recommended Specifications	Acquisition Method	Remarks
3	ATS Switch	For the same model, the ATS switch and ON-GRID circuit breaker have the same specifications. Specification requirements (recommended): • GW15K-ET: Rated Current≥32A; • GW20K-ET: Rated Current≥40A; • GW25K-ET: Rated Current≥50A; • GW29.9K-ET、GW30K-ET: Rated Current≥63A; • GW12KL-ET: Rated Current≥40A; • GW18KL-ET: Rated Current≥63A;	Self-provided	During actual selection, you can also select a circuit breaker that complies with local installation regulations based on the actual operating current.
4	Battery Switch	Select according to local laws and regulations • 2PDC Switch • Rated Current≥63A • Nominal Voltage≥1000V	Self-provided	-

No.	Circuit breaker	Recommended Specifications	Acquisition Method	Remarks
5	Leakage Current Protection Device	Select according to local laws and regulations • Type Atype • ON-GRIDside*1：300mA • BACK-UPside:30mA	Self-provided	-
6	Meter Switch	• Nominal Voltage:380V/400V • Rated Current:0.5A	Self-provided	-
*1: The inverter has a built-in general-purpose current-sensing residual current monitoring unit. Once a residual current exceeding the limit is detected, the inverter will immediately disconnect from the utility grid. However, if regulations mandate the installation of an external Residual Current Protection Device (RCD), it is recommended that the RCD have a residual operating current of not less than 300 mA and be a Type A RCD (for Apparent Power less than 30 kVA, 300 mA is recommended; for Apparent Power greater than 30 kVA, select according to 10 mA/kVA). Alternatively, an RCD with a residual operating current meeting the requirements may be selected in accordance with local regulations. For example, in Chile, local regulations require an RCD with a residual operating current of not more than 30 mA to be installed between the inverter and the grid for inverters of 5 kVA and below. However, note that due to PV panels, an RCD with a smaller residual operating current is more prone to nuisance tripping in harsh environments such as rainy weather.			

5.3.2 Cable Preparation

No.	Cable	Recommended Specifications	Acquisition Method
1	Inverter Protection Grounding Conductor	• Single-core outdoor copper cable • Conductor cross-sectional area:S=6mm²	Self-provided
2	Battery Protection Grounding Conductor	• Single-core outdoor copper cable • Conductor cross-sectional area:6mm²	Self-provided
3	PVDC cable	• Industry-standard outdoor PV cable • Conductor cross-sectional area:4mm²-6mm² • Cable outer diameter:5.9mm-8.8mm	Self-provided
4	Battery DC cable	Terminal TypeI 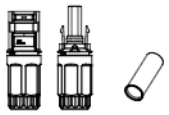 • Single-core outdoor copper cable • Conductor cross-sectional area:10mm² • Cable outer diameter:6.0mm-9.5mm	Provided by the customer or purchased from the distributor

No.	Cable	Recommended Specifications	Acquisition Method
		Terminal Type II 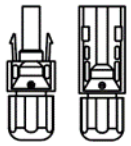 • Single-core outdoor copper cable • Conductor cross-sectional area:10mm² • Cable outer diameter:5mm-8.5mm	
5	AC cable	• Multi-core outdoor copper cable • Conductor cross-sectional area:10mm²-16mm² • Cable outer diameter:21mm-26mm	Self-provided
6	Smart meter power cable	Outdoor copper-core cable Conductor cross-sectional area:1mm²	Self-provided
7	BatteryBMScommunication cable	Custom communication cable, default length3m If self-provided, recommended:CAT 5Eor above standard network cable andRJ45connectors	Delivered with the inverter
8	MeterRS485communication cable	Standard network cable:CAT 5Eor above standard network cable andRJ45connectors	RJ45-2PINterminal adapter cable and standard network cable: supplied in the box

No.	Cable	Recommended Specifications	Acquisition Method
9	Battery cluster parallel communication cable	CAT 5Eor above standard network cable andRJ45connectors	Self-provided
10	Load controlDOcommunication cable	• Shielded cable compliant with local standards • Conductor cross-sectional area:0.2mm²-0.3mm² • Cable outer diameter:5mm-8mm	Self-provided
11	Remote Shutdown communication cable		Self-provided
12	RCR/DREDsignal cable		Self-provided
13	Inverter parallel communication cable	CAT 5Eor above standard network cable andRJ45connectors	Self-provided
14	EMScommunication cable/EV charger communication cable	CAT 5Eor above standard network cable andRJ45connectors	Self-provided
15	12Vexternal power supply	• Outdoor copper-core cable • Conductor cross-sectional area:0.2mm²-0.3mm² • Cable outer diameter:5mm-8mm	Self-provided

5.4 Connect the Protection Ground Cable

⚠WARNING

- The Protection grounding of the chassis enclosure cannot replace the Protection ground cable of the AC output port. When wiring, ensure that the Protection ground cables at both locations are reliably connected.
- To improve the corrosion resistance of the terminals, it is recommended to apply silicone gel or paint to the outside of the grounding terminal for protection after the Protection ground cable is connected and installed.
- When installing the device, the Protection ground cable must be installed first; when removing the device, the Protection ground cable must be removed last.

5.4.1 Inverter Grounding

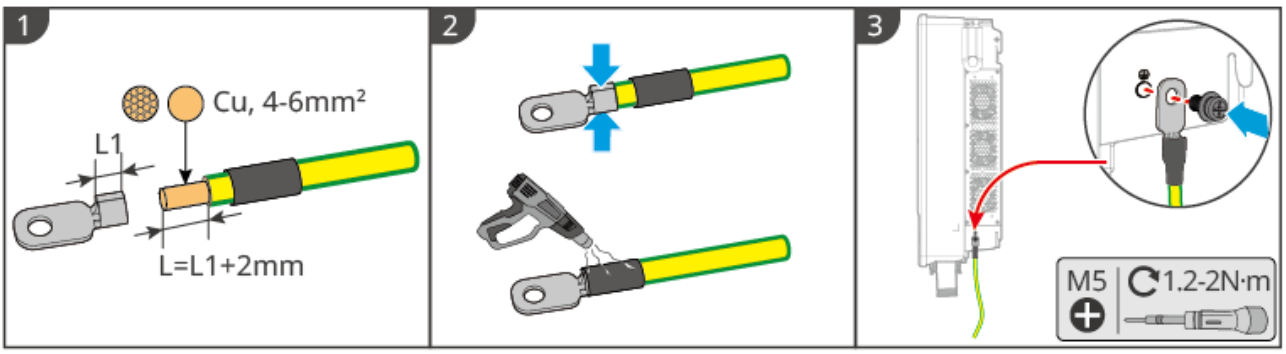

ET3010ELC0001

5.4.2 Battery System Grounding

NOTICE

The pull-out force after crimping shall be greater than400N。

Lynx Home Fseries

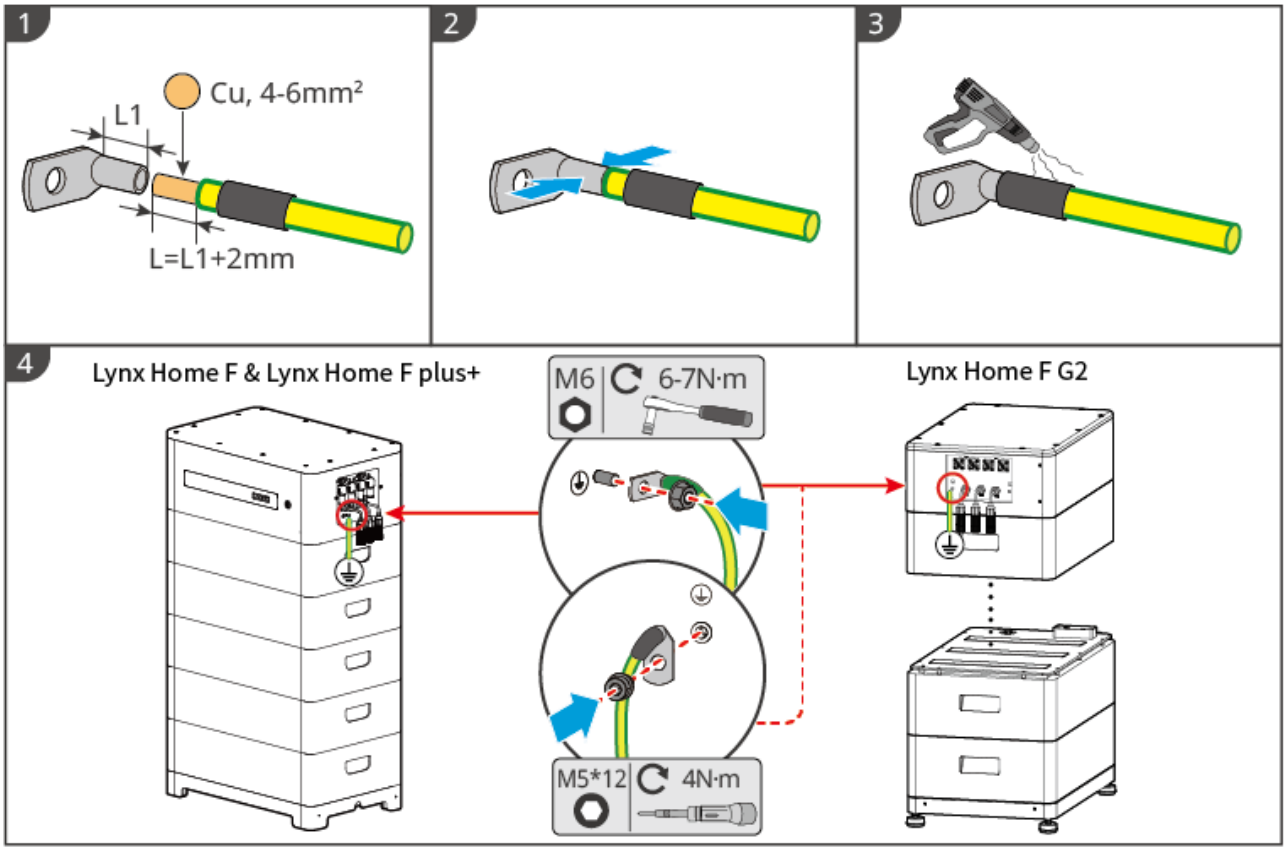

Lynx Home D

In a battery system, any one grounding point can be selected for grounding.

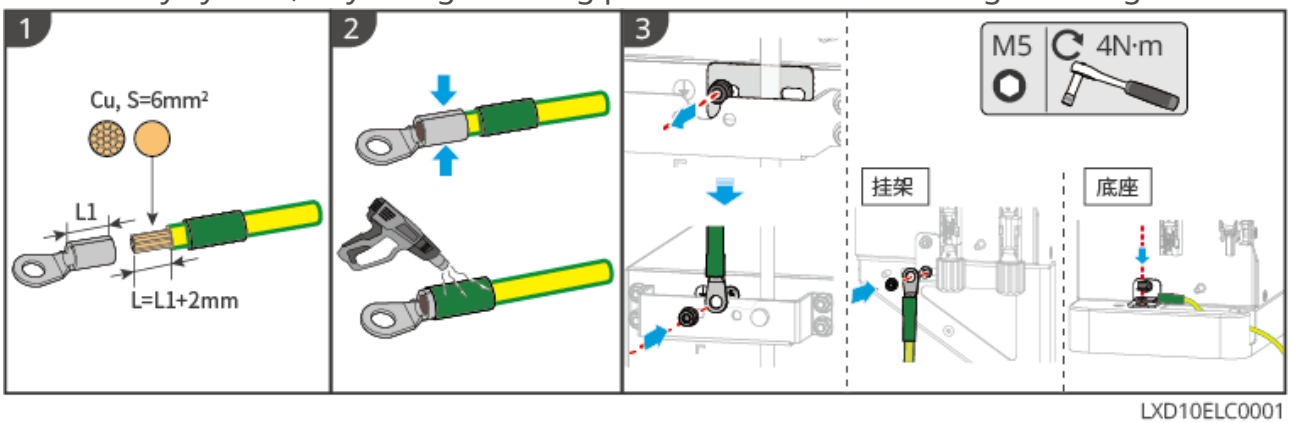

Lynx D G2

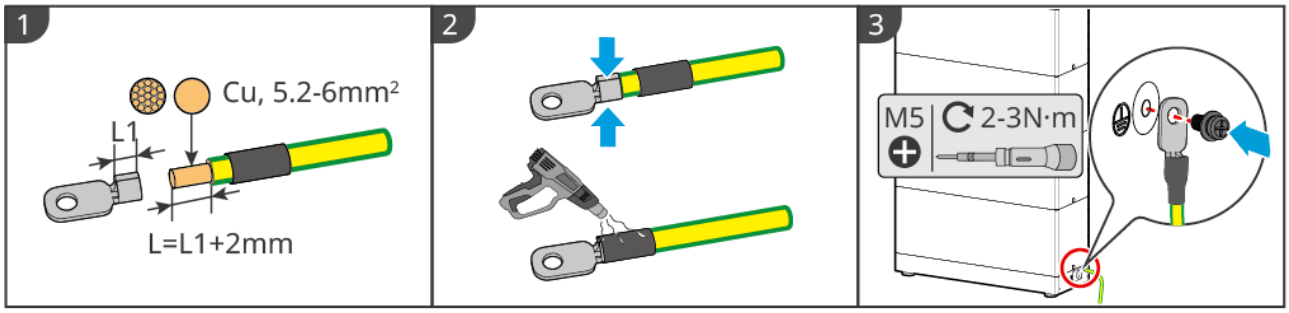

BAT20ELC0003

5.5 Connect PV Cables

⚠DANGER

- Do not connect the same PV string to multiple inverters; otherwise, inverter damage may occur.
- Before connecting the PV strings to the inverter, verify the following information. Failure to do so may cause permanent damage to the inverter and, in severe cases, may cause a fire, resulting in personal injury and property loss.
  1. Please ensure that the Max. MPPT Short Circuit Current and Max. Input Voltage of each MPPT are within the allowable range of the inverter.
  2. Please ensure that the positive pole of the PV string is connected to PV+ of the inverter, and the negative pole of the PV string is connected to PV- of the inverter.

⚠WARNING

- The PV string output does not support grounding. Before connecting the PV strings to the inverter, ensure that the minimum insulation resistance to ground of the PV strings meets the minimum insulation impedance requirement (R = Max. Input Voltage/30 mA).
- After completing the DC cable connection, ensure that the cables are securely connected and not loose.
- Use a multimeter to measure the positive and negative poles of the DC cables, ensuring that the polarity is correct and no reverse connection occurs; and that the voltage is within the permitted range.

NOTICE

The two PV strings in each MPPT must use the same model, the same number of PV modules, and the same tilt angle and azimuth angle to maximize Efficiency.

Type 1:

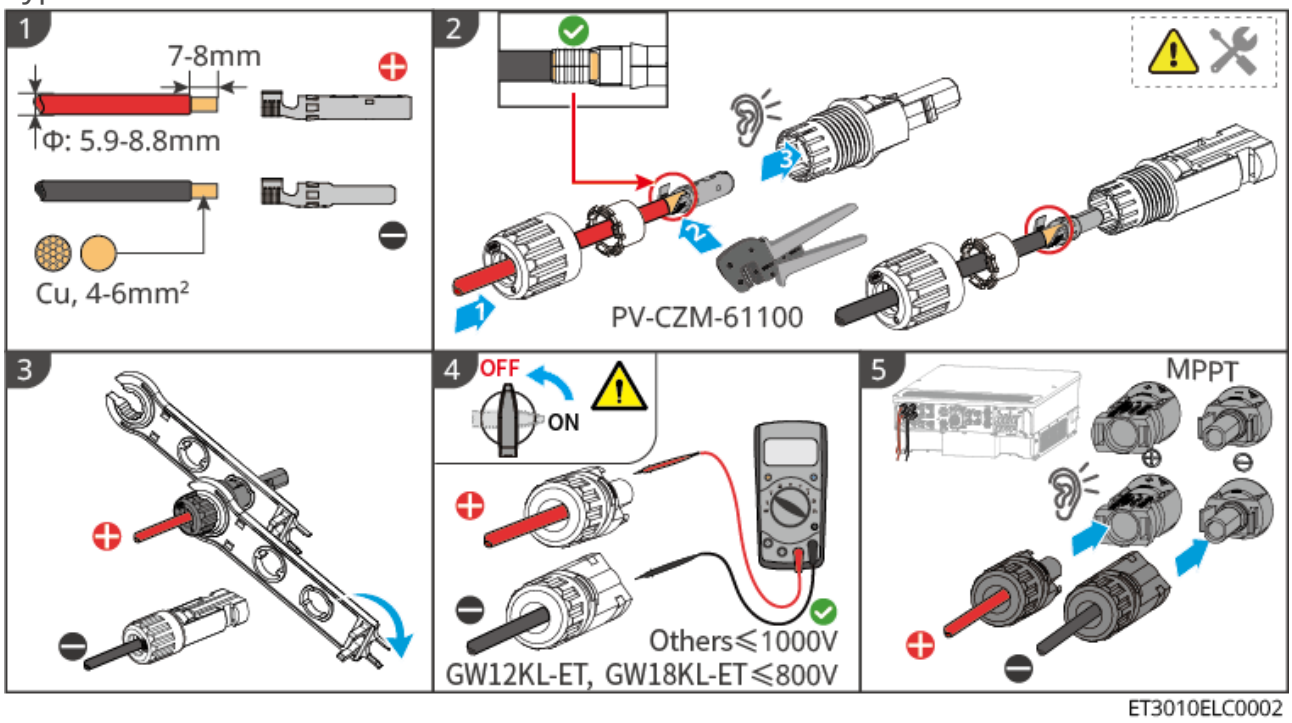

ET3010ELC0002

Type 2:

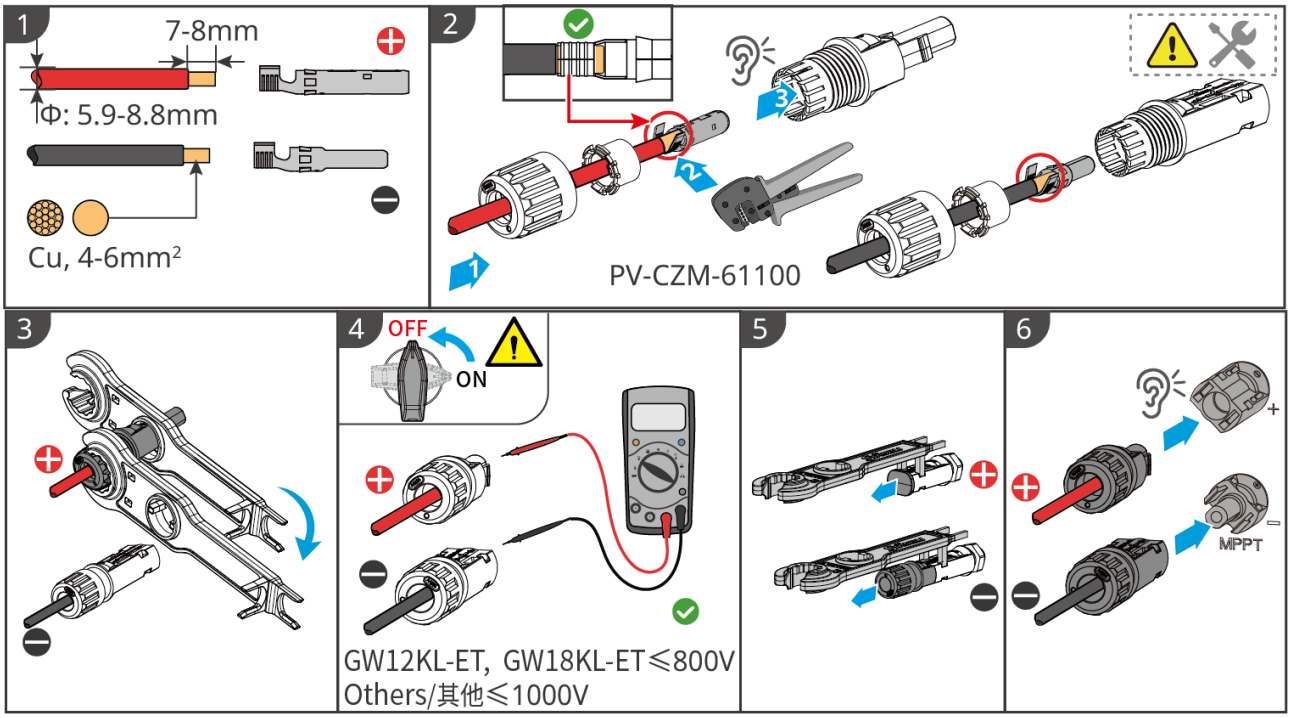

ET3010ELC0041

5.6 Connect AC Cables

WARNING

- The inverter integrates a Residual Current Monitoring Unit (RCMU) internally to prevent residual current from exceeding the specified value. When the inverter detects a leakage current greater than the permitted value, it will quickly disconnect from the grid or generator.
- Each inverter must be equipped with an AC output circuit breaker; multiple inverters cannot be connected to the same AC circuit breaker at the same time.
- To ensure that the inverter can be safely disconnected from the grid under abnormal conditions, please connect an AC circuit breaker on the AC side of the inverter. Please select an appropriate AC circuit breaker according to local regulations.
- After the inverter is powered on, theBACK-UPAC port is live. If maintenance is required forBACK-UPloads, power off the inverter; otherwise, electric shock may result.
- When wiring, ensure that the AC cables fully match the AC terminal ports“L1”、“L2”、“L3”、“N”、“PE”ports; incorrect cable connection will cause equipment damage.
- Ensure that the conductor core is fully inserted into the terminal wiring hole and is not exposed.
- Ensure that the insulation board at the AC terminal is securely clamped and not loose.
- Ensure that the cables are securely connected; otherwise, the terminal block may overheat during equipment operation, causing equipment damage.
- According to local regulations, an externalAtypeRCDcan be installed for the inverter. Recommended specifications:ON-GRIDside:300mA, BACK-UPside:30mA。
- Standalone inverter operation supports generator connection. During a Grid Power Outage, theON-GRIDport can supply power to the energy storage system.

Type 1:

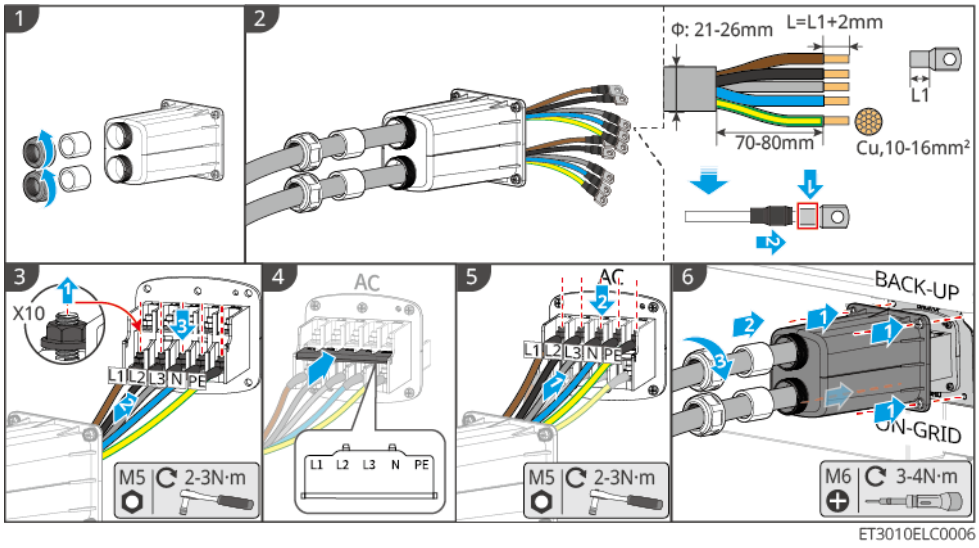

ET3010ELC0006

Type 2:

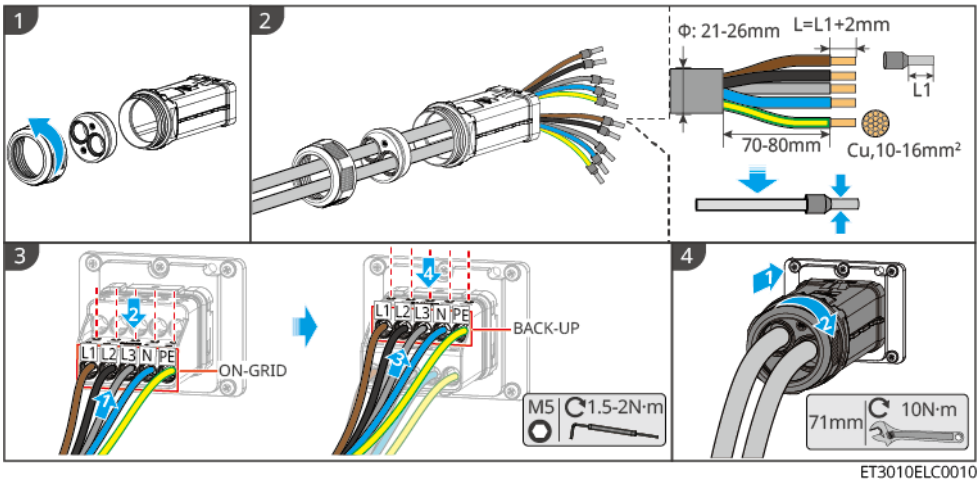

ET3010ELC0010

5.7 Connecting the Battery Cables

⚠DANGER

- Do not connect the same Battery BANK to multiple inverters; otherwise, the inverter may be damaged.
- Do not connect loads between the inverter and the battery.
- When connecting the battery cables, use insulated tools to prevent accidental electric shock or Battery Short Circuit.
- Ensure that the battery open-circuit voltage is within the inverter's permitted range.
- Between the inverter and the battery, decide whether to configure a DC Switch in accordance with local laws and regulations.

NOTICE

When usingLynx Home Dbatteries:

- Select the appropriate cable crimp terminals according to the actually connected equipment.
- Use an appropriate hydraulic crimping tool according to the DC Connector model. Recommended specifications:
  - For the battery DC terminals, if the self-sealing bag in the crimping delivery package does not have theHD Locking terminallabel, it is recommended to use theYQK-70hydraulic crimping tool.
  - For the battery DC terminals, if the self-sealing bag in the crimping delivery package has theHD Locking terminallabel, it is recommended to use theVXC9hydraulic crimping tool.
  - If a hydraulic crimping tool cannot be purchased，select a crimping tool by yourself according to the terminal crimping dimensions，and ensure that the terminal crimping meets the application requirements.
- Use the DC Connector and wiring terminals supplied with the box to connect the power cables:
  - If the black power cable of the battery system has aHDlabel or white number tube, mate it with the connector whose self-sealing bag in the delivery package has theHD Locking terminallabel.
  - If the black power cable of the battery system does not have aHDlabel or white number tube, check whether the self-sealing bag containing the power connectors in the delivery package has theHD Locking terminallabel. If not, mate the male and female connectors with each other; if it has theHD Locking terminallabel, contact the dealer or after-sales service.

GW18KL-ET、GW25K-ET、GW29.9K-ET、GW30K-ETmodel inverters have two battery input ports. When battery systems are connected to the inverter in parallel clusters, the number of battery systems connected to each port is as follows:

Number of battery systems	BAT1 Number of connected battery systems	BAT2 Number of connected battery systems
1	1	0
2	1	1

Number of battery systems	BAT1 Number of connected battery systems	BAT2 Number of connected battery systems
3	2	1
4	2	2
.....	.....	.....
15	8	7
16	8	8

Description of communication connection between the inverter and theLynx Home Fseries batteries forBMScommunication:

Inverter port	Connected to battery port	Port definition	Description
BMS1 / BMS2	COM1/COM2/COM	4：CAN_H 5：CAN_L	• The inverter and the battery useCANcommunication • InverterBMS1port is connected to the battery'sCOM1port • If the battery charge/discharge current is >50A, it is recommended to connect to the battery'sBAT1andBAT2ports; connect the inverter'sBMS1port is connected to the battery'sCOM1port

Lynx Home F Communication port definition:

PIN	COM	Description
4	CAN_H	Connect to the inverterBMScommunication port to communicate with the inverter; or a termination resistor.
5	CAN_L	
1、2、3、6、7、8	-	-

Lynx Home F Plus+battery parallel-cluster communication connection instructions:

PIN	COM1	COM2	COM3	Description
1	CAN_H	CAN_H	CAN_H	Battery system parallel-clusterBMScommunication
2	CAN_L	CAN_L	CAN_L	
3	-	-	-	Reserved
4	CAN_H	-	-	• COM1: Connect to the inverterBMScommunication port to communicate with the inverter • COM2，COM3: Reserved
5	CAN_L	-	-	
6	GND	GND	GND	GroundingPINPin
7	HVIL_IN	HVIL_IN	-	• COM1，COM2: Parallel-cluster interlock function • COM3: Reserved
8	HVIL_OUT	HVIL_OUT	-	

Lynx Home F G2battery parallel-cluster communication connection instructions:

PIN	COM1	COM2	COM3	Description
1	RS485_A1	RS485_A1	Reserved	Connect to an externalRS485communication device
2	RS485_B1	RS485_B1		
3	-	-		Reserved
4	CAN_H	CAN_H		Connect to the inverter communication or battery parallel-cluster communication port
5	CAN_L	CAN_L		
6	DI7H-	DI7H-		Battery parallel-cluster signal detection function
7	DI7H+	DI7H+		
8	-	PWM		Send parallel-clusterPWMsignal

Description of communication connection between the inverter and theLynx Home DbatteryBMScommunication connection instructions

Inverter port	Connected to battery port	Port definition	Description
BMS1	COM	4：CAN_H 5：CAN_L	• The inverter and the battery useCANcommunication • InverterBMS1port to the battery communication port

Lynx Home Dbattery parallel-cluster communication connection instructions:

PIN	Battery port	Description
1	RS485_A1	Reserved
2	RS485_B1	
4	CAN_H	Connect to the inverter communication or battery parallel-cluster communication port
5	CAN_L	
3、6、7、8	-	-

Description of communication connection between the inverter and theLynx D G2batteryBMScommunication connection instructions

Inverter port	Connected to battery port	Port definition	Description
BMS1/BMS2	COM	4：CAN_H 5：CAN_L	• The inverter and the battery useCANcommunication • InverterBMS1/BMS2port to the battery communication port

Lynx D G2 battery parallel-cluster communication connection instructions

PIN	Battery port	Description
1	RS485_A1	Reserved
2	RS485_B1	
3	12V	Wake-up signal from the inverter to the battery
4	CAN_H	

PIN	Battery port	Description
5	CAN_L	Connect to the inverter communication or battery parallel-cluster communication port
6	GND	Wake-up signal from the inverter to the battery
7	CAN_H	DCDC CAN communication port
8	CAN_L	

Battery system wiring diagram

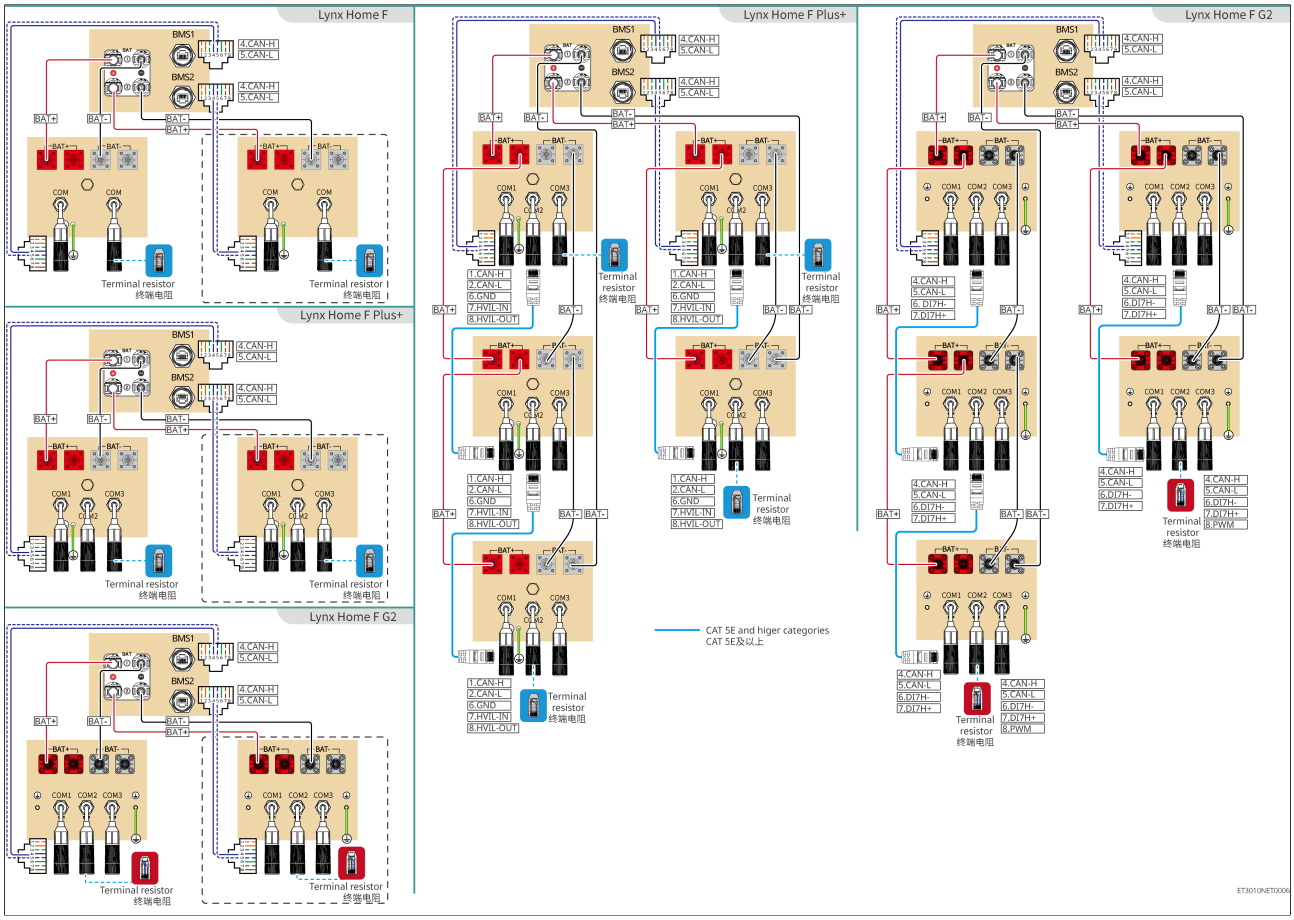

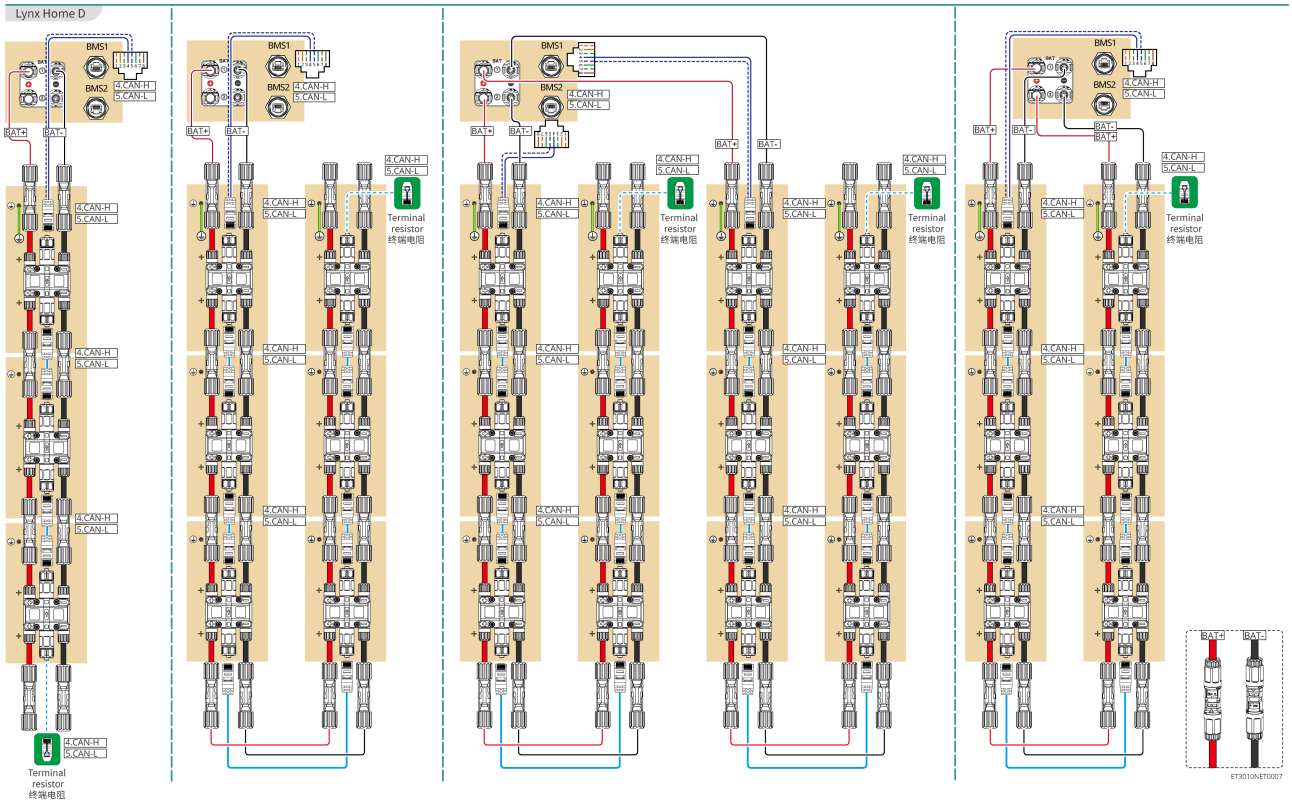

Lynx D G2

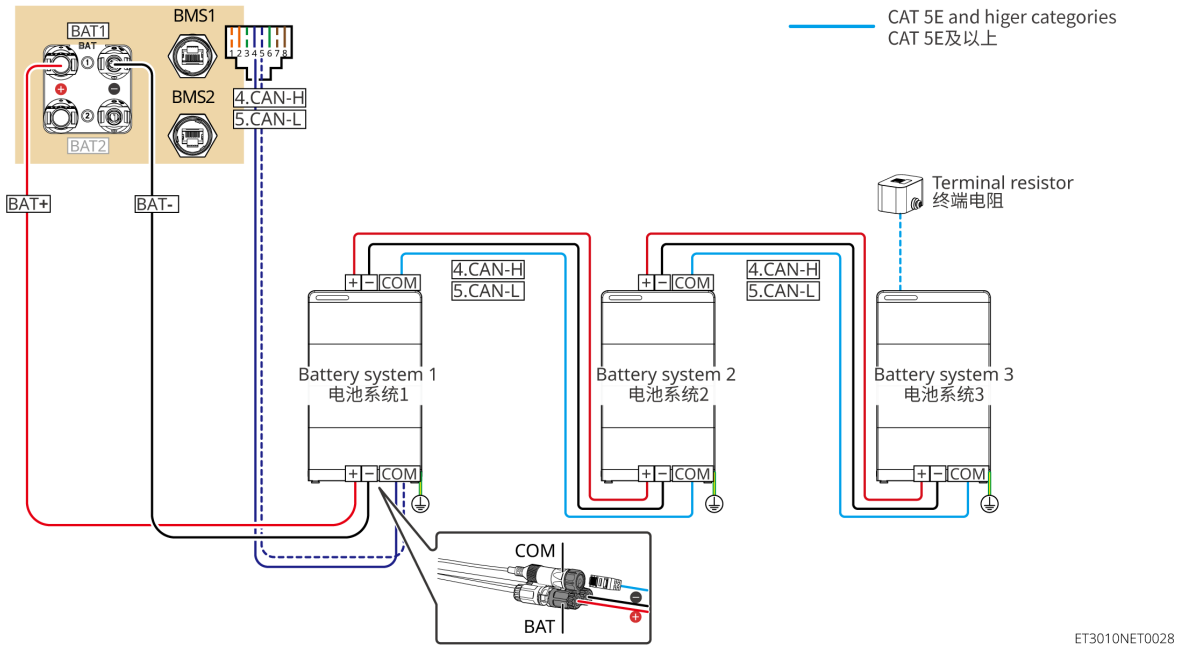

5.7.1 Connect the Inverter and Battery Power Cables

⚠WARNING

- Use a multimeter to measure the positive and negative poles of the DC cables, ensuring that the polarity is correct and no reverse connection occurs; and that the voltage is within the permitted range.
- During wiring, the battery cables must exactly match the "BAT+", "BAT-", and grounding ports of the battery terminals; incorrect cable connection will cause equipment damage.
- Ensure that the conductor is fully inserted into the terminal wiring hole and no bare conductor is exposed.
- Ensure that the cables are securely connected; otherwise, the terminals may overheat during equipment operation and cause equipment damage.
- Do not connect the same Battery BANK to multiple inverters; otherwise, the inverter may be damaged.

Overview of inverter and battery power cables

Inverter+ Lynx Home Fseries battery

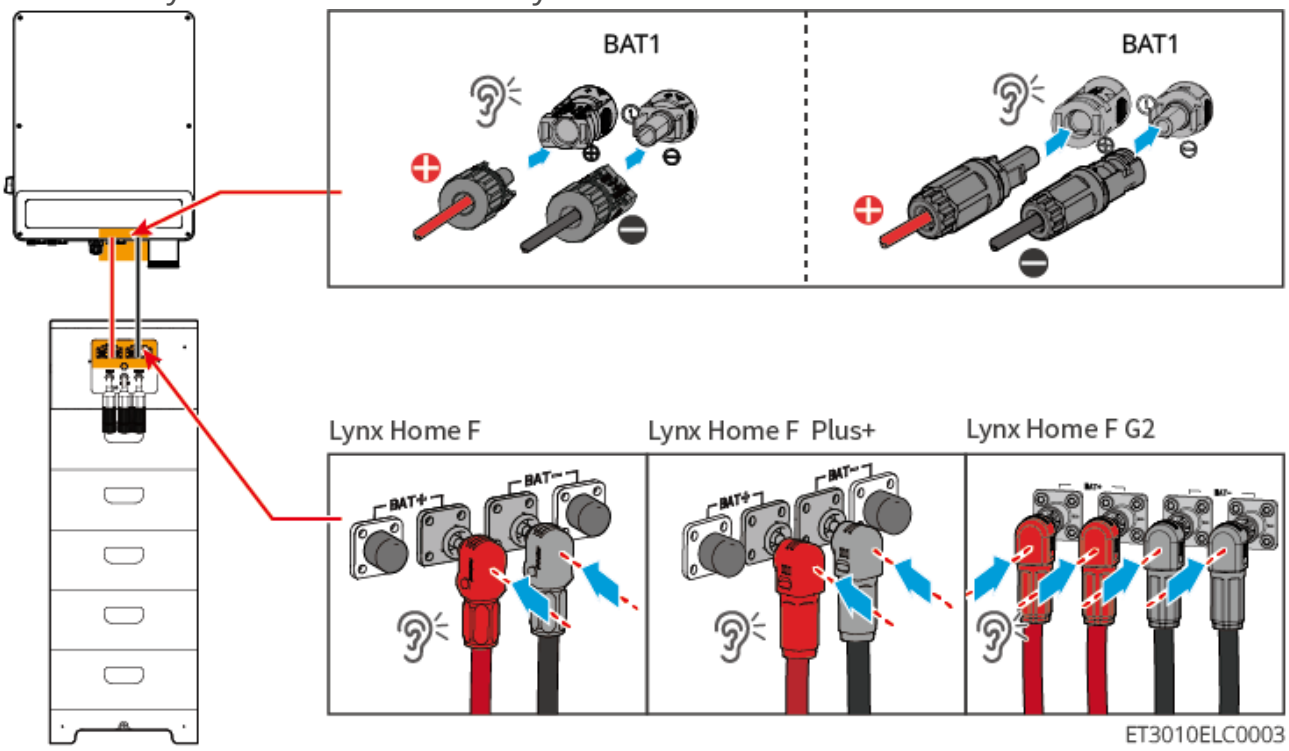

Inverter+ Lynx Home DBattery

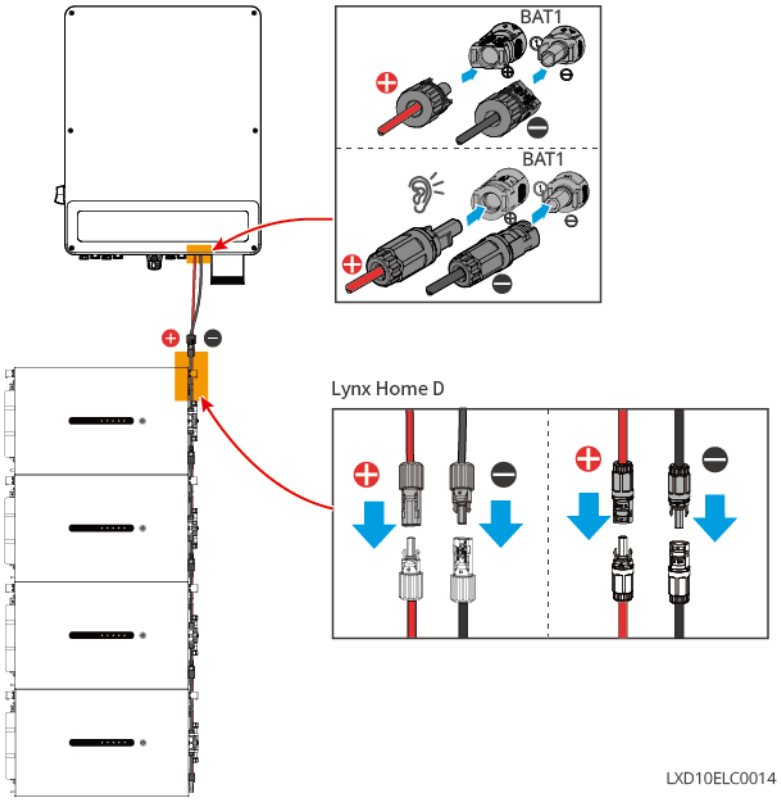

Inverter+ Lynx D G2Battery

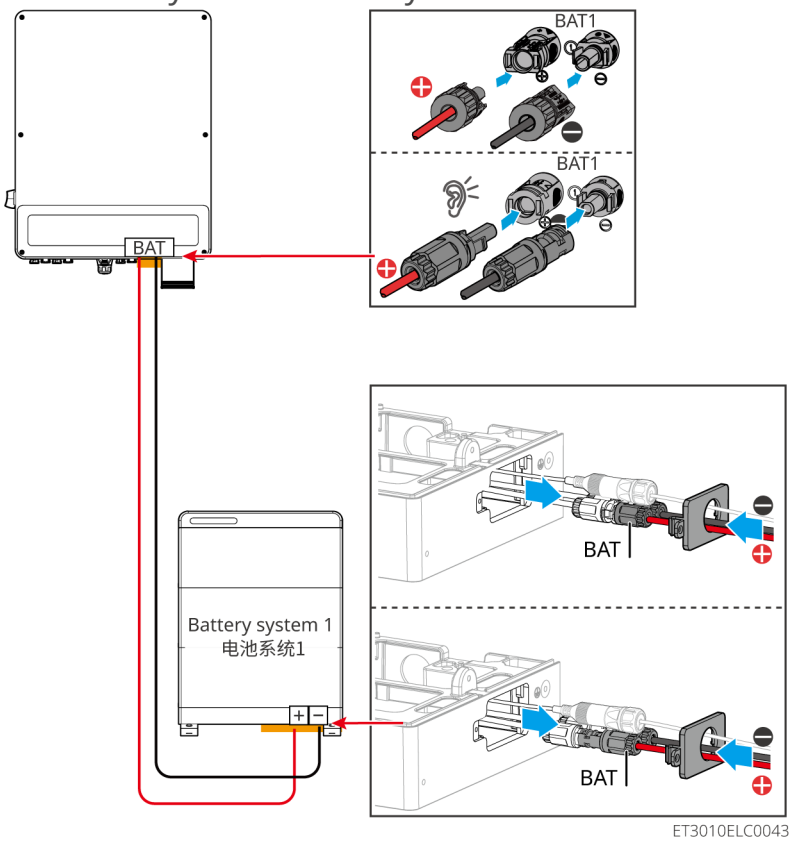

Inverter-side Cable Preparation

Type 1:

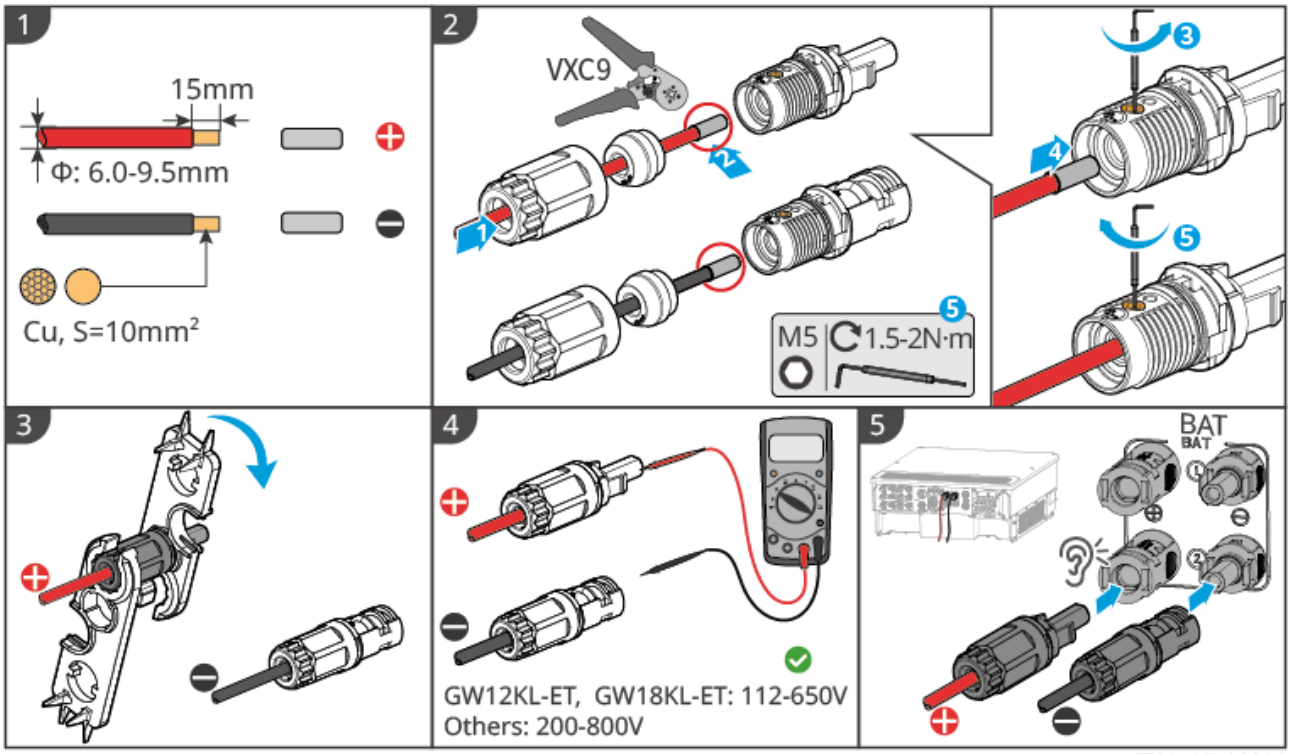

ET3010ELC0004

Type 2:

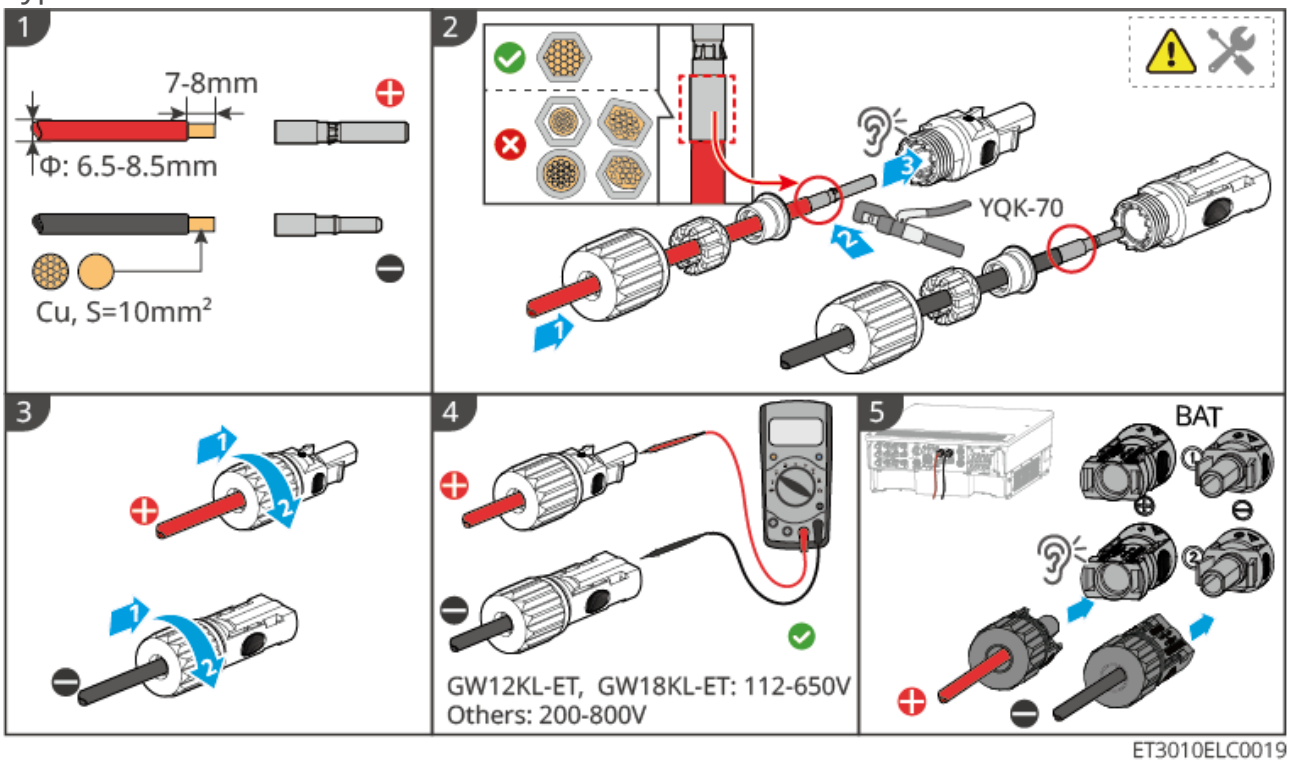

ET3010ELC0019

Battery-side Cable Preparation Method (Lynx Home F)

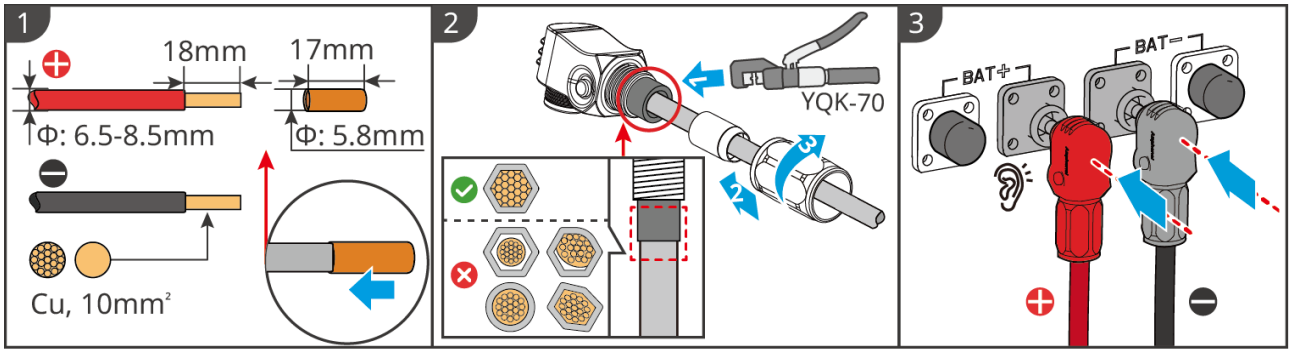

LXF10ELC0006

Battery-side Cable Preparation Method (Lynx Home F Plus+)

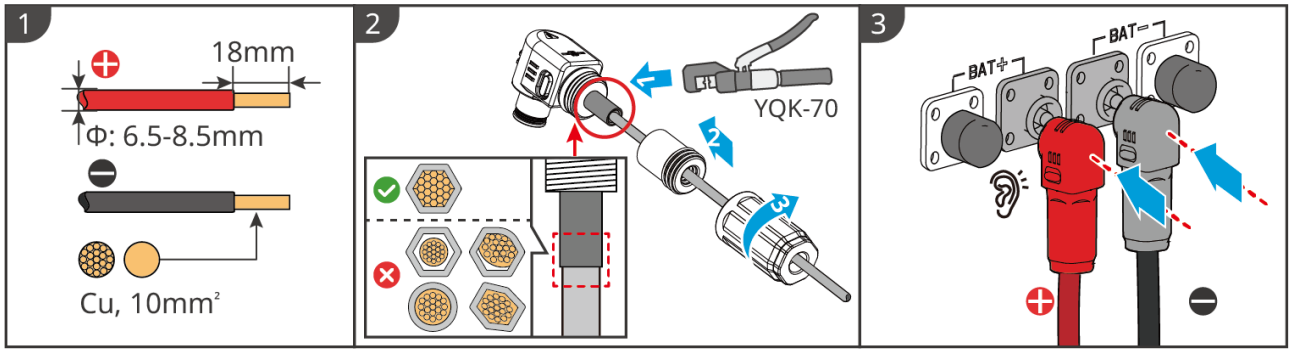

LXF10ELC0007

Battery-side Cable Preparation Method (Lynx Home F G2)

WARNING

- Prepare the DC input cables yourself. Recommended specifications:
  - Type: Outdoor single-core copper cable
  - Conductor cross-sectional areaS：6mm^{2}or10mm^2
- When the conductor cross-sectional areaSis6mm^2, use the DC Connector marked6mm^{2}in the packaging bag, and the pull-out force after cable crimping is completed >450N. When using DC cables of this specification, only a single battery system can be connected. Do not connect battery systems in parallel clusters; otherwise, equipment damage may occur.
- When using a cable cross-sectional areaSis10mm^2, use the DC Connector marked10mm^{2}in the packaging bag, and the pull-out force after cable crimping is completed >500N。
- It is recommended to use YQK-70 hydraulic crimping tool to crimp the battery DC terminals: when the conductor cross-sectional area is 6mm^2, use the crimping die marked "6"; when the conductor cross-sectional area is 10mm^2, use the crimping die marked "10".
- Select the tool for crimping battery DC terminals according to actual needs; the tool shown in the figure is for illustration only.
- If the DC port does not need to be connected to a cable, do not remove the protective cover from the DC port; otherwise, the Ingress Protection Rating of the equipment may be affected.

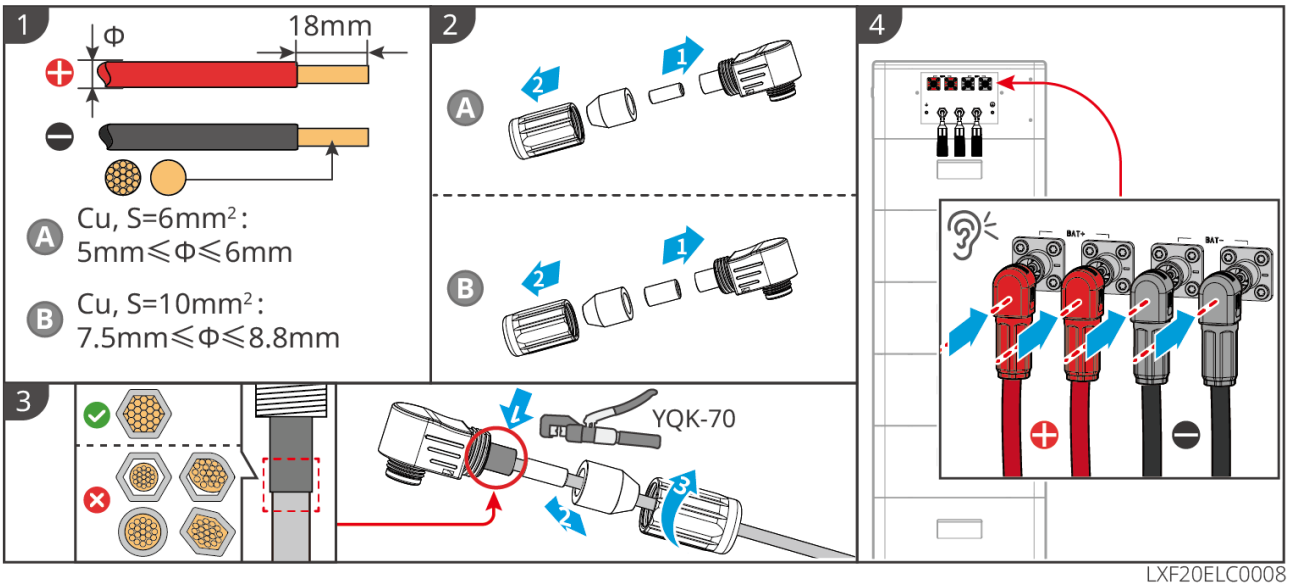

Battery-side Cable Preparation Method (Lynx Home D)

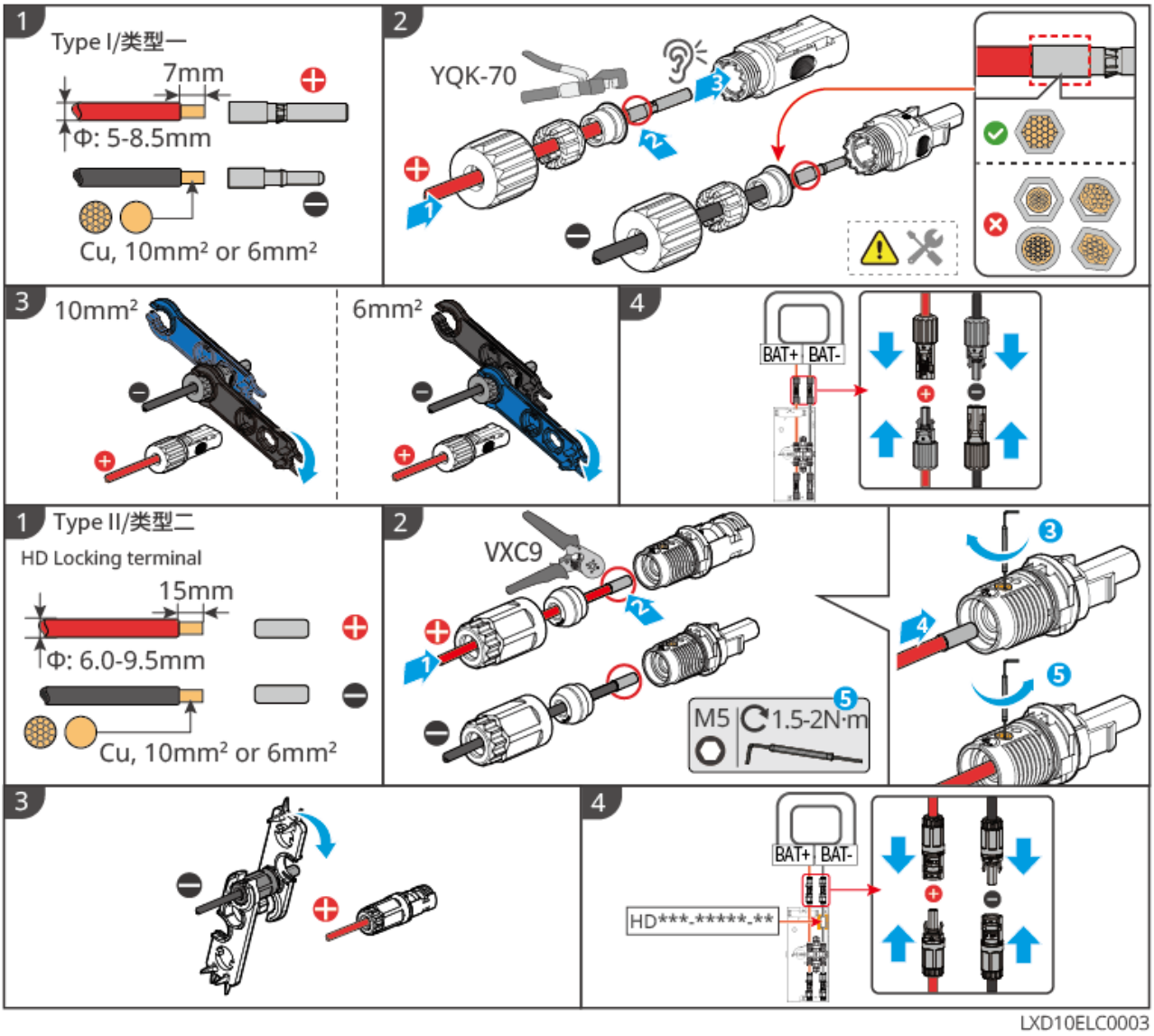

Battery-side Cable Preparation Method (Lynx D G2)

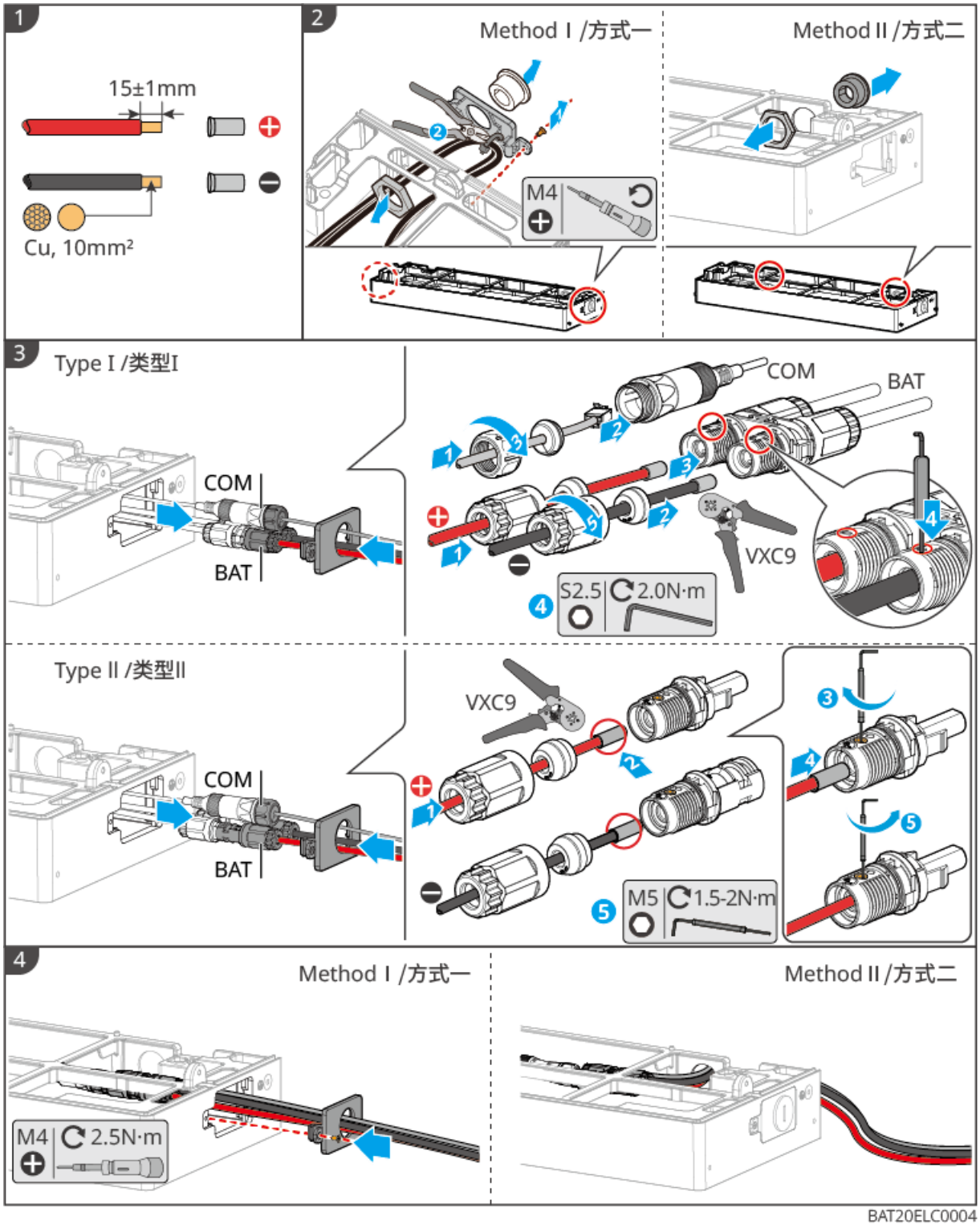

5.7.2 Connect the Inverter-to-Battery Communication Cable

NOTICE

The BMS battery communication cable is shipped with the inverter; it is recommended to use the included BMS battery communication cable. If the included communication cable cannot meet the requirements, prepare a shielded network cable and shielded RJ45 connectors. When crimping, crimp only PIN4 and PIN5 of the RJ45 connector; otherwise, communication may fail.

Inverter+ Lynx Home Fseries battery

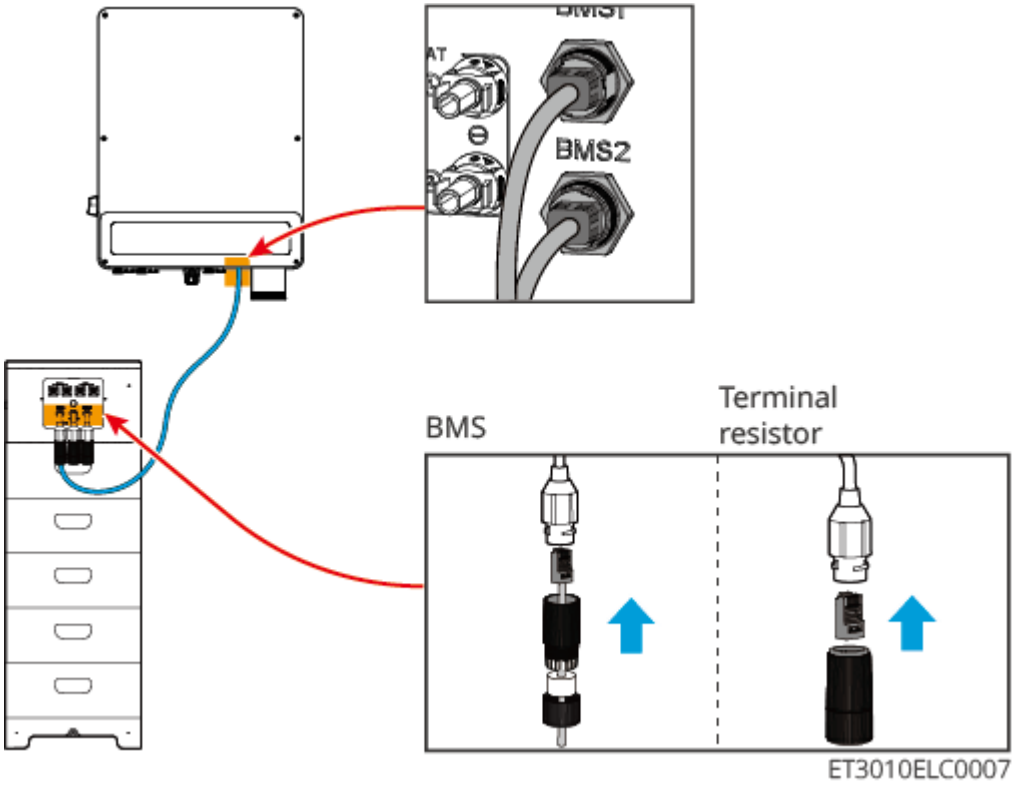

Inverter+ Lynx Home DBattery

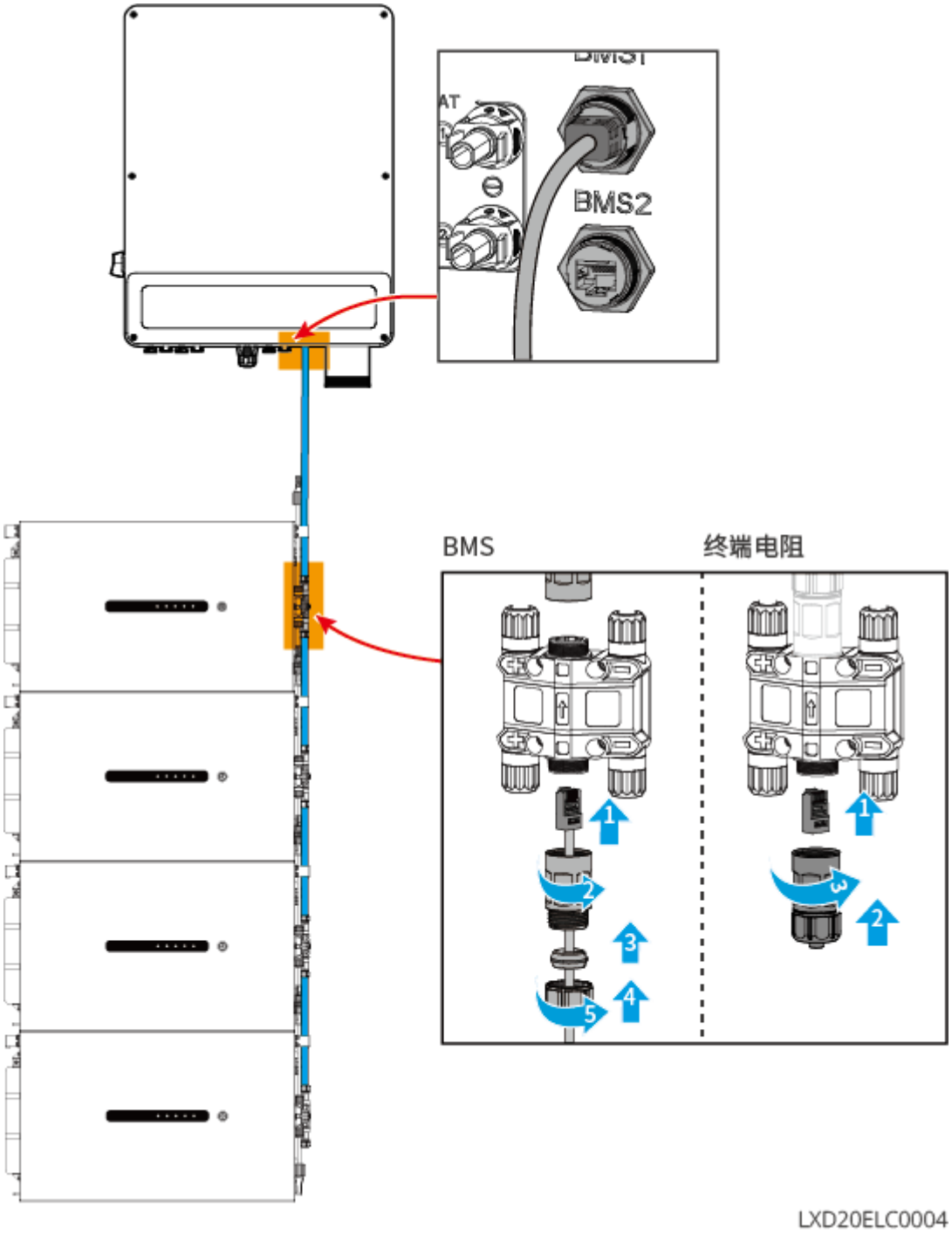

Inverter+ Lynx D G2Battery

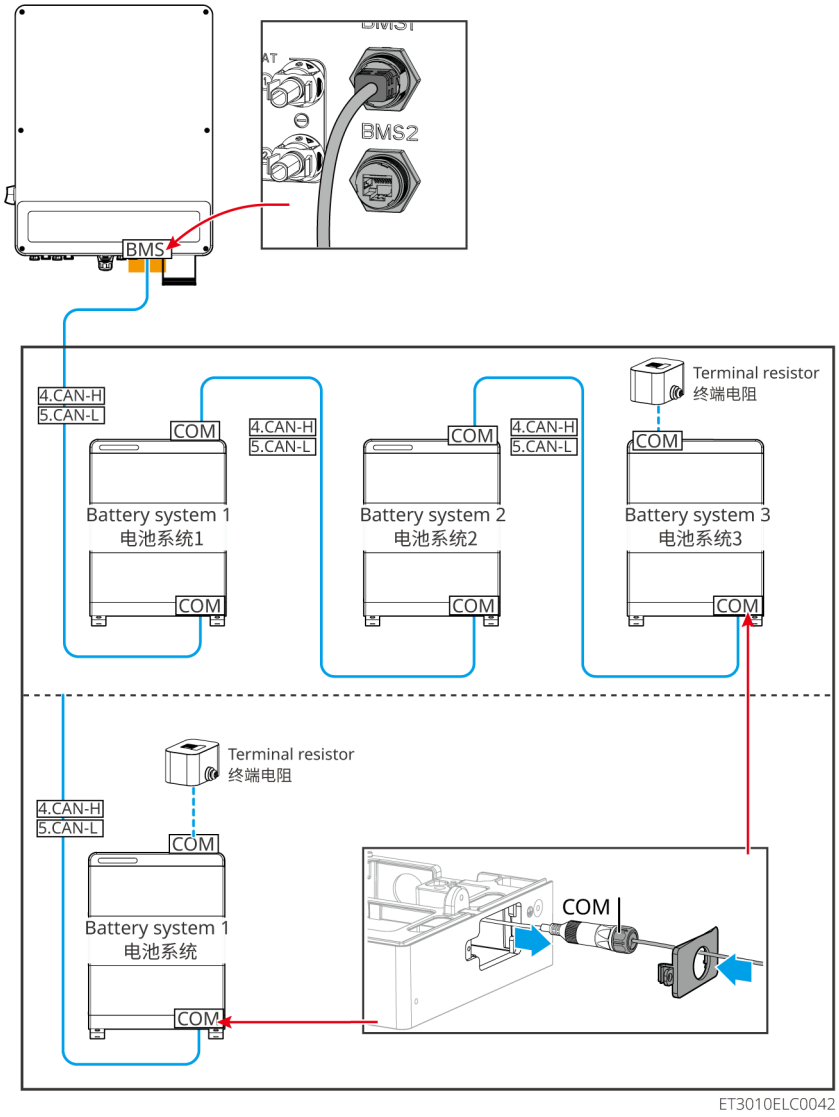

5.7.3 Connect the Power Cables Between Lynx Home D Batteries

Crimp the power cables

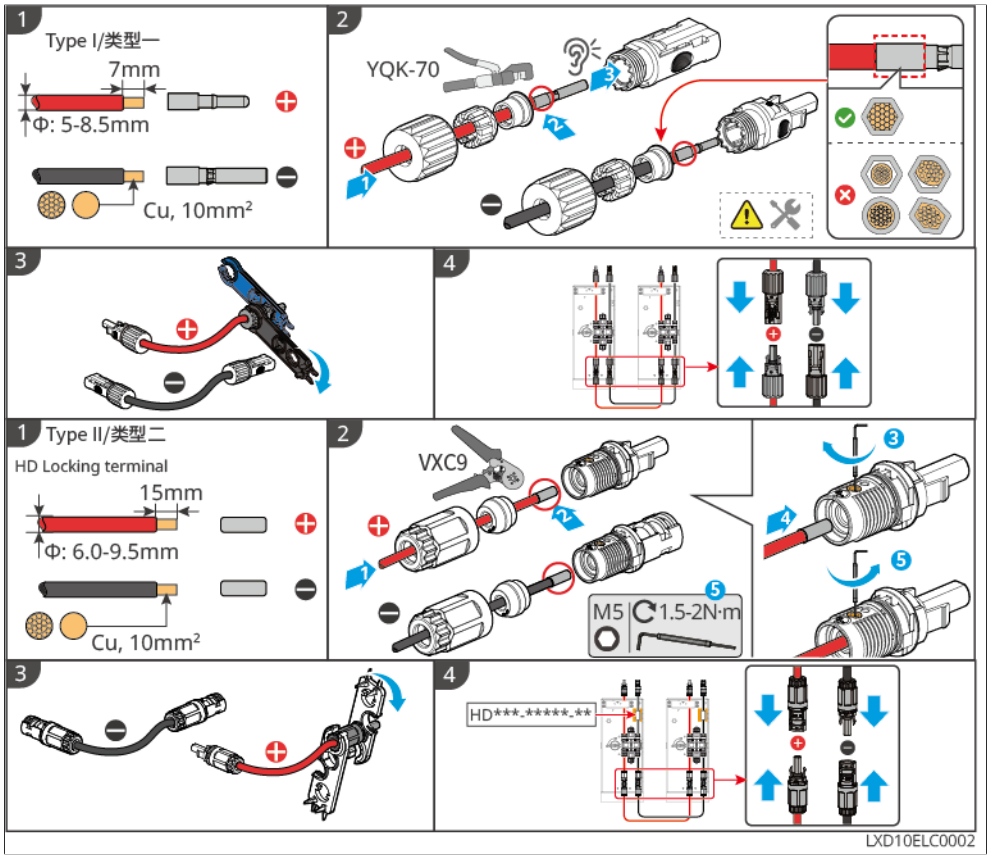

Figure25 Crimp the power cables

Connect the power cables

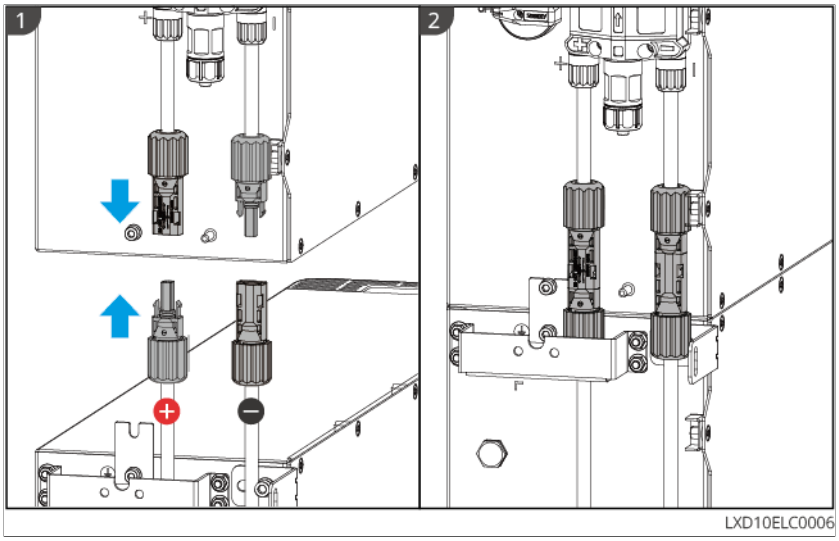

Figure26 Type 1

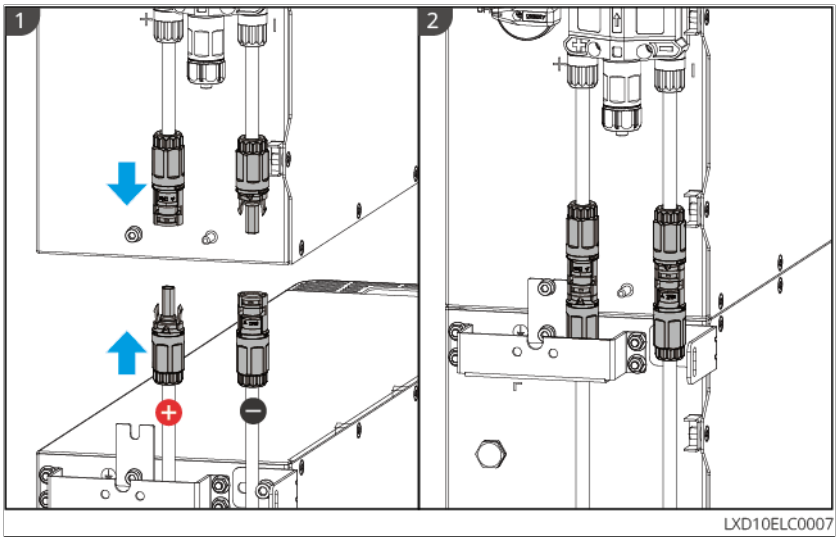

Figure27 Type II

If you need to remove the power connector, refer to the following steps and use the tool shipped with the box for removal.

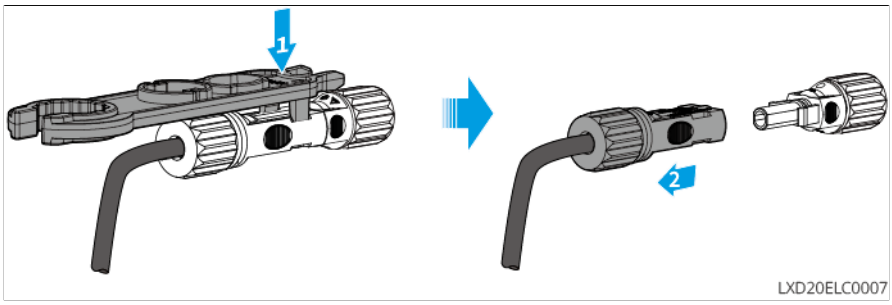

Figure28 Type 1

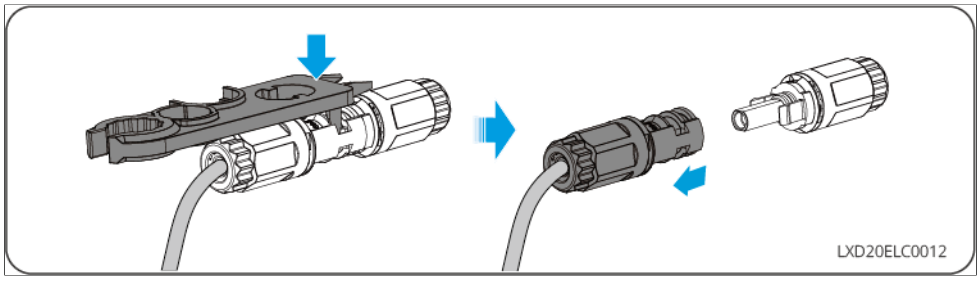

Figure29 Type II

5.7.4 Connect the Battery Communication Cable and Termination

Resistor

Use the inter-battery communication cable and termination resistor shipped with the box.

WARNING

- Do not omit the battery system termination resistor; otherwise, the battery system will not work properly.
- During installation, do not remove the waterproof plug.

Lynx Home DBattery

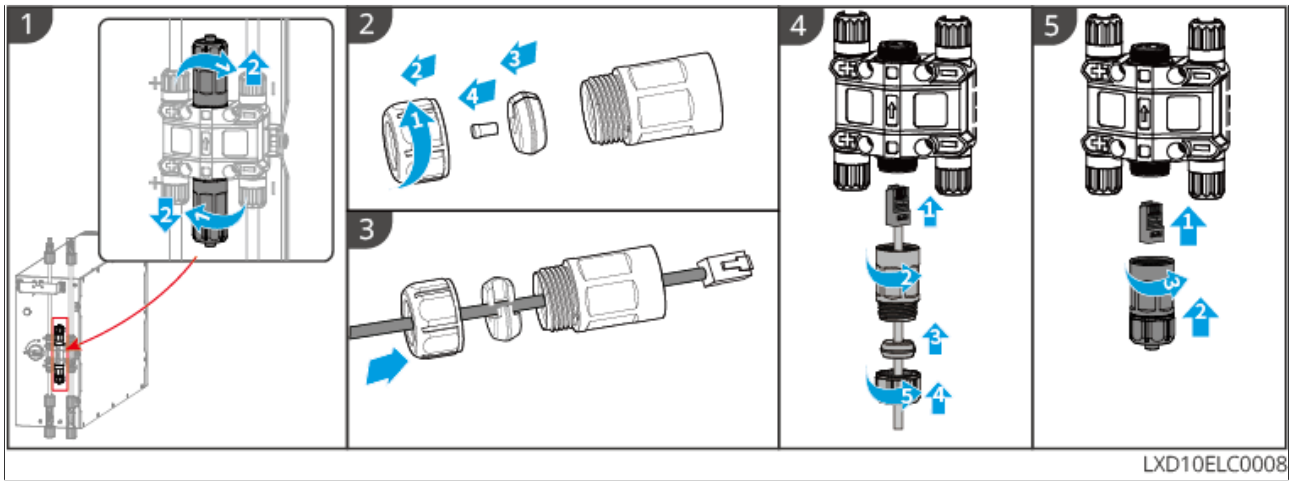

Figure30 Connect the communication cable and termination resistor

Lynx Home F G2

1. Remove the waterproof assembly.
2. Route the communication cable through the waterproof assembly.
3. Connect the communication cable to the battery or install the termination resistor. Tighten the waterproof assembly.

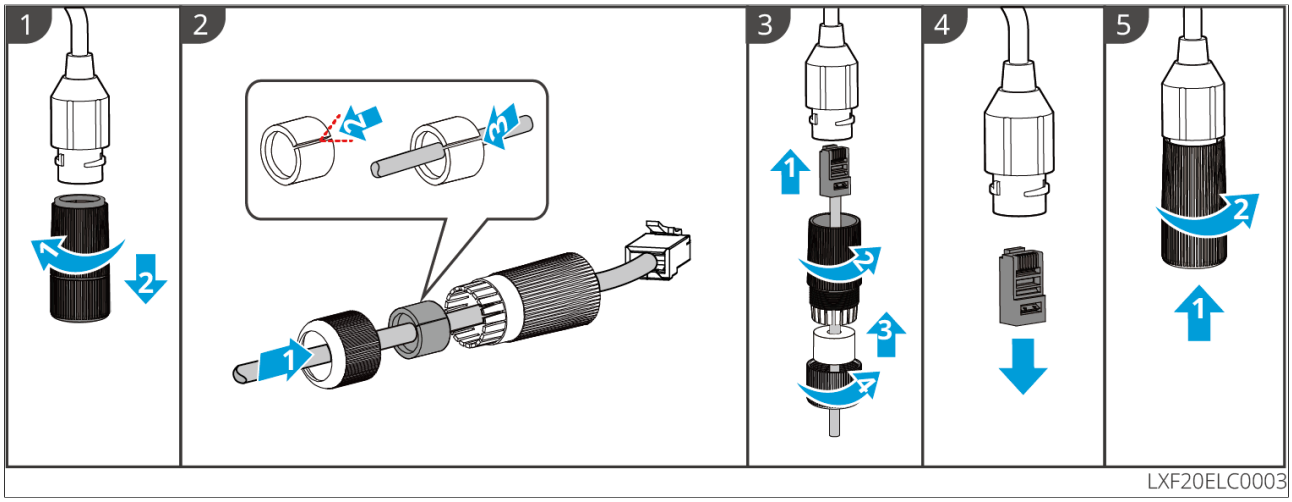

Figure31 Connect the communication cable and termination resistor

5.7.5 Install the Battery Protective Cover

NOTICE
Before installing the front protective cover of the mounting bracket, please remove the release paper from the back of the protective cover.

Lynx Home DBattery

Step1: (Optional) For base-mounted scenarios only, if no cabling is required at the bottom, install the base cable outlet hole plug.

Step2: Install the Battery Side baffle.

Step3: (Optional) For mounting bracket installation scenarios only, install the mounting bracket baffle.

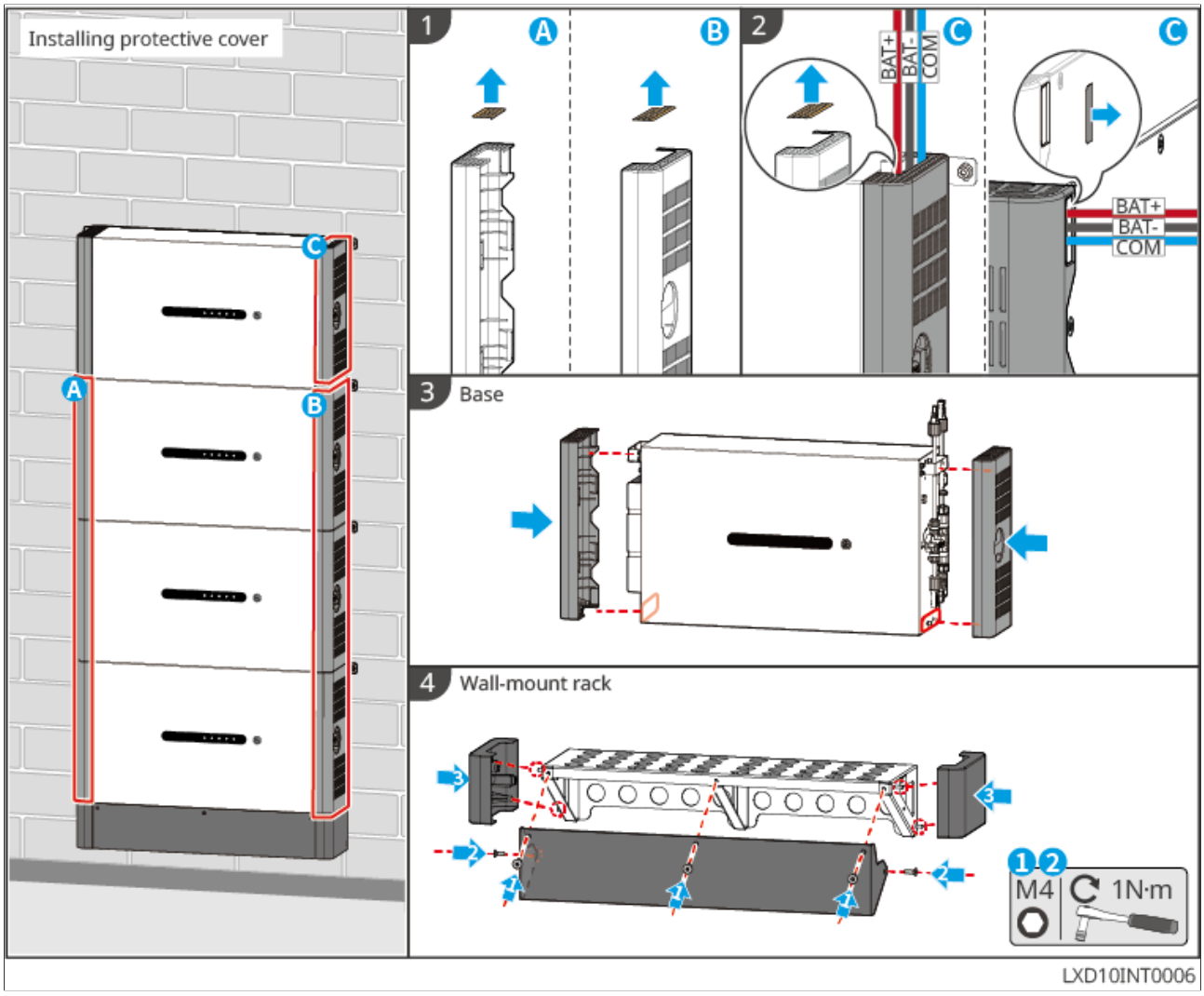

Figure32 Install the Battery Protective Cover

Lynx D G2Battery

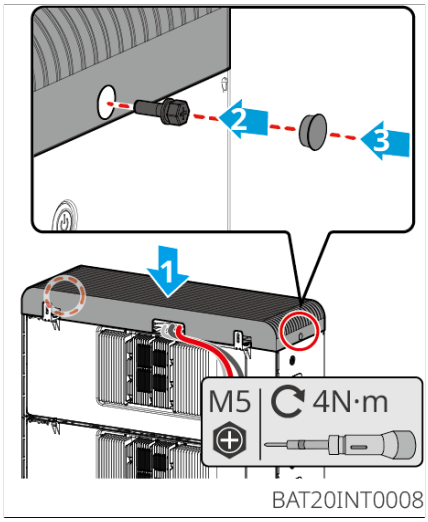

Figure33 Install the Battery Protective Cover

Lynx Home F G2Battery

(Optional) This step applies only to some batteries with protective cover mounting holes or junction boxes. The cover can be installed only after wiring is completed.

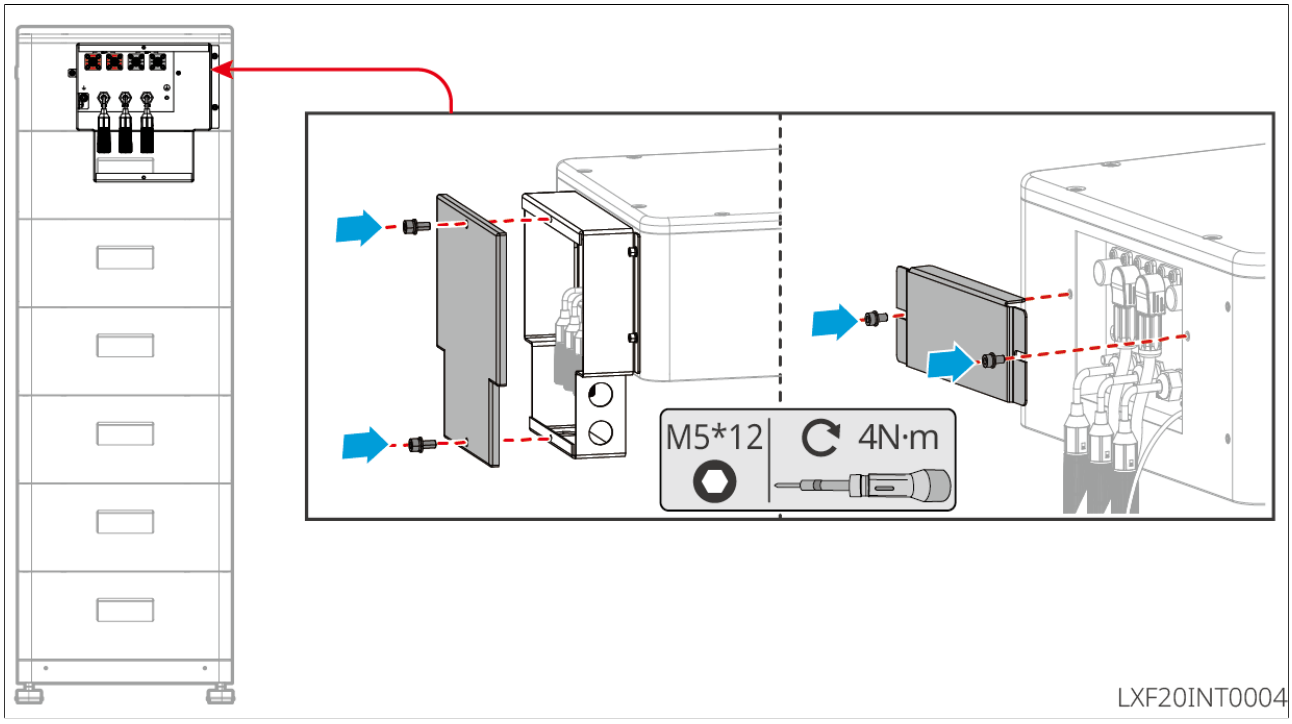

Figure34 Install the cover

5.8 Connect the Meter Cable

NOTICE

- The meter shipped with the inverter is intended for use with only one inverter. Do not connect one meter to multiple inverters. If multiple inverters need meters, please consult the manufacturer to purchase meters separately.
- Ensure that theCTconnection direction and phase sequence are correct; otherwise, monitoring data may be incorrect.
- Ensure all cables are correctly connected, tightened, and free from looseness. Improper wiring may cause poor contact or damage to the meter.
- In areas with lightning hazards, if the meter cable length exceeds10mand the cable is not routed in grounded metal conduit, it is recommended to install external lightning protection devices.

GM3000Meter Wiring

NOTICE

- The outer diameter of the AC power line must be less thanCTaperture to ensure the AC power line can pass throughCT。
- To ensureCTcurrent measurement accuracy,CTcable length is recommended not to exceed30m。
- Do not use network cables asCTcables; otherwise, excessive current may cause damage to the meter.
- TheCTs provided by the equipment manufacturer vary slightly in size and appearance depending on the model, but the installation and wiring methods are identical.

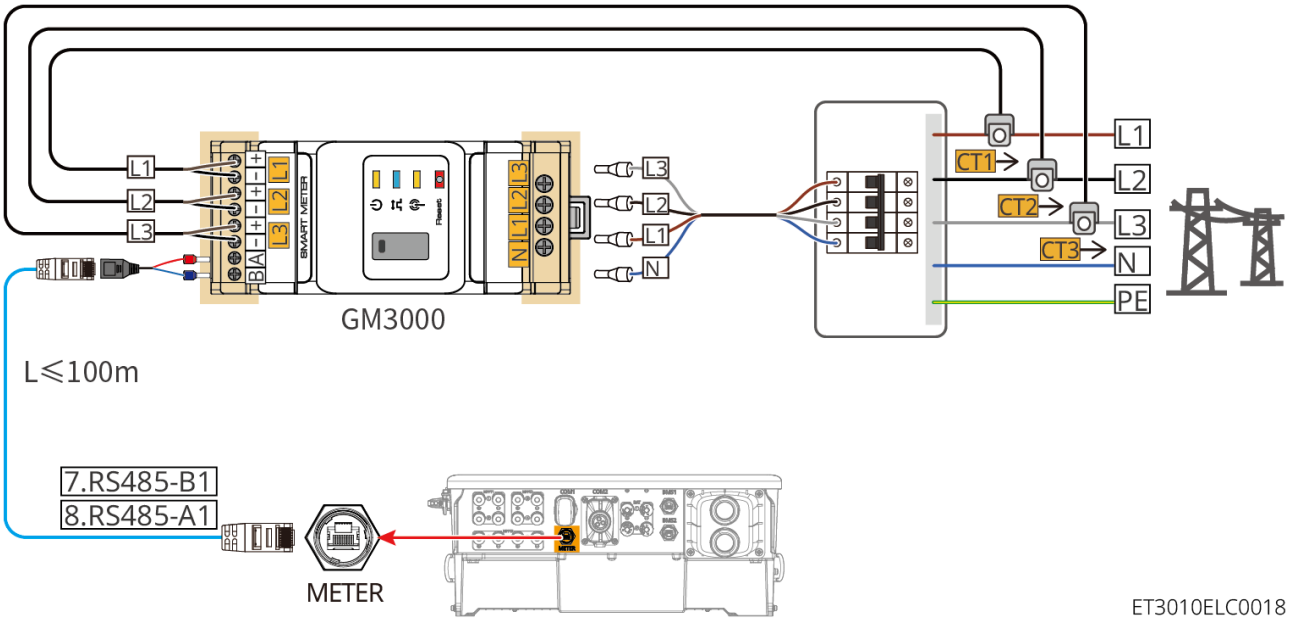

ET3010ELC0018

Wiring Steps

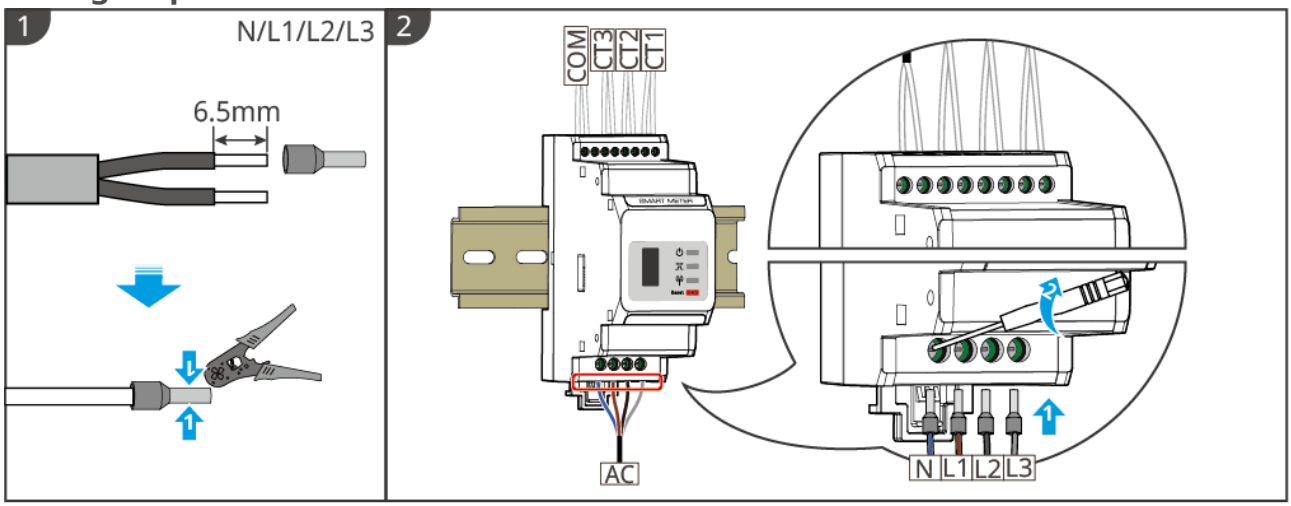

GMK10ELC0003

GM330 & GMK330 Meter Wiring

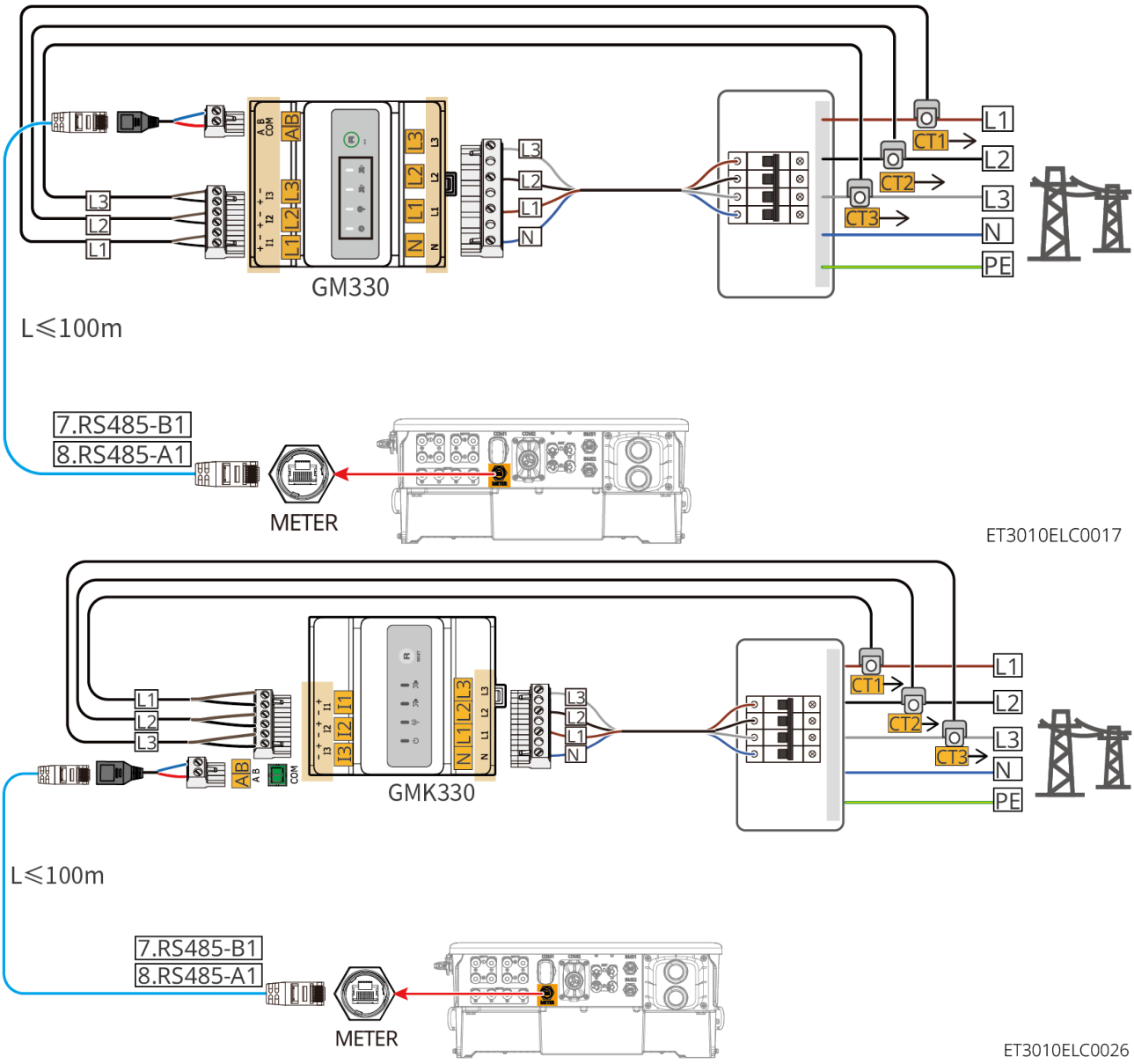

Wiring Steps

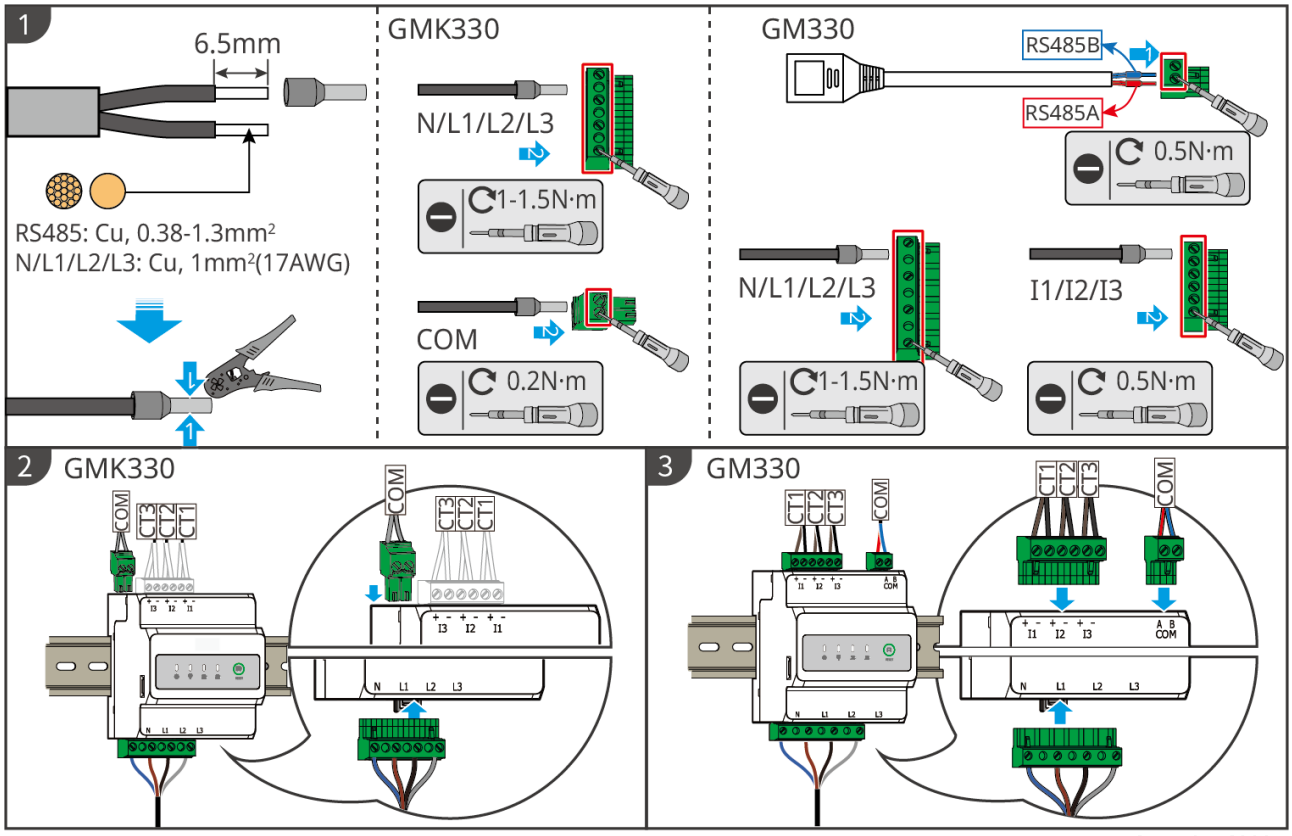

GMK10ELC0027

Install CT (Type 1)

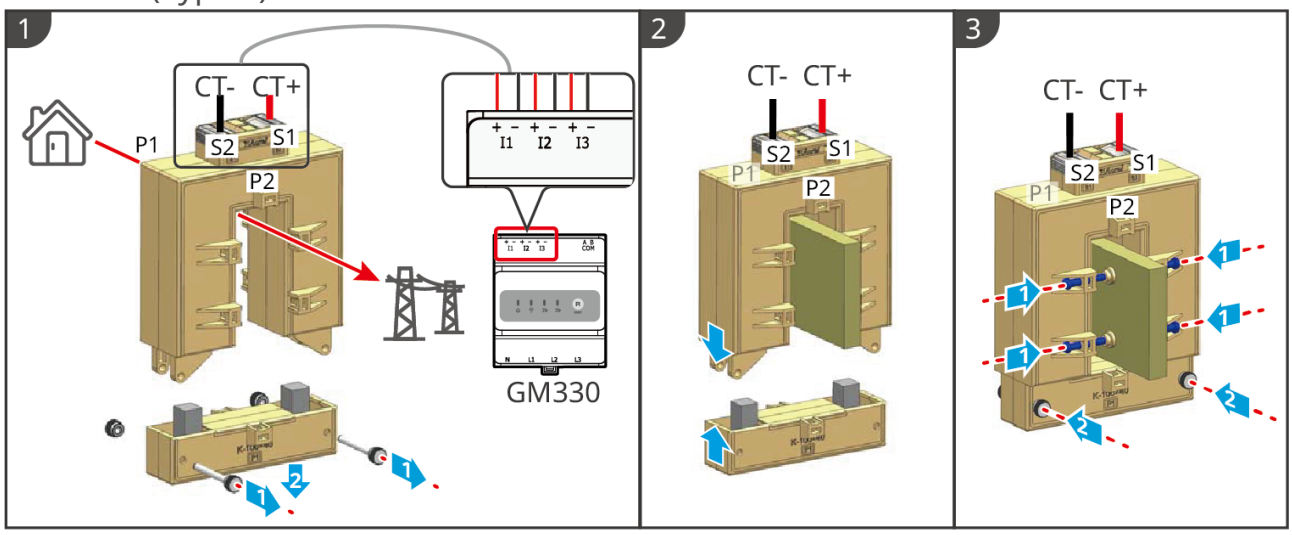

GMK10ELC0006

Install CT (Type 2)

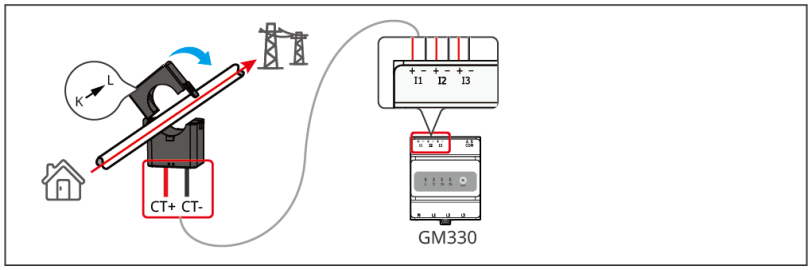

GMK10ELC0007

5.9 Connect the Inverter Communication Cable

NOTICE

- To ensure normal operation of the meter and CT, ensure the following:
  - Ensure that the CTs are connected to the corresponding phase lines: CT1 to L1, CT2 to L2, and CT3 to L3.
  - Connect according to the CT orientation; otherwise, a CT reverse fault may occur.
  - When replacing or maintaining the CT later, use the Meter/CT-Auxiliary Detection function in the SolarGo App so that the inverter can re-adapt to the CT current sampling direction.
- If you need to useDRED、RCRor the Remote Shutdown function, after wiring is complete, enable this function in theSolarGo App.
- If the inverter is Not Connected toDREDdevice or Remote Shutdown device, do not enable this function in theSolarGo App; otherwise, the inverter cannot operate in grid-connected mode.
- In a parallel system, if DRED or RCR functions are required, only connect the DRED and RCR communication cables to the master inverter.
- InverterDOsignal communication port can be connected to dry contact signals with the following specifications:Max≤24Vdc，1A。
- The inverter supports connection to a mobile phone or WEB interface via 4G, Bluetooth, WiFi, or LAN communication to set device parameters, view device operating information and error messages, and keep informed of system status.
- In a single-unit system, the WiFi/LAN Kit-20 or 4G Kit-CN-G20 smart communication dongle can be installed.
- In a parallel system, both the master and slave inverters must be equipped with the WiFi/LAN Kit-20 smart communication dongle for networking.
- When using 4G Kit-CN-G20:
  - If Parallel Networking is required, please contact GoodWe to purchase the

NOTICE

WiFi/LAN Kit-20.
  - In China, a Micro-SIM card is standard, with China Mobile as the operator. Ensure that the device is installed in an area covered by the operator's signal. If local China Mobile signal coverage is unavailable, please contact the operator to optimize the signal.
  - Supports connection to third-party monitoring platforms via the MQTT communication protocol.
- The 4G Kit-CN-G20 is an LTE single-antenna device, suitable for application scenarios with lower data transmission rate requirements.
- If dual meters are required for grid-connected inverter power generation monitoring and load consumption monitoring, use RJ45 splitter for connection.RJ45 splitter. Provide the splitter yourself or contact GoodWe to purchase one.
- To ensure the inverter's waterproof rating, do not remove the waterproof plugs from unused communication ports on the inverter.
- The inverter communication function is optional; select it according to the actual application scenario.

Type 1

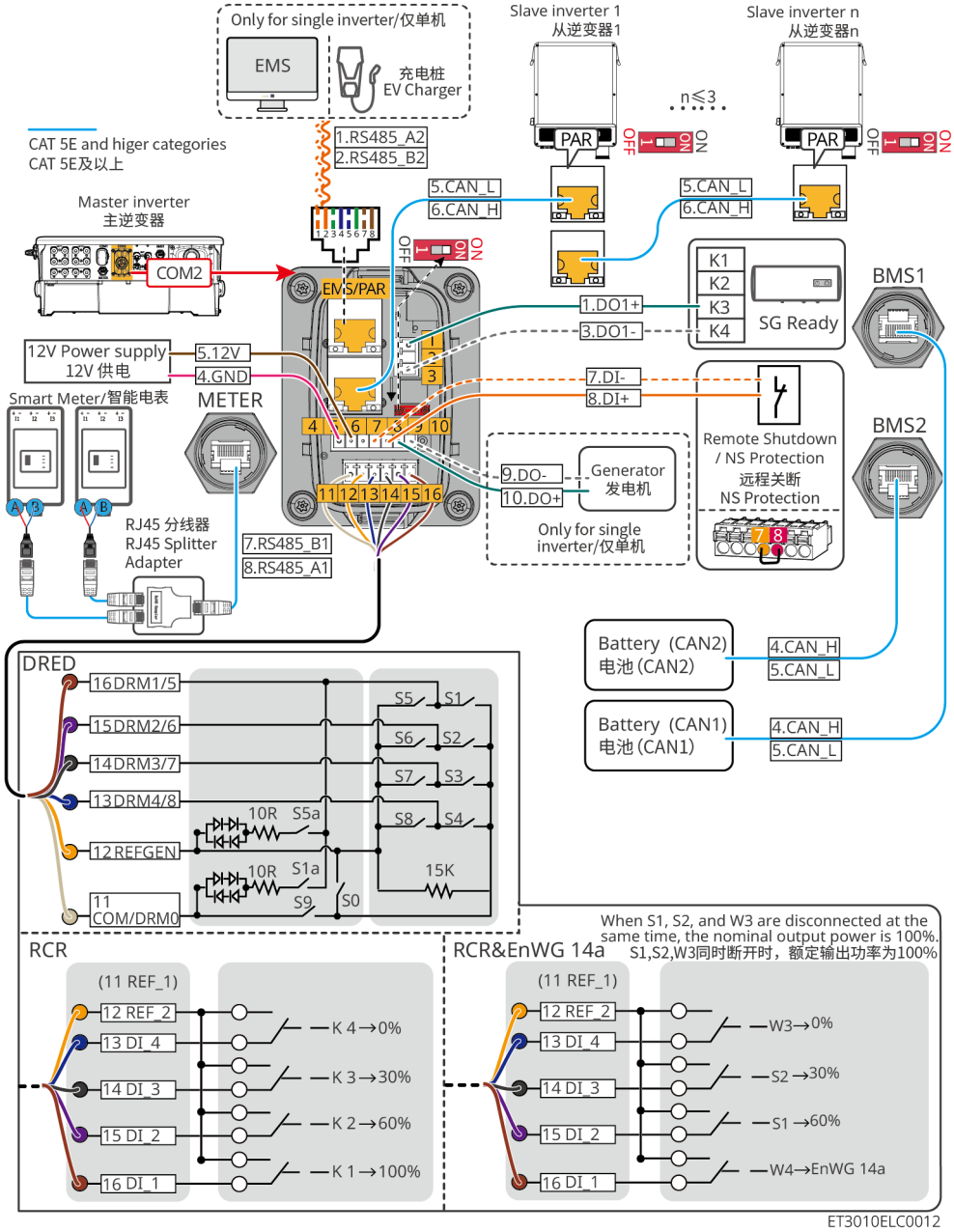
Only for single inverter/仅单机
EMS
充电桩
EV Charger
Slave inverter 1
从逆变器1
Slave inverter n
从逆变器n
n≤3
PAR
OFF
ON
CAT 5E and higer categories
CAT 5E及以上
1.RS485_A2
2.RS485_B2
5.CAN_L
6.CAN_H
Master inverter
主逆变器
COM2
EMS/PAR
1.DO1+
3.DO1-
K1
K2
K3
K4
SG Ready
BMS1
BMS2
12V Power supply
12V 供电
5.12V
4.GND
Smart Meter/智能电表
METER
7.DI-
8.DI+
Remote Shutdown
/ NS Protection
远程关断
NS Protection
9.DO-
10.DO+
Generator
发电机
Only for single
inverter/仅单机
RJ45 分线器
RJ45 Splitter
Adapter
7.RS485_B1
8.RS485_A1
Battery (CAN2)
电池(CAN2)
4.CAN_H
5.CAN_L
Battery (CAN1)
电池(CAN1)
DRED
16 DRM1/5
15 DRM2/6
14 DRM3/7
13 DRM4/8
12 REFGEN
11 COM/DRM0
10R
S5a
S1a
S9
S0
15K
When S1, S2, and W3 are disconnected at the same time, the nominal output power is 100%.
S1,S2,W3同时断开时，额定输出功率为100%
RCR
RCR&EnWG 14a
(11 REF_1)
12 REF_2
13 DI_4
14 DI_3
15 DI_2
16 DI_1
K 4→0%
K 3→30%
K 2→60%
K 1→100%
W3→0%
S2→30%
S1→60%
W4→EnWG 14a
ET3010ELC0012

Type II

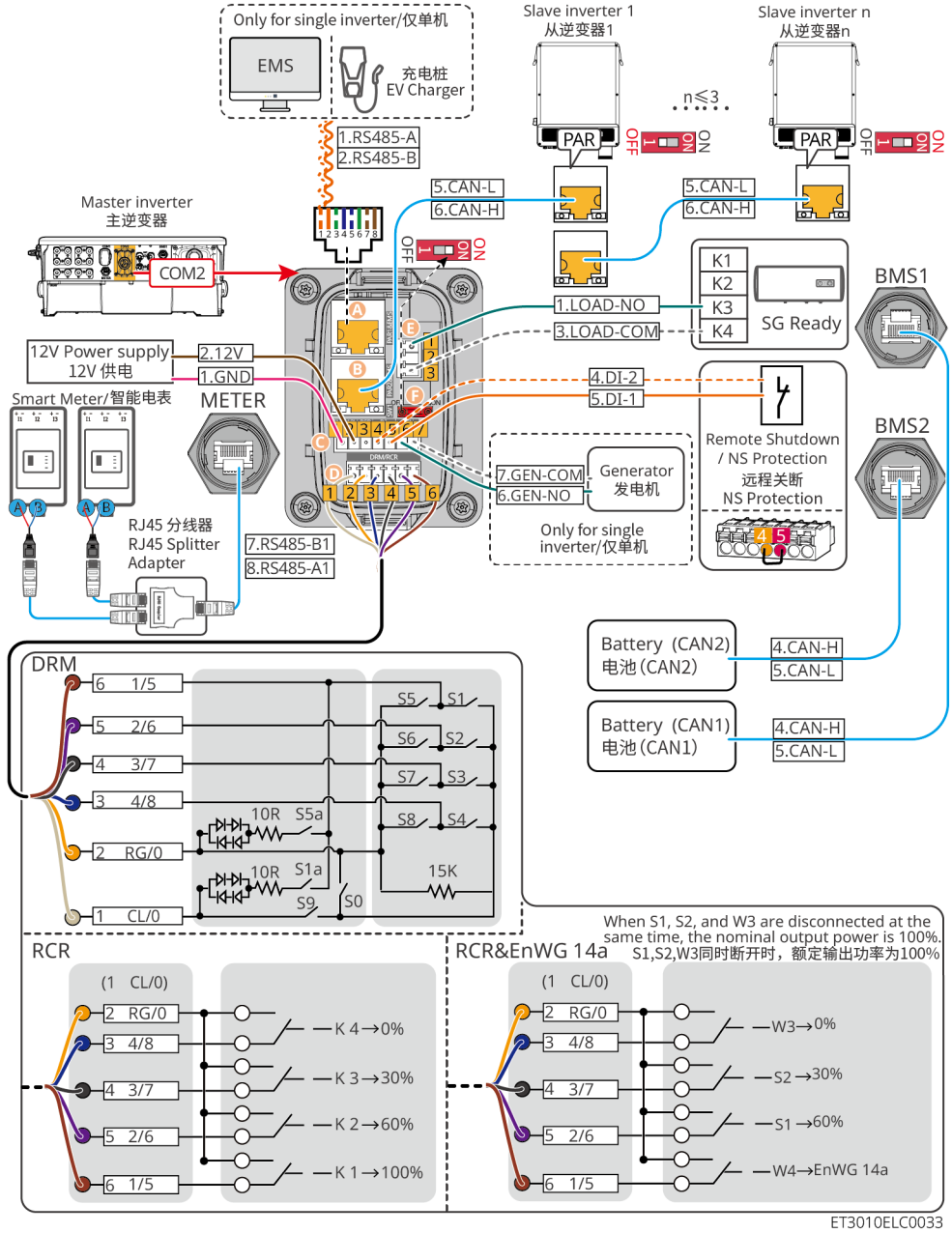

ET3010ELC0033

Silkscreen	Function	Description
DO / LOAD	Load control (SG Ready)	• Supports connection of dry contact signals to implement functions such as load control.DOcontact capacity is 24V DC@1A, NO/COMnormally open contact. • SupportsSG Readyheat pump connection and controls the heat pump via dry contact signals. • Supported operating modes: ◦ Operating mode2(Signal:0:0）：Energy-saving Mode. In this mode, the heat pump operates in Energy-saving Mode. ◦ Operating mode3(Signal:0:1）：Recommendation ON. In this mode, the heat pump maintains current operation while increasing hot water storage to store heat.
GND 12V RSD	12VPower Supply	The inverter provides a12Vpower supply port, supporting up to5Wdevice connection. This port has a short-circuit Protection Function.
DI	Remote Shutdown/NSProtection	Provides a signal control port to control the device's Remote Shutdown or implementNSProtection Function. Remote Shutdown function: • When an emergency occurs, the device can be controlled to stop operating. • The Remote Shutdown device must be a normally closed switch. • When the inverter usesRCRorDREDfunctions, ensure that the Remote Shutdown device is connected or the Remote Shutdown port is short-circuited.

Silkscreen	Function	Description
DO2 / GEN	Diesel Generator Start/Stop Control Port	• Supports connection of Diesel Generator Control signals only in single-inverter scenarios. • The Diesel Generator Control Mode is disabled by default, and the dry contact signal is open; after Control Mode is enabled, the dry contact signal becomes short-circuited.
DRM&RCR /	RCR、DREDorEnWG 14aFunction Connection Port	• RCR （Ripple Control Receiver): ProvidesRCRsignal control port, meeting the grid dispatch requirements of Germany and other regions. • DRED （Demand Response Enabling Device): ProvidesDREDsignal control port, meeting theDERDCertification requirements in Australia and other regions. • EnWG（Energy Industry Act）14a: All controllable loads must accept emergency dimming by the grid. The grid operator may temporarily reduce the maximum grid import power of controllable loads to 4.2kW。
EMS/PAR/PAR-1/PAR1&EMS	• EMSCommunication or EV Charger Communication Port • Parallel Communication Port	• CANandBUSport: parallel communication port. In Parallel Networking, useCANcommunication to connect other inverters; use theBUSbus to control the On/Off-grid status of each inverter in the parallel system. • RS485port: used to connect third-partyEMSdevices and EV chargers. In parallel scenarios, connecting third-partyEMSdevices and EV chargers is not supported.

Silkscreen	Function	Description
EMS/PAR / PAR1&EMS / PAR2&EMS	Parallel Communication Port	• CANandBUSport: parallel communication port. In Parallel Networking, useCANcommunication to connect other inverters; use theBUSbus to control the On/Off-grid status of each inverter in the parallel system
S1	Parallel DIP Switch	For the inverter parallel DIP switch, the default factory setting isONposition. In multi-inverter parallel scenarios, set the parallel DIP switches of the two inverters at both ends toONposition, and set the other inverters to1position
METER	Smart meter connection port	Connect to a smart meter to implement output Power Control, load monitoring, and other functions.
BMS1 / BMS2	Battery communication connection port	Connect to a battery that uses CAN communication. GW12KL-ET、GW15K-ET、GW20K-ET：1 GW18KL-ET、GW25K-ET、GW29.9K-ET、GW30K-ET：2

Communication cable connection method

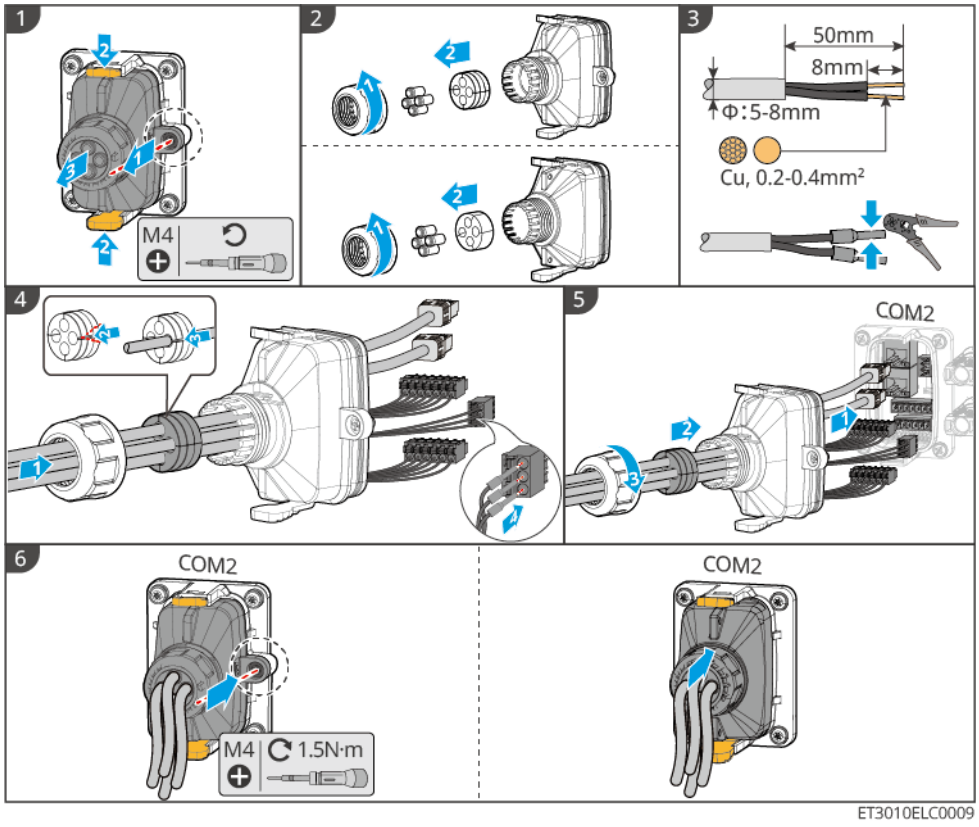

5.10 Connect the Smart Communication Dongle

NOTICE

- The inverter supports connecting via Bluetooth,4G、WiFi、LANsmart communication dongle to a mobile phone orWEBinterface to set device-related parameters, view device operating information and error information, and understand the system status in a timely manner.
- When the system includes multiple inverters and Parallel Networking is used, the master inverter must be equipped withEzlink3000Smart Communication Stick for networking.
- When the energy storage system has only one inverter, you can useWiFi-Kit、WiFi/LAN Kit-20or4GSmart Communication Stick.
- When theWiFicommunication mode is selected to connect the inverter to a router, you can installWiFi-Kit、WiFi/LAN Kit-20orEzlink3000Smart Communication Stick.
- When theLANcommunication mode is selected to connect the inverter to a router, you can installWiFi/LAN Kit-20orEzlink3000Smart Communication Stick.
- When the4Gcommunication mode is selected to upload the energy storage system operating information to the monitoring platform, you can installLS4G Kit-CN、4G Kit-CN、4G Kit-CN-G20or4G Kit-CN-G21communication modules. WhenLS4G Kit-CNor4G Kit-CNis selected, use the Smart Communication Stick shipped with the inverter to configure the parameters of the energy storage system. After configuration is complete, replace it withLS4G Kit-CNor4G Kit-CNfor data transmission. When4G Kit-CN-G20or4G Kit-CN-G21is selected, use the Bluetooth signal emitted by the module to perform local device configuration.
- 4G module is anLTEsingle-antenna device，suitable for application scenarios with low data transmission rate requirements.
- 4G module has a built-inSIMcard that is a mobile communication card. Please confirm whether the device is installed in an area covered by mobile4Gsignals;
- 4G Kit-CN-G20or4G Kit-CN-G21communication stick is installed, please contact the after-sales service center to bind the inverter and the communication stick. After binding, if you need to install the communication stick on another inverter, please contact the after-sales service center to unbind it first.
- To ensure4Gsignal communication quality, do not install the device indoors or in areas with metal signal interference.

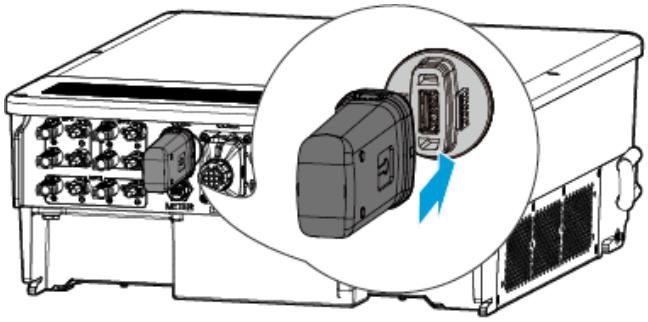

ET3010ELC0034

6 System Trial Operation

6.1 Checks Before System Power-On

No.	Check items
1	The equipment is securely installed; the installation location facilitates operation and maintenance; the installation space facilitates ventilation and heat dissipation; and the installation environment is clean and tidy.
2	Protection earth conductor, DC cables, AC cables, communication cables, and termination resistors are correctly and securely connected.
3	Cables are bound in accordance with routing requirements, reasonably distributed, and free of damage.
4	For unused cable entry holes and ports, make sure to use the matching terminals provided with the accessories for reliable connection, and ensure they have been sealed.
5	Ensure that cable entry holes in use are sealed.
6	The voltage and frequency at the inverter grid-connection point meet the grid-connection requirements.

6.2 System Power-On

WARNING

- Battery black start function: When no PV power is generated in the PV system and the grid is abnormal, if the inverter cannot operate normally, the battery black start function can be used to force the battery to discharge and start the inverter. The inverter can then enter off-grid mode and supply power to loads from the battery.
- After the battery system starts, ensure that the inverter communicates normally with the battery system within 15 minutes. If the inverter cannot communicate normally with the battery system, the battery system switch will automatically open and power off the battery system.

Single-unit scenario

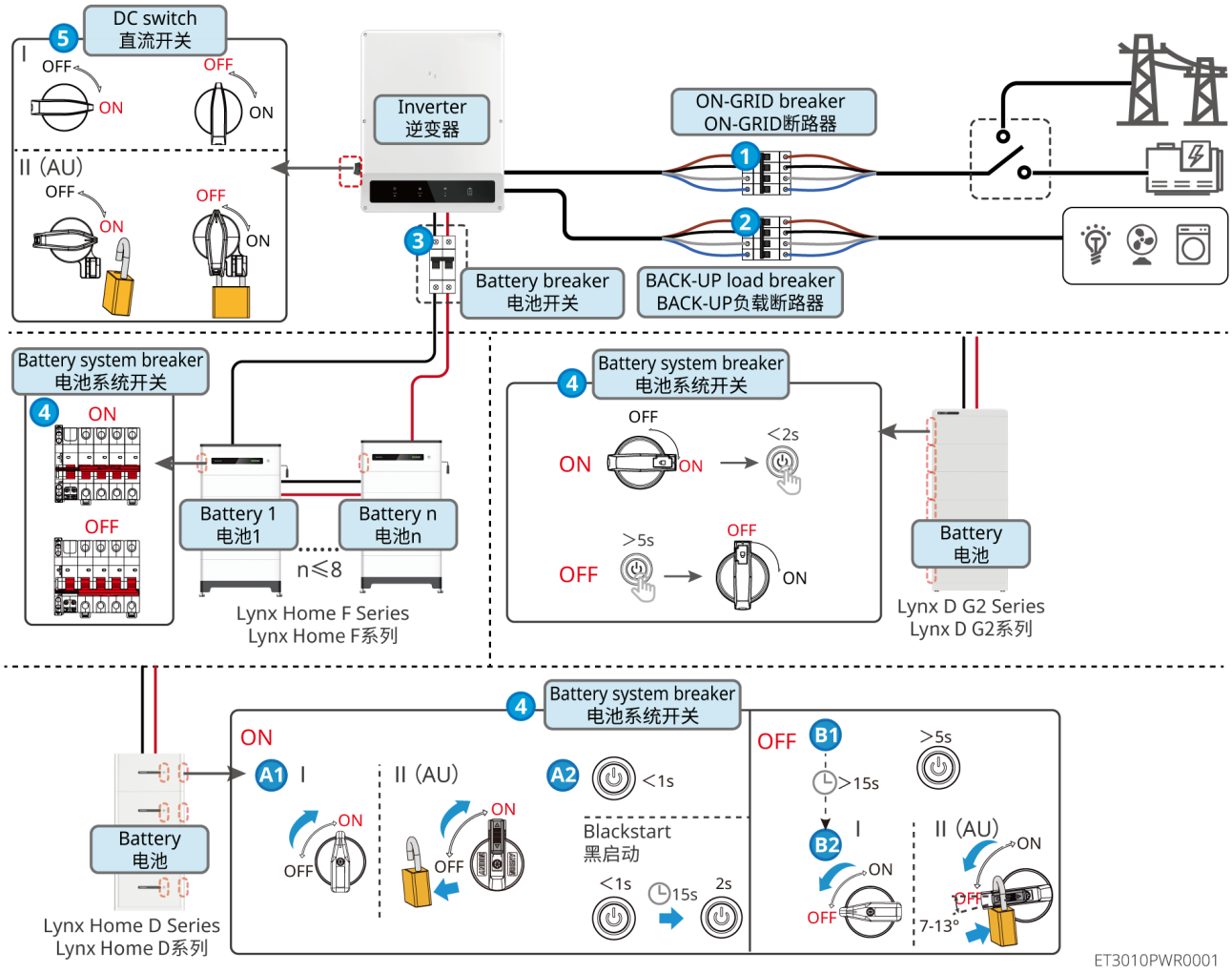

1. (Select according to local regulations) Close the switch between the inverter and

the battery.

2. Start the battery system.
   - Normal Battery Startup
     - Lynx Home F series: Close the battery system switch.
     - Lynx Home D: Turn the battery power switch to the ON position and briefly press the battery multi-function button. All batteries need to be powered on separately.
     - Lynx D G2: Close the battery power switch and briefly press the battery multi-function button. When there are multiple batteries in the system, close the power switches of all batteries. Briefly pressing the multi-function button on any one battery can start all batteries.
   - Battery Black Start
     - Lynx Home F series: Close the battery system switch and long-press the multi-function button on the control box for 5s-10s to start the battery system. For a parallel cluster system, long-press the multi-function buttons of all battery systems in sequence.
     - Lynx Home D: Turn the battery power switch to the ON position and briefly press the battery multi-function button; all batteries need to be powered on separately; after all batteries are powered on separately, wait 15 seconds, then press the battery multi-function button on any battery for 2s.
     - Lynx D G2: When there are multiple batteries in the system, close the power switches of all batteries. After all batteries are powered on separately, wait 15 seconds, then press the multi-function button on any one battery for 2 seconds; the battery will forcibly discharge to activate the inverter.
3. Close the inverter's DC Switch.
4. Close the inverter's ON-GRID circuit breaker.
5. Close the BACK-UP circuit breaker.

Parallel operation scenario

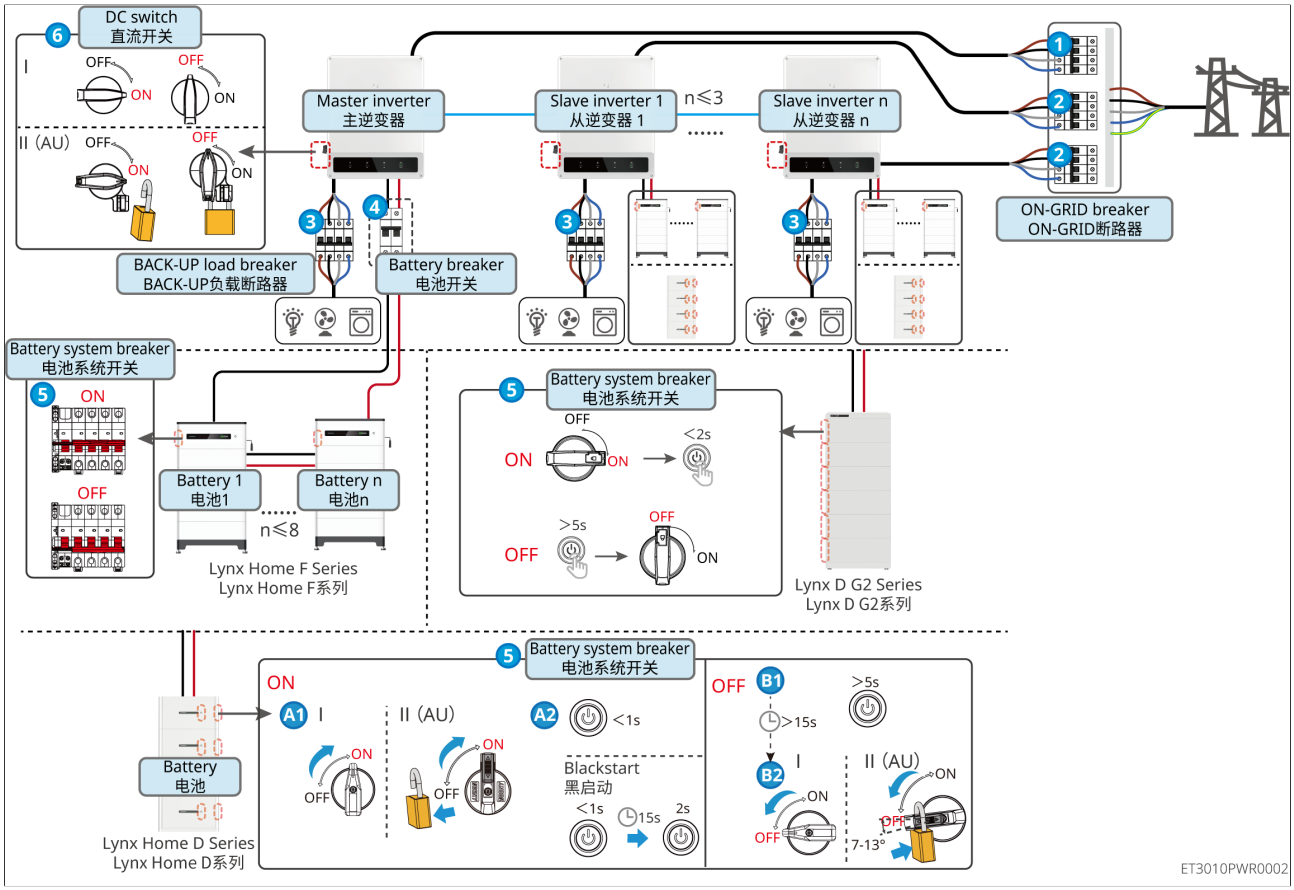

1. (Select according to local regulations) Close the switch between the inverter and the battery.
2. Start the battery system.
   - Normal Battery Startup
     - Lynx Home F series: Close the battery system switch.
     - Lynx Home D: Turn the battery power switch to the ON position and briefly press the battery multi-function button. All batteries need to be powered on separately.
     - Lynx D G2: Close the battery power switch and briefly press the battery multi-function button. When there are multiple batteries in the system, close the power switches of all batteries. Briefly pressing the multi-function button on any one battery can start all batteries.
   - Battery Black Start
     - Lynx Home F series: Close the battery system switch and long-press the multi-function button on the control box for 5s-10s to start the battery system. For a parallel cluster system, long-press the multi-function buttons of all battery systems in sequence.

- Lynx Home D: Turn the battery power switch to the ON position and briefly press the battery multi-function button; all batteries need to be powered on separately; after all batteries are powered on separately, wait 15 seconds, then press the battery multi-function button on any battery for 2s.
- Lynx D G2: When there are multiple batteries in the system, the power switches of all batteries must be closed. Short press the multi-function button on any battery to start the battery. After the batteries are powered on respectively, wait 15 seconds. Press the multi-function button on any battery for 2 seconds; the battery will be forced to discharge to activate the inverter.

3. Close the inverter's DC Switch.
4. Close the ON-GRID circuit breaker of the main inverter.
5. Close the ON-GRID circuit breaker of the slave inverter.
6. Close the BACK-UP circuit breaker.

6.3 Indicator Light Introduction

6.3.1 Inverter Indicator Lights

Indicator light	Status	Description
		The inverter is powered on and in standby mode.
	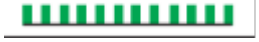	The inverter is starting up and in self-test mode.
		The inverter is operating normally in grid-connected generation or off-grid mode.
		BACK-UP output overload
		System Fault
		The inverter is powered off.
		Grid abnormal, and the inverter BACK-UP port is supplying power normally.
		Grid normal, and the inverter BACK-UP port is supplying power normally.
		No power supply at the BACK-UP port
		The inverter monitoring module is resetting.

Indicator light	Status	Description
		No connection established between the inverter and the communication terminal.
		Communication fault between the communication terminal and the cloud server.
		Inverter monitoring normal.
		The inverter monitoring module is not started.

6.3.2 Battery Indicator Lights

6.3.2.1 Lynx Home F Series



LXU10CON0001

Normal state

SOCIndicator light	Button indicator light	Battery system status
	Green flashing1th/s	The battery system is in standby state
	Green flashing2th/s	The battery system is in idle state

SOCIndicator light 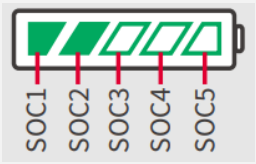	Button indicator light 	Battery system status
SOCindicator light indicates the battery system state of charge 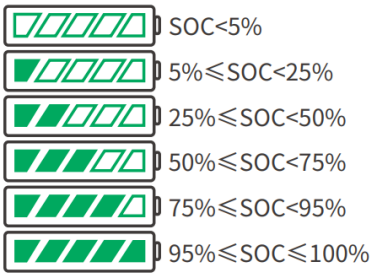	Solid green	The battery system is in the charging state. Note: When the batterySOCreaches the charge cut-offSOC, charging of the battery will stop.
The highestSOCindicator flashes1th/s • When5%≤SOC<25%,SOC 1Flashing • When25%≤SOC<50%,SO C2Flashing • When50%≤SOC<75%,SO C3Flashing • When75%≤SOC<95%,SO C4Flashing • When95%≤SOC≤100%,S OC5Flashing	Solid green	The battery system is in the discharging state. Note: When the system does not need to supply power to the load or the battery SOCis lower than the configured depth of discharge, the battery will no longer discharge.

Abnormal state

Button indicator light	Battery system status	Description
Red flashes1th/s	An alarm occurs in the battery system.	After an alarm occurs in the battery system, the battery system will perform a self-check. After the battery system self-check is complete, the battery system enters the normal operating state or fault state.
Red steady on	A fault occurs in the battery system.	Based on theSOCindicator display pattern, determine the fault type and handle it according to the methods recommended in the fault handling chapter.

6.3.2.2 Lynx Home D

Normal state

SOCIndicator light	Button indicator light	Battery system status
SOCindicator light indicates the battery system state of charge SOC<5% 5%≤SOC<25% 25%≤SOC<50% 50%≤SOC<75% 75%≤SOC<95% 95%≤SOC≤100%	Green flashing	The battery system is in standby state
	Solid green	The battery system is in the charging state. Note: When the batterySOCreaches the charge cut-offSOC, charging of the battery will stop.

SOCIndicator light 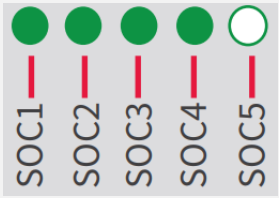	Button indicator light 	Battery system status
The highestSOCindicator flashes1th/s • When5%≤SOC<25%,SOC1Flashing • When25%≤SOC<50%,SOC2Flashing • When50%≤SOC<75%,SOC3Flashing • When75%≤SOC<95%,SOC4Flashing • When95%≤SOC≤100%,SOC5Flashing	Solid green	The battery system is in the discharging state. Note: When the system does not need to supply power to the load or the battery SOCis lower than the configured depth of discharge, the battery will no longer discharge.

Abnormal state

Button indicator light 	Battery system status	Description
Red flashes	An alarm occurs in the battery system.	After an alarm occurs in the battery system, the battery system will perform a self-check. After the battery system self-check is complete, the battery system enters the normal operating state or fault state. System operation information can be uploaded to the monitoring platform viaAppto view alarm information.

Button indicator light 	Battery system status	Description
Red steady on	A fault occurs in the battery system.	You can determine the fault type based on theSOCindicator display pattern or use theAppto view fault information, and handle it according to the methods recommended in the fault handling chapter.

6.3.2.3 Lynx D G2

No.	 Green LED	 Red LED	Battery system status	Description
1	Steady on	--	System operating normally	Run
2	Flashing1 th/S		System ready	Standby
	Flashing3 th/S	--	PCSComm Loss	--
3	Flashing1 th/2S	--	System Alarm	including those in the fault list2level faults, among which the undervoltage fault is2、3、4level time
4	--	Steady on	System Fault	Faults in the fault list: Level3and above (undervoltage faults: steady on at Level5)

6.3.3 Smart Meter Indicator Lights

GM330&GMK330

type	Status	Description
Power light 	Steady on	The meter is powered on, with no RS485 communication.
	Flashing	The meter is powered on, and RS485 communication is normal.
	Off	The meter is powered off.
Communication indicator 	Off	Reserved
	Flashing	Press and hold the Reset button for ≥5 s; the power indicator and the Import/Export Energy indicator blink: meter reset.
Import/Export Energy indicator 	Steady on	Import energy from the grid
	Flashing	Export Energy to the grid
	Off	No energy import and no Export Energy
	Reserved	

GM3000

type	Status	Description
Power light 	Steady on	The meter is powered on
	Off	The meter is powered off.
Import/Export Energy indicator 	Steady on	Import energy from the grid
	Flashing	Export Energy to the grid
Communication indicator 	Flashing	Communication normal
	Blinks continuously5th	• PressResetbutton<3s: meter reset • PressResetbutton5s: meter parameters are restored to factory defaults • PressResetbutton>10s: meter parameters are restored to factory defaults and energy data is cleared
	Off	No communication with the meter

6.3.4 Smart Communication Stick Indicator

- **Wi-Fi Kit**

Indicator light	Color	Status	Description
Power light 	Green	On	Wi-Fi Kitis powered on.
		Off	Wi-Fi Kitis not powered on or is restarting.
Communication indicator 	Blue	On	WiFi APhotspot has been connected.
		Off	• Wi-Fi Kitcommunication is abnormal. • Wi-Fi Kitis restarting.

- **WiFi/LAN Kit-20**

NOTICE
• After double-clicking the Reload button to enable Bluetooth, the communication indicator switches to single-blink mode. Connect to the SolarGo app within 5 minutes; otherwise, Bluetooth will turn off automatically. • The single-blink state of the communication indicator appears only after Bluetooth is enabled by double-clicking the Reload button.

Indicator light	Status	Description
Power light 		Steady on: The Smart Communication Stick is powered on.
		Off: The Smart Communication Stick is not powered on
		Steady on: Communication is normal in Wi-Fi mode or LAN mode.

Indicator light	Status	Description
Communication indicator		Single flash: The Bluetooth signal of the Smart Communication Stick is enabled, waiting to connect to the SolarGo app.
		Two flashes: The Smart Communication Stick is Not Connected to the router.
		Four flashes: The Smart Communication Stick communicates normally with the router, but is Not Connected to the server.
		Six flashes: The Smart Communication Stick is identifying connected devices.
		Off: The Smart Communication Stick is in software reset or not powered.

Indicator light	Color	Status	Description
LAN port communication LED 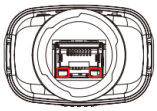	Green	Steady on	100 Mbps wired network connection is normal.
		Off	• Network cable is Not Connected. • 100 Mbps wired network connection is abnormal. • 10 Mbps wired network connection is normal.
	Yellow	Steady on	10/100 Mbps wired network connection is normal, with no communication data transmission or reception.
		Flashing	Communication data is being transmitted and received.
		Off	Network cable is Not Connected.

button	Description
Reload	Press and hold for 0.5–3 seconds; the Smart Communication Stick will reset.
	Press and hold for 6–20 seconds; the Smart Communication Stick will restore factory settings.

button	Description
	Quickly double-click to enable the Bluetooth signal (maintained for only 5 minutes).

- **4G Kit-CN-G20 & 4G Kit-CN-G21**

Indicator light	Status	Description
		Steady on: The Smart Communication Stick is powered on.
		Off: The Smart Communication Stick is not powered.
		Steady on: The Smart Communication Stick is connected to the server, and communication is normal.
		Double flash: The Smart Communication Stick is Not Connected to the communication base station.
		Four flashes: The Smart Communication Stick is connected to the communication base station but Not Connected to the server.
		Six flashes: Communication between the Smart Communication Stick and the inverter is disconnected.
		Off: The Smart Communication Stick is in software reset or not powered.

button	Description
RELOAD	Press and hold for 0.5–3 seconds; the Smart Communication Stick will restart.
	Press and hold for 6–20 seconds; the Smart Communication Stick will restore factory settings.

- **LS4G Kit-CN、4G Kit-CN**

Indicator light	Color	Status	Description
	Green	On	Module is fastened and powered.

Power light 		Off	Module is not fastened or not powered.
Communication indicator 	Blue	Slow flash (0.2s on,1.8soff)	• Inverter communication LED2flashes: dialing, searching for network • Inverter communication LED4flashes: connection to cloud failed due to no data traffic
		Slow flash (1.8ss on,0.2soff)	• Inverter communication LED2flashes: Dial-up successful • Inverter communication indicator steady on: Cloud connection successful • Inverter communication LED4flashes: connection to cloud failed due to no data traffic
		Fast flashing (0.125ss on,0.125soff)	The inverter is communicating with the cloud through the module
		0.2ss on,8sOff	Not installedSIMcard orSIMcard has poor contact

- **Ezlink3000**

Indicator light/Silkscreen	Color	Status	Description
Power light 	Blue		Flashing: The communication stick is operating normally.
			Off: The communication stick is powered off.
	Green		Steady on: The communication stick is connected to the server.
			Double flash: The communication stick is Not Connected to the router.

Communication indicator			Four flashes: The communication stick is connected to the router and Not Connected to the server.
RELOAD	-	-	Press briefly for1-3seconds to restart the communication stick. Press and hold for6-10seconds to restore factory settings. Quickly double-press to enable the Bluetooth signal (maintained for only5minutes).

7 System Commissioning and Power Plant Monitoring

7.1 Conduct Device Commissioning and Testing and Plant Monitoring via the SEMS+ App

The SEMS+ App is software for remote plant monitoring or local device commissioning and testing. It supports installers or owners:

- Remotely monitor plant operation and set plant and device operating parameters.
- Connect to devices locally to view device operating status and set device parameters.

Download and install the SEMS+ App
Phone requirements:

- Phone operating system requirements: Android 7.0 or later, and iOS 15.1 or later.
- The phone supports a web browser and Internet access.
- The phone supports WLAN/Bluetooth.

Download methods:
Method 1:
Search for SEMS+ in Google Play, the App Store, and the Huawei, HONOR, Xiaomi, OPPO, and vivo app stores to download and install it.



SEMS0163

Method 2:
Scan the QR code below to download and install.

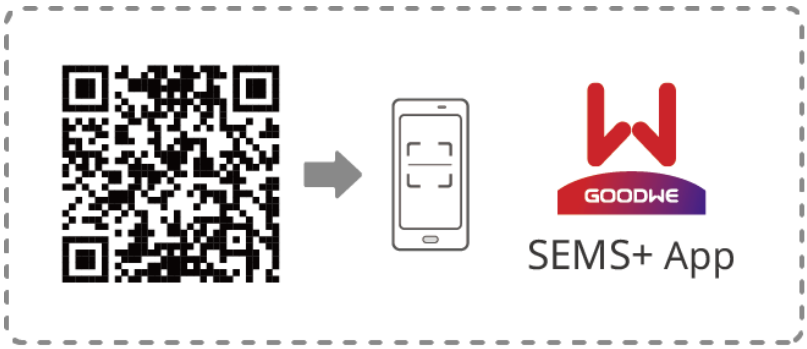

SEMS0164

For detailed functions, refer to theSEMS+ App User Manual. The user manual can be obtained from the official website or by scanning the QR code below.

SEMS+ App User Manual

7.2 Conduct Device Commissioning and Testing and Plant Monitoring via SEMS+ WEB

SEMS+ WEB is a monitoring platform that can communicate via WiFi or LAN. The common functions of SEMS+ WEB are as follows:

1. Manage organization or user information, etc.
2. Add and monitor plant information, etc.
3. Maintain devices.

For detailed functions, refer to theSEMS+ WEB User Manual。



SEMS+ WEB User Manual

8 System Maintenance

8.1 System Power-Off

⚠DANGER

- When performing operation and maintenance on equipment in the system, power off the system. Operating equipment while energized may cause equipment damage or electric shock hazards.
- After the equipment is powered off, internal components require time to discharge. Wait until the equipment is fully discharged according to the time specified on the label.
- The battery should be restarted by powering on via the air circuit breaker.
- When shutting down the battery system, strictly follow the battery system power-off requirements to prevent damage to the battery system.
- When there are multiple batteries in the system, powering off any one battery powers off all batteries.

NOTICE

- Circuit breakers between the inverter and the battery and between battery systems must be installed in accordance with local laws and regulations.
- To ensure effective protection of the battery system, keep the cover of the battery system switch closed; the protective cover can close automatically after being opened. If the battery system switch is not used for a long time, secure it with screws.

Single-unit scenario

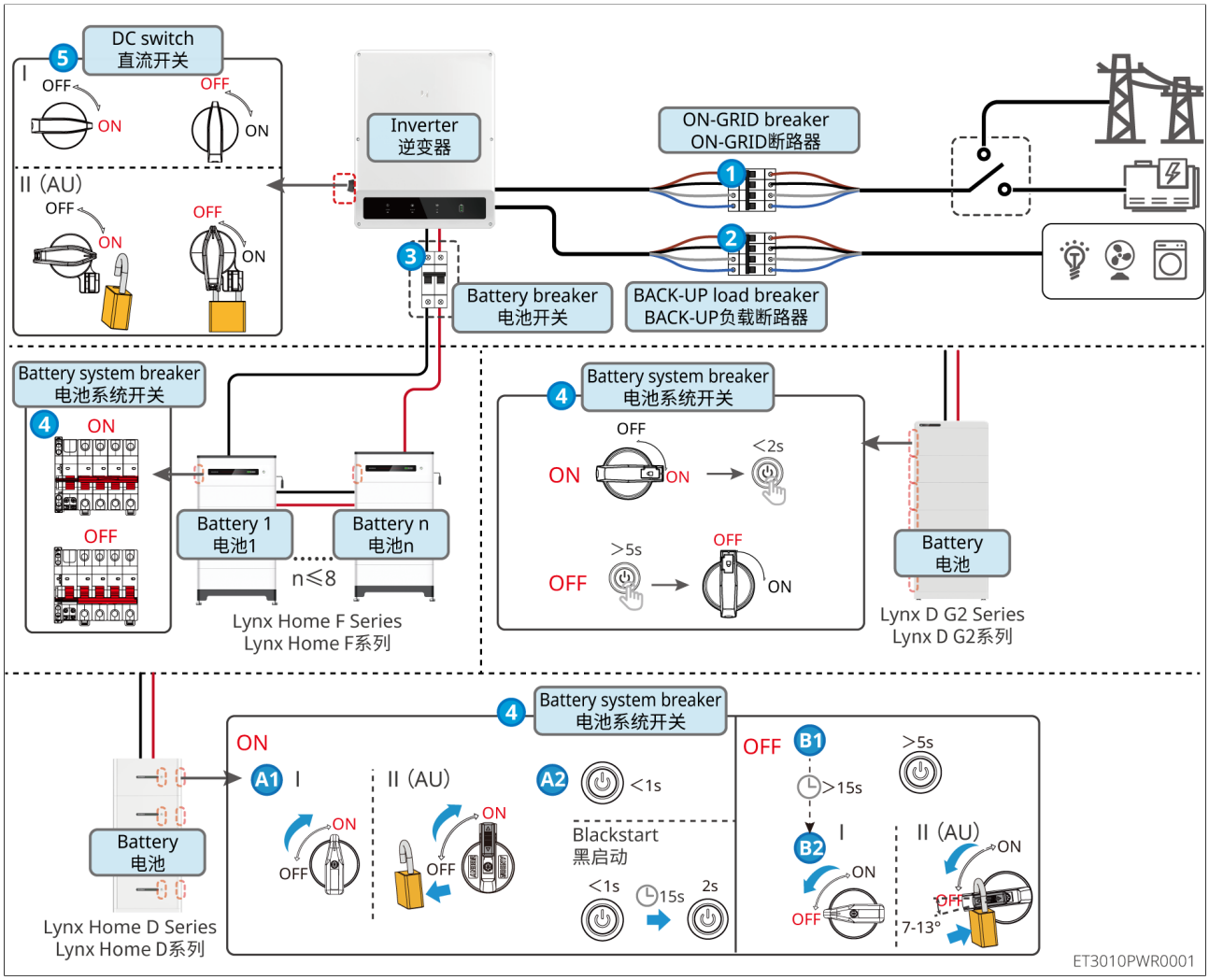

Power-off procedure:

❷→❶→❸→❹→❺

❸: Optional according to local laws and regulations.

Parallel operation scenario

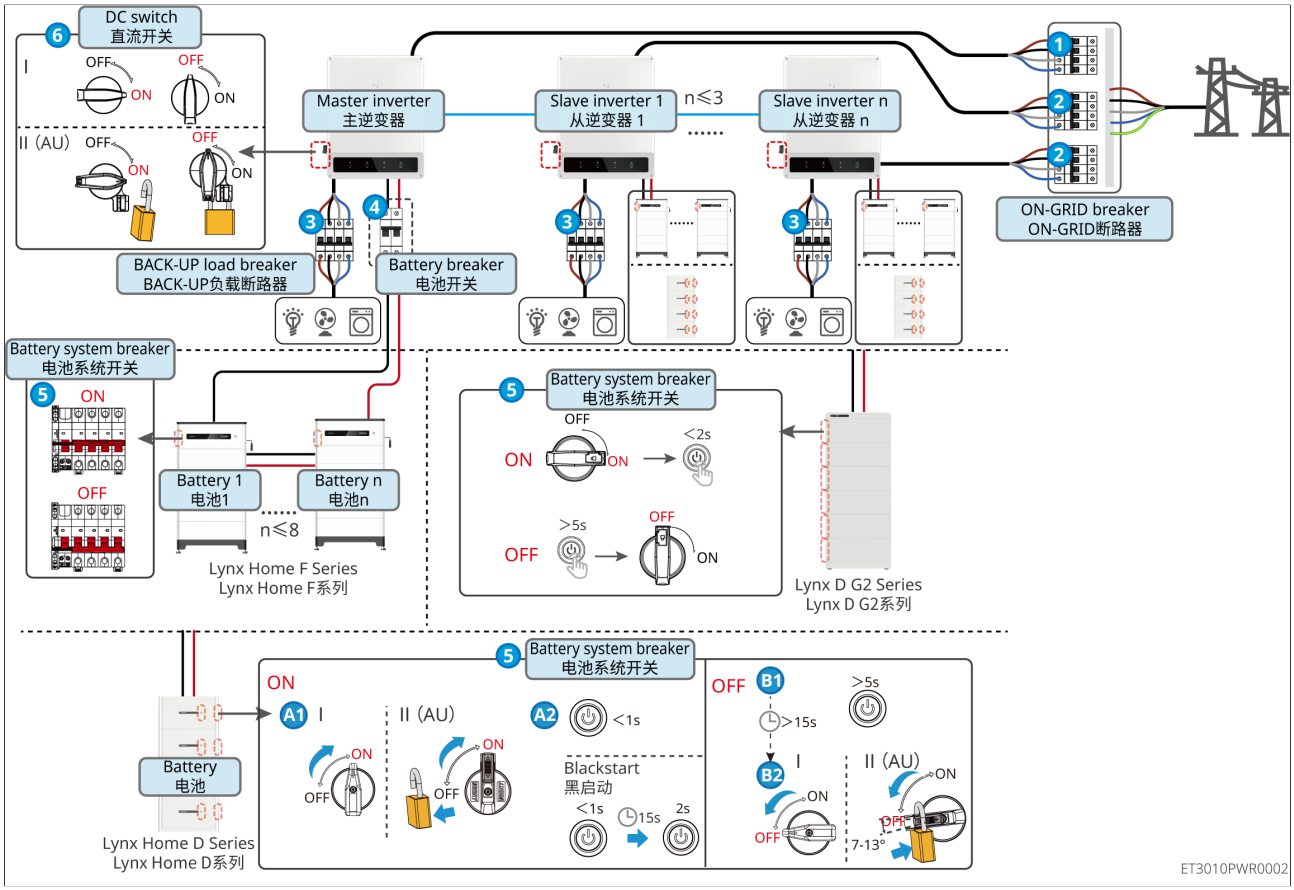

Power-off procedure:

❸→❶→❷→❹→❺→❻

❹: Optional according to local laws and regulations.

8.2 Equipment Removal

DANGER

- Ensure the equipment is powered off.
- When operating the equipment, wear personal protective equipment (PPE).
- When removing wiring terminals, use proper removal tools to avoid damaging the terminals or equipment.
- Unless otherwise specified, the equipment disassembly procedure is the reverse of the installation procedure and is not repeated in this document.

1. Power off the system.
2. Use labels to mark the cable types of the cables connected in the system.
3. Disconnect the connecting cables of the inverters, batteries, and smart meters in the system, such as DC cables, AC cables, communication cables, and Protection ground cables.
4. Remove devices such as smart communication sticks, inverters, batteries, and smart meters.
5. Store the equipment properly. If it will be put into use later, ensure that the storage conditions meet the requirements.

8.3 Equipment Scrapping

When the equipment cannot continue to be used and needs to be scrapped, dispose of it in accordance with the electrical waste disposal requirements of the laws and regulations of the country/region where the equipment is located. Do not dispose of the equipment as household waste.

8.4 Periodic Maintenance

⚠WARNING

- If any problem that may affect the battery or energy storage inverter system is found, contact after-sales personnel. Unauthorized disassembly is prohibited.
- If exposed copper wires inside the conductive cable are found, do not touch them. High voltage hazard. Contact after-sales personnel. Unauthorized disassembly is prohibited.
- If other emergencies occur, contact after-sales personnel immediately, operate under the guidance of after-sales personnel, or wait for after-sales personnel to perform on-site operations.

Maintenance Item	Maintenance Method	Maintenance Interval	Maintenance Purpose
System Cleaning	Check the heat sinks, fans, and air inlets/outlets for foreign objects and dust. Check whether the installation space meets the requirements, and check whether debris has accumulated around the equipment.	Once every 6 months	Prevent heat dissipation faults.
System Installation	Check whether the equipment is installed securely and whether the fastening screws are loose Check the equipment appearance for damage and deformation.	Once every 6 months to once a year	Confirm that the equipment is installed securely.
Electrical Connections	Check whether the electrical connections are loose, whether the cable appearance is damaged, and whether exposed copper is present.	Once every 6 months to once a year	Verify the reliability of electrical connections.
Seal integrity	Check whether the sealing performance of the equipment cable entry holes meets the requirements. If the gaps are too large or the holes are not sealed, re-seal them.	Once per year	Confirm that the machine is properly sealed and its waterproof performance is intact.
Battery maintenance	If the battery has not been used or fully charged for a long time, it is recommended to charge the battery periodically.	Once every 15 days	Protection of battery service life.

8.5 Fault

NOTICE
The fault information in this manual is updated from time to time. Faults vary slightly among different models. Please refer to the real-time display on the device.

8.5.1 View Fault/Alarm Details

All fault and alarm details of the energy storage system are displayed in [SEMS+ App] and [SEMS+ WEB]. If your product is abnormal and no related fault information is found in [SEMS+ App] and [SEMS+ WEB], please contact the after-sales service center.

- SEMS+ App

1. Open the SEMS App and log in with any account.
2. Go to [Plant] > [Alarm] to view fault information for all plants.
3. Click a specific fault name to view the time of fault occurrence, possible causes, and solutions.

- SEMS+ WEB

1. Open SEMS+ WEB and log in with any account.
2. On the plant details page, click [Alarm] to view all alarm information of the current plant.

8.5.2 Fault Information and Handling Methods

Please troubleshoot according to the following methods. If the troubleshooting methods do not help you, please contact the after-sales service center.
When contacting the after-sales service center, please collect the following information to facilitate quick problem resolution.

1. Product information, such as serial number, software version, equipment installation time, fault occurrence time, fault occurrence frequency, etc.
2. Equipment installation environment, such as weather conditions, whether the PV modules are shaded or have shadows, etc. For the installation environment, it is recommended to provide photos, videos, and other files to assist in problem analysis.
3. Grid conditions.

8.5.2.1 System Fault

If an unlisted problem occurs in the system, or if the problem or abnormality still cannot be stopped after following the instructions, stop system operation immediately and contact your dealer immediately.

No.	Fault	Corrective Measures
1	Unable to find the smart communication stick wireless signal	1. Ensure that no other devices are connected to the smart communication stick wireless signal. 2. Ensure that the App has been updated to the latest version. 3. Ensure the smart communication dongle is powered properly and the blue signal indicator is flashing or steadily on. 4. Ensure the smart device is within the communication range of the smart communication dongle. 5. Refresh the device list in the App again. 6. Restart the inverter.
2	Unable to connect to the wireless signal of the smart communication dongle	1. Ensure that no other devices are connected to the smart communication stick wireless signal. 2. Restart the inverter or communication dongle, and try connecting to the wireless signal of the smart communication dongle again. 3. Ensure Bluetooth encrypted pairing is successful.
3	Unable to find the router SSID	1. Place the router closer to the smart communication dongle, or add a WiFi repeater to strengthen the WiFi signal. 2. Reduce the number of devices connected to the router.

No.	Fault	Corrective Measures
4	After all configurations are complete, the smart communication dongle fails to connect to the router	1. Restart the inverter. 2. Check whether the network name, encryption method, and password in the WiFi configuration are the same as those of the router. 3. Restart the router. 4. Place the router closer to the smart communication dongle, or add a WiFi repeater to strengthen the WiFi signal.
5	After all configurations are complete, the smart communication dongle fails to connect to the server	Restart the router and inverter.

8.5.2.2 Inverter Fault

8.5.2.2.1 Fault Handling (Fault Codes F01-F40)

Fault Code	Fault Name	Fault Cause	Recommended Troubleshooting
F01	Grid Power Outage	1. Grid power outage. 2. The AC line or AC Switch is disconnected.	1. The alarm automatically clears after grid power supply is restored. 2. Check whether the AC line or AC Switch is disconnected.

Fault Code	Fault Name	Fault Cause	Recommended Troubleshooting
F02	Grid Overvoltage Protection	The grid voltage is higher than the allowable range, or the high-voltage Duration exceeds the High Voltage Ride-Through setting value.	1. If it occurs occasionally, it may be a short-term grid abnormality. The inverter will resume normal operation after detecting that the grid is normal, and no manual intervention is required. 2. If it occurs frequently, check whether the grid voltage is within the allowable range. If not, contact the local power operator. If yes, the Grid Overvoltage Protection point also needs to be modified after obtaining consent from the local power operator. 3. If it cannot recover for a long time, check whether the AC-side circuit breaker and output cables are connected properly.

Fault Code	Fault Name	Fault Cause	Recommended Troubleshooting
F03	Grid Undervoltage Protection	The grid voltage is lower than the allowable range, or the Duration of Low Voltage exceeds the Low Voltage Ride-Through setting value.	1. If it occurs occasionally, it may be a short-term grid abnormality. The inverter will resume normal operation after detecting that the grid is normal, and no manual intervention is required. 2. If it occurs frequently, check whether the grid voltage is within the allowable range. If not, contact the local power operator. If yes, the Grid Undervoltage Protection point also needs to be modified after obtaining consent from the local power operator. 3. If it cannot recover for a long time, check whether the AC-side circuit breaker and output cables are connected properly.

Fault Code	Fault Name	Fault Cause	Recommended Troubleshooting
F04	Grid Rapid Overvoltage Protection	An abnormality in grid voltage detection or an extremely high voltage triggers the fault.	1. If it occurs occasionally, it may be a short-term grid abnormality. The inverter will resume normal operation after detecting that the grid is normal, and no manual intervention is required. 2. If it occurs frequently, check whether the grid voltage is within the allowable range. If not, contact the local power operator. If yes, the Grid Undervoltage Protection point also needs to be modified after obtaining consent from the local power operator. 3. If it cannot recover for a long time, check whether the AC-side circuit breaker and output cables are connected properly.
F05	10minOvervoltage	Within10min, the sliding average value of the grid voltage exceeds the range specified by the safety regulations.	Check whether the grid voltage has been operating at a high voltage for a long time. If it occurs frequently, check whether the grid frequency is within the allowable range. If not, contact the local power operator. If yes, after obtaining consent from the local power operator, modify the Grid10minOvervoltage point.

Fault Code	Fault Name	Fault Cause	Recommended Troubleshooting
F06	Grid Overfrequency	Grid abnormality: the actual grid frequency is higher than the local grid standard requirement.	1. If it occurs occasionally, it may be a short-term grid abnormality. The inverter will resume normal operation after detecting that the grid is normal, and no manual intervention is required. 2. If it occurs frequently, check whether the grid frequency is within the allowable range. If not, contact the local power operator. If yes, the Grid Overfrequency protection point also needs to be modified after obtaining consent from the local power operator.
F07	Grid Underfrequency	Grid abnormality: the actual grid frequency is lower than the local grid standard requirement.	1. If it occurs occasionally, it may be a short-term grid abnormality. The inverter will resume normal operation after detecting that the grid is normal, and no manual intervention is required. 2. If it occurs frequently, check whether the grid frequency is within the allowable range. If not, contact the local power operator. If yes, the Grid Underfrequency protection point also needs to be modified after obtaining consent from the local power operator.

Fault Code	Fault Name	Fault Cause	Recommended Troubleshooting
F08	Grid Frequency Instability	Grid Abnormal: The actual grid frequency rate of change does not comply with local grid standards.	1. If it occurs occasionally, it may be a short-term grid abnormality. The inverter will resume normal operation after detecting that the grid is normal, and no manual intervention is required. 2. If it occurs frequently, check whether the grid frequency is within the permitted range; if not, contact the local power utility.
F09	Anti-islanding Protection	The grid has been disconnected. The grid voltage is maintained due to the presence of loads. Stop grid connection according to safety regulation Protection requirements.	1. If it occurs occasionally, it may be a short-term grid abnormality. The inverter will resume normal operation after detecting that the grid is normal, and no manual intervention is required. 2. If it occurs frequently, check whether the grid frequency is within the permitted range; if not, contact the local power utility.
F10	Voltage Ride-Through Undervoltage Fault	Grid Abnormal: The duration of Grid Voltage Abnormal exceeds the time specified for high- and low-voltage ride-through.	1. If it occurs occasionally, it may be a short-term grid abnormality. The inverter will resume normal operation after detecting that the grid is normal, and no manual intervention is required. 2. If it occurs frequently, check whether the grid voltage and frequency are within the permitted range and stable; if not, contact the local power utility.

Fault Code	Fault Name	Fault Cause	Recommended Troubleshooting
F11	HVRT Overvoltage	Grid Abnormal: The duration of Grid Voltage Abnormal exceeds the time specified for high- and low-voltage ride-through.	1. If it occurs occasionally, it may be a short-term grid abnormality. The inverter will resume normal operation after detecting that the grid is normal, and no manual intervention is required. 2. If it occurs frequently, check whether the grid voltage and frequency are within the permitted range and stable; if not, contact the local power utility.
F12	30mAGfciProtection	During inverter operation, the input-to-ground insulation resistance becomes low.	1. If it occurs occasionally, it may be caused by an occasional external line abnormality. After the fault is cleared, normal operation will resume without manual intervention. 2. If it occurs frequently or cannot be recovered for a long time, check whether the PV string-to-ground impedance is too low.
F13	60mAGfciProtection	During inverter operation, the input-to-ground insulation resistance becomes low.	1. If it occurs occasionally, it may be caused by an occasional external line abnormality. After the fault is cleared, normal operation will resume without manual intervention. 2. If it occurs frequently or cannot be recovered for a long time, check whether the PV string-to-ground impedance is too low.

Fault Code	Fault Name	Fault Cause	Recommended Troubleshooting
F14	150mAGfciProtection	During inverter operation, the input-to-ground insulation resistance becomes low.	1. If it occurs occasionally, it may be caused by an occasional external line abnormality. After the fault is cleared, normal operation will resume without manual intervention. 2. If it occurs frequently or cannot be recovered for a long time, check whether the PV string-to-ground impedance is too low.
F15	GfciSlow-change Protection	During inverter operation, the input-to-ground insulation resistance becomes low.	1. If it occurs occasionally, it may be caused by an occasional external line abnormality. After the fault is cleared, normal operation will resume without manual intervention. 2. If it occurs frequently or cannot be recovered for a long time, check whether the PV string-to-ground impedance is too low.
F16	DCIProtection Level1	High DC Component: The DC component of the inverter output current is higher than the safety regulation or machine default allowable range.	1. If the abnormality is caused by an external fault, the inverter will automatically resume normal operation after the fault disappears, without manual intervention. 2. If this alarm occurs frequently and affects the normal power generation of the plant, contact your distributor or after-sales service center.

Fault Code	Fault Name	Fault Cause	Recommended Troubleshooting
F17	DCIProtection Level2	High DC Component: The DC component of the inverter output current is higher than the safety regulation or machine default allowable range.	1. If the abnormality is caused by an external fault, the inverter will automatically resume normal operation after the fault disappears, without manual intervention. 2. If this alarm occurs frequently and affects the normal power generation of the plant, contact your distributor or after-sales service center.

Fault Code	Fault Name	Fault Cause	Recommended Troubleshooting
F18	Low Insulation Resistance	1. PV string is short-circuited to protective earth (Protection). 2. The environment where the PV strings are installed is humid for a long time, and the line-to-ground insulation is poor. 3. Low Insulation Resistance of the battery port line to ground.	1. Check the impedance of the PV string/battery port to protective earth (Protection); if a short circuit occurs, identify and rectify the short-circuit point. 2. Check whether the inverter's protective earth conductor (Protection) is correctly connected. 3. If it is confirmed that this impedance is indeed lower than the default value in rainy weather, please use Appto reset the inverter“Insulation Resistance Protection Point”。 Inverters for the Australian and New Zealand markets，when an insulation resistance fault occurs, alarms can also be provided in the following ways: 1. The inverter is equipped with a buzzer. When a fault occurs, the buzzer sounds continuously for1minute; if the fault is not resolved, the buzzer sounds again every30minutes. 2. If the inverter is added to the monitoring platform and the alarm notification method is set, alarm information can be sent to the customer by email.

Fault Code	Fault Name	Fault Cause	Recommended Troubleshooting
F19	Grounding Abnormal	1. The inverter's Protection ground wire is Not Connected. 2. When the PV string output is grounded, the inverter output side is not connected to an isolation transformer.	1. Please confirm whether the inverter's Protection ground wire is Not Connected properly. 2. If the PV string output is grounded, please confirm whether the inverter output side is connected to an isolation transformer.
F20	Hard Power Limit Protection	Abnormal load fluctuation	1. If the abnormality is caused by an external fault, the inverter will automatically resume normal operation after the fault disappears, without manual intervention. 2. If this alarm occurs frequently and affects the normal power generation of the plant, contact your distributor or after-sales service center.

Fault Code	Fault Name	Fault Cause	Recommended Troubleshooting
F21	Internal Comm Loss	SlaveDSP1communication timeout-MasterDSP, SlaveDSP2communication timeout-MasterDSP, SlaveDSP2communication timeout-SlaveDSP1, MasterDSPcommunication timeout-SlaveDSP1, MasterDSPcommunication timeout-SlaveDSP2or SlaveDSP1communication timeout-SlaveDSP2: 1. Chip not powered on 2. Chip program version error	Disconnect the AC output side switch and the DC input side switch,5 minutes later, close the AC output side switch and the DC input side switch. If the fault persists, please contact the distributor or after-sales service center.

Fault Code	Fault Name	Fault Cause	Recommended Troubleshooting
		MasterDSPcanmodule error, SlaveDSP1canmodule error or SlaveDSP2canmodule error: 1. Frame format error 2. Parity check error 3. can busoffline 4. HardwareCRCcheck error 5. When sending (receiving), the control bit is receiving (sending). 6. Transmission to an unauthorized unit	
F22	Generator waveform detection fault	1. If the generator is Not Connected, this fault will be displayed continuously; 2. When the generator is operating, non-compliance with generator safety regulations will trigger this fault.	
F23	Abnormal generator connection		
F24	Generator voltage low		
F25	Generator voltage high		
F26	Generator frequency low		

Fault Code	Fault Name	Fault Cause	Recommended Troubleshooting
F27	Generator frequency high		1. If the generator is not connected, ignore this fault; 2. It is normal for this fault to appear when the generator has a fault. After the generator recovers, wait for a period of time; the fault will be cleared automatically; 3. This fault will not affect normal operation in off-grid mode 4. If the generator and the grid are connected at the same time and meet safety regulation requirements, the grid will be given priority for grid connection, and the system will operate in grid-connected mode.
F28	Parallel operationI/O self-check abnormal	Parallel communication cable is not securely connected or parallelIOchip is damaged	Check whether the parallel communication cable is securely connected, then check whether theIOchip is damaged; if so, replace theIOchip.
F29	Paralell Grid Line Reversed	Grid lines of some units are connected in reverse relative to others.	Reconnect the grid lines.
F30	AC HCT check Abnormal	The AC HCT has abnormal sampling.	Disconnect the AC output side switch and the DC input side switch,5 minutes later, close the AC output side switch and the DC input side switch. If the fault persists, please contact the distributor or after-sales service center.

Fault Code	Fault Name	Fault Cause	Recommended Troubleshooting
F31	GFCI HCT Check Abnormal	The GFCI HCT has abnormal sampling.	Disconnect the AC output side switch and the DC input side switch,5 minutes later, close the AC output side switch and the DC input side switch. If the fault persists, please contact the distributor or after-sales service center.
F32	Inverter Internal Failure	The inverter has a fault.	Disconnect the AC output side switch and the DC input side switch,5 minutes later, close the AC output side switch and the DC input side switch. If the fault persists, please contact the distributor or after-sales service center.
F33	FlashR/W Abnormal	Possible causes: flashcontent has changed;flashlife has been exhausted;	1. Upgrade to the latest firmware; 2. Contact your dealer or after-sales service center.
F34	AFCI Check Failure	During the Arc Failure self-check, the Arc Failure module did not detect an Arc Failure as expected.	Disconnect the AC output side switch and the DC input side switch,5 minutes later, close the AC output side switch and the DC input side switch. If the fault persists, please contact the distributor or after-sales service center.

Fault Code	Fault Name	Fault Cause	Recommended Troubleshooting
F35	Cabinet Overtemperature	Cabinet Overtemperature, possible causes: 1. The inverter installation location is not ventilated. 2. Ambient Overtemperature. 3. The internal fan is operating abnormally.	1. Check whether the ventilation at the inverter installation location is good and whether the ambient temperature exceeds the maximum allowable ambient temperature range. 2. If the location is not ventilated or Ambient Overtemperature occurs, improve its ventilation and heat dissipation. 3. If ventilation and ambient temperature are both normal, contact your dealer or after-sales service center.

Fault Code	Fault Name	Fault Cause	Recommended Troubleshooting
F36	Bus Overvoltage	BUSOvervoltage, possible causes: 1. PVvoltage too high; 2. InverterBUSvoltage sampling abnormality; 3. The isolation performance of the downstream dual-split transformer of the inverter is poor, causing mutual interference between two inverters during grid connection, and one of the inverters reports DC overvoltage when connecting to the grid;	Disconnect the AC output side switch and the DC input side switch,5 minutes later, close the AC output side switch and the DC input side switch. If the fault persists, please contact the distributor or after-sales service center.

Fault Code	Fault Name	Fault Cause	Recommended Troubleshooting
F37	PVInput Overvoltage	PVinput voltage too high, possible causes: The PV array is configured incorrectly, with too many PV modules connected in series in a string, causing the string open-circuit voltage to exceed the inverter's maximum operating voltage	Check the series configuration of the corresponding PV array strings to ensure that the string open-circuit voltage does not exceed the inverter's maximum operating voltage. After the PV array is correctly configured, the inverter alarm will automatically clear.
F38	PVContinuous Hardware Overcurrent	1. Improper module configuration 2. Hardware damage	Disconnect the AC output side switch and the DC input side switch,5minutes later, close the AC output side switch and the DC input side switch. If the fault persists, please contact the distributor or after-sales service center.
F39	PVContinuous Software Overcurrent	1. Improper module configuration 2. Hardware damage	Disconnect the AC output side switch and the DC input side switch,5minutes later, close the AC output side switch and the DC input side switch. If the fault persists, please contact the distributor or after-sales service center.

Fault Code	Fault Name	Fault Cause	Recommended Troubleshooting
F40, F98	String Reverse Connection （String1-n) n: Determine according to the actual Number of Strings of the inverter	PVString Reverse Connection	Check whether the strings are reversely connected.

8.5.2.2.2 Troubleshooting (Fault Codes F41-F80)

Fault Code	Fault Name	Fault Cause	Recommended Troubleshooting
F41	Generator Port Overload	1. The off-grid side output exceeds the requirements specified in the datasheet. 2. Off-grid side short circuit 3. Off-grid terminal voltage too low 4. When used as a large-load port, the large load exceeds the requirements specified in the datasheet.	Use the data to confirm the off-grid output voltage, current, power, and other data, and identify the cause of the problem.

Fault Code	Fault Name	Fault Cause	Recommended Troubleshooting
F42，F164,F165	DC Arcing Failure（String1-n) n: Determine according to the actual Number of Strings of the inverter	1. DC-side connection terminal is loose; 2. DC-side connection terminal has poor contact; 3. DC cable core is damaged and has poor contact	1. After the unit is reconnected to the grid, check whether the voltage and current of each channel abnormally decrease to zero; 2. Check whether the DC-side terminals are securely connected.
F43	Grid Waveform Abnormal	Grid Abnormal: Abnormal grid voltage detection triggered the fault.	1. If it occurs occasionally, it may be a short-term grid abnormality. The inverter will resume normal operation after detecting that the grid is normal, and no manual intervention is required. 2. If it occurs frequently, check whether the grid voltage and frequency are within the permitted range and stable; if not, contact the local power utility.
F44	Grid Phase Loss	Grid Abnormal: A single-phase voltage sag occurred in the grid voltage.	1. If it occurs occasionally, it may be a short-term grid abnormality. The inverter will resume normal operation after detecting that the grid is normal, and no manual intervention is required. 2. If it occurs frequently, check whether the grid voltage and frequency are within the permitted range and stable; if not, contact the local power utility.

Fault Code	Fault Name	Fault Cause	Recommended Troubleshooting
F45	Grid Voltage Imbalance	Grid phase voltage difference is excessive.	1. If it occurs occasionally, it may be a short-term grid abnormality. The inverter will resume normal operation after detecting that the grid is normal, and no manual intervention is required. 2. If it occurs frequently, check whether the grid voltage and frequency are within the permitted range and stable; if not, contact the local power utility.
F46	Grid Phase Sequence Failure	Inverter and grid wiring abnormal: wiring is not in positive phase sequence.	1. Check whether the wiring between the inverter and the grid is in positive phase sequence. After the wiring is correct (e.g., swap any two live wires), the fault will automatically disappear. 2. If the wiring is correct and the fault persists, please contact your dealer or after-sales service center.
F47	Grid Rapid Shutdown Protection	Rapidly shut down the output after a Grid Power Outage condition is detected.	The fault automatically clears after grid power supply is restored.
F48	Grid Neutral Wire Loss (Splitgrid)	Split-phase Grid Neutral Wire Loss	1. The alarm automatically clears after grid power supply is restored. 2. Check whether the AC line or AC Switch is disconnected.
F49	L-PE Short Circuit	Output phase line toPEimpedance is low or short-circuited.	Check the output phase line toPEimpedance and find the location with low impedance and repair it.

Fault Code	Fault Name	Fault Cause	Recommended Troubleshooting
F50	DCVProtection Level1	Abnormal load fluctuation	1. If the abnormality is caused by an external fault, the inverter will automatically resume normal operation after the fault disappears, without manual intervention. 2. If this alarm occurs frequently and affects the normal power generation of the plant, contact your distributor or after-sales service center.
F51	DCVProtection Level2	Abnormal load fluctuation	
F52	Leakage current (GFCI) shutdown after multiple faults	North American safety regulations require that after multiple faults, automatic recovery is not allowed; manual recovery is required, or wait24hfor recovery.	Please check whether the PV string-to-ground impedance is too low.
F53	DC Arc Failure (AFCI) shutdown after multiple faults	North American safety regulations require that after multiple faults, automatic recovery is not allowed; manual recovery is required, or wait24hfor recovery.	1. After the unit is reconnected to the grid, check whether the voltage and current of each channel abnormally decrease to zero; 2. Check whether the DC-side terminals are securely connected.

Fault Code	Fault Name	Fault Cause	Recommended Troubleshooting
F54	External communication link loss	Communication with external devices of the inverter is lost; possible causes include peripheral power supply issues, Communication Protocols mismatch, or corresponding peripherals not being configured.	Determine based on the actual model and detection enable bit; peripherals not supported by some models will not be detected.
F55	Back-upOutput Overload	Prevent continuous Overload output from the inverter.	Turn off some off-grid loads to reduce the inverter's off-grid output power.
F56	Back-upOutput Overvoltage	Prevent load damage caused by inverter output overvoltage.	1. If it occurs occasionally, it may be caused by load switching and does not require manual intervention. 2. If it occurs frequently, please contact your dealer or after-sales service center.
F57	ExternalBox Fault	During Switch On-Grid to Off-Grid, the wait forBoxrelay switching is too long.	1. Check whetherBoxis operating normally; 2. Check whetherBoxcommunication wiring is correct;
F58	CTLoss	CTconnection line disconnected (Japanese safety regulation requirement)	Check whetherCTwiring is correct;
F59	Parallel operationCANComm Abnormal	The parallel communication cable is not securely connected, or some units are offline.	Check whether all units are powered on and whether the parallel communication cable is securely connected.

Fault Code	Fault Name	Fault Cause	Recommended Troubleshooting
F60	Parallel operationBack-upLine Reversed	Some units'backuplines are reversed with others.	Reconnect thebackuplines.
F61	Inverter Soft Start Failure	Inverter Soft Start Failure during off-grid cold start	Check whether the inverter module of the unit is damaged.
F62	AC HCT Failure	HCTsensor is abnormal.	Disconnect the AC output side switch and the DC input side switch,5 minutes later, close the AC output side switch and the DC input side switch. If the fault persists, please contact the distributor or after-sales service center.
F63	GFCI HCT Failure	Leakage current sensor abnormality	Disconnect the AC output side switch and the DC input side switch,5 minutes later, close the AC output side switch and the DC input side switch. If the fault persists, please contact the distributor or after-sales service center.
F64	Inverter Internal Failure	The inverter has a fault.	Disconnect the AC output side switch and the DC input side switch,5 minutes later, close the AC output side switch and the DC input side switch. If the fault persists, please contact the distributor or after-sales service center.

Fault Code	Fault Name	Fault Cause	Recommended Troubleshooting
F65	AC Terminal Overtemperature	AC Terminal Overtemperature, possible causes: 1. The inverter installation location is not ventilated. 2. Ambient Overtemperature. 3. The internal fan is operating abnormally.	1. Check whether the ventilation at the inverter installation location is good and whether the ambient temperature exceeds the maximum allowable ambient temperature range. 2. If the location is not ventilated or Ambient Overtemperature occurs, improve its ventilation and heat dissipation. 3. If ventilation and ambient temperature are both normal, contact your dealer or after-sales service center.
F66	INVModule Overtemperature	Inverter module overtemperature, possible causes: 1. The inverter installation location is not ventilated. 2. Ambient Overtemperature. 3. The internal fan is operating abnormally.	1. Check whether the ventilation at the inverter installation location is good and whether the ambient temperature exceeds the maximum allowable ambient temperature range. 2. If the location is not ventilated or Ambient Overtemperature occurs, improve its ventilation and heat dissipation. 3. If ventilation and ambient temperature are both normal, contact your dealer or after-sales service center.

Fault Code	Fault Name	Fault Cause	Recommended Troubleshooting
F67	BoostModule Overtemperature	BoostModule Overtemperature, possible causes: 1. The inverter installation location is not ventilated. 2. Ambient Overtemperature. 3. The internal fan is operating abnormally.	1. Check whether the ventilation at the inverter installation location is good and whether the ambient temperature exceeds the maximum allowable ambient temperature range. 2. If the location is not ventilated or Ambient Overtemperature occurs, improve its ventilation and heat dissipation. 3. If ventilation and ambient temperature are both normal, contact your dealer or after-sales service center.
F68	AC Capacitor Overtemperature	Output filter capacitor overtemperature, possible causes: 1. The inverter installation location is not ventilated. 2. Ambient Overtemperature. 3. The internal fan is operating abnormally.	1. Check whether the ventilation at the inverter installation location is good and whether the ambient temperature exceeds the maximum allowable ambient temperature range. 2. If the location is not ventilated or Ambient Overtemperature occurs, improve its ventilation and heat dissipation. 3. If ventilation and ambient temperature are both normal, contact your dealer or after-sales service center.
F69	PV IGBT short-circuit fault	Possible causes: 1. IGBTshort circuit 2. Inverter sampling circuit abnormal	

Fault Code	Fault Name	Fault Cause	Recommended Troubleshooting
F70	PV IGBTOpen Circuit	1. Software issue causing no PWM output: 2. Drive circuit abnormal: 3. IGBTopen circuit	Disconnect the AC output side switch and the DC input side switch,5 minutes later, close the AC output side switch and the DC input side switch. If the fault persists, please contact the distributor or after-sales service center.
F71	NTCAbnormal	NTCtemperature sensor abnormal	Disconnect the AC output side switch and the DC input side switch,5 minutes later, close the AC output side switch and the DC input side switch. If the fault persists, please contact the distributor or after-sales service center.
F72	PWM Abnormal	PWMabnormal waveform	Disconnect the AC output side switch and the DC input side switch,5 minutes later, close the AC output side switch and the DC input side switch. If the fault persists, please contact the distributor or after-sales service center.
F73	CPUInterrupt Abnormal	CPUinterrupt abnormal	Disconnect the AC output side switch and the DC input side switch,5 minutes later, close the AC output side switch and the DC input side switch. If the fault persists, please contact the distributor or after-sales service center.
F74	Microelectronics fault	Function Safety detected abnormality	Disconnect the AC output side switch and the DC input side switch,5 minutes later, close the AC output side switch and the DC input side switch. If the fault persists, please contact the distributor or after-sales service center.

Fault Code	Fault Name	Fault Cause	Recommended Troubleshooting
F75	PV HCTFault	boostcurrent sensor abnormal	Disconnect the AC output side switch and the DC input side switch,5 minutes later, close the AC output side switch and the DC input side switch. If the fault persists, please contact the distributor or after-sales service center.
F76	1.5VRef Abnormal	Reference circuit fault	Disconnect the AC output side switch and the DC input side switch,5 minutes later, close the AC output side switch and the DC input side switch. If the fault persists, please contact the distributor or after-sales service center.
F77	0.3VRef Abnormal	Reference circuit fault	
F78	CPLDVersion Error	CPLDVersion Error	Disconnect the AC output side switch and the DC input side switch,5 minutes later, close the AC output side switch and the DC input side switch. If the fault persists, please contact the distributor or after-sales service center.
F79	CPLDComm Failure	CPLDandDSPcommunication content error or timeout	Disconnect the AC output side switch and the DC input side switch,5 minutes later, close the AC output side switch and the DC input side switch. If the fault persists, please contact the distributor or after-sales service center.
F80	Model recognition fault	Model Recognition Error fault	Disconnect the AC output side switch and the DC input side switch,5 minutes later, close the AC output side switch and the DC input side switch. If the fault persists, please contact the distributor or after-sales service center.

8.5.2.2.3 Fault Handling (Fault Codes F81-F121)

Fault Code	Fault Name	Fault Cause	Recommended Troubleshooting
F81	P-Bus Overvoltage	BUSOvervoltage, possible causes: 1. PVvoltage too high; 2. InverterBUSvoltage sampling abnormality; 3. The isolation performance of the downstream dual-split transformer of the inverter is poor, causing mutual interference between two inverters during grid connection, and one of the inverters reports DC overvoltage when connecting to the grid;	Disconnect the AC output side switch and the DC input side switch,5 minutes later, close the AC output side switch and the DC input side switch. If the fault persists, please contact the distributor or after-sales service center.
F82	N-Bus Overvoltage		
F83	Bus Overvoltage (SecondaryCPU1)		

Fault Code	Fault Name	Fault Cause	Recommended Troubleshooting
F84	P-Bus Overvoltage (SecondaryCPU1)	BUSOvervoltage, possible causes: 1. PVvoltage too high; 2. InverterBUSvoltage sampling abnormality; 3. The isolation performance of the downstream dual-split transformer of the inverter is poor, causing mutual interference between two inverters during grid connection, and one of the inverters reports DC overvoltage when connecting to the grid;	Disconnect the AC output side switch and the DC input side switch,5 minutes later, close the AC output side switch and the DC input side switch. If the fault persists, please contact the distributor or after-sales service center.
F85	N-Bus Overvoltage (SecondaryCPU1)		
F86	Bus Overvoltage (SecondaryCPU2)		Disconnect the AC output side switch and the DC input side switch,5 minutes later, close the AC output side switch and the DC input side switch. If the fault persists, please contact the distributor or after-sales service center.
F87	P-Bus Overvoltage (SecondaryCPU2)		

Fault Code	Fault Name	Fault Cause	Recommended Troubleshooting
F88	N-Bus Overvoltage (SecondaryCPU2)	BUSOvervoltage, possible causes: 1. PVvoltage too high; 2. InverterBUSvoltage sampling abnormality; 3. The isolation performance of the downstream dual-split transformer of the inverter is poor, causing mutual interference between two inverters during grid connection, and one of the inverters reports DC overvoltage when connecting to the grid;	
F89	P-Bus Overvoltage(CPLD)		Disconnect the AC output side switch and the DC input side switch,5 minutes later, close the AC output side switch and the DC input side switch. If the fault persists, please contact the distributor or after-sales service center.

Fault Code	Fault Name	Fault Cause	Recommended Troubleshooting
F90	N-Bus Overvoltage(CPLD)	BUSOvervoltage, possible causes: 1. PVvoltage too high; 2. InverterBUSvoltage sampling abnormality; 3. The isolation performance of the downstream dual-split transformer of the inverter is poor, causing mutual interference between two inverters during grid connection, and one of the inverters reports DC overvoltage when connecting to the grid;	
F91	FlyCap Software Overvoltage	FlyCap overvoltage, possible causes: 1. PVvoltage too high; 2. Inverter FlyCap voltage sampling abnormal;	Disconnect the AC output side switch and the DC input side switch,5minutes later, close the AC output side switch and the DC input side switch. If the fault persists, please contact the distributor or after-sales service center.
F92	FlyCap Hardware Overvoltage		

Fault Code	Fault Name	Fault Cause	Recommended Troubleshooting
F93	FlyCap Undervoltage	FlyCap Undervoltage, possible causes: 1. PVenergy insufficient; 2. Inverter FlyCap voltage sampling abnormal;	Disconnect the AC output side switch and the DC input side switch,5minutes later, close the AC output side switch and the DC input side switch. If the fault persists, please contact the distributor or after-sales service center.
F94	FlyCap Precharge Failure	FlyCap Precharge Failure, possible causes: 1. PVenergy insufficient; 2. Inverter FlyCap voltage sampling abnormal;	Disconnect the AC output side switch and the DC input side switch,5minutes later, close the AC output side switch and the DC input side switch. If the fault persists, please contact the distributor or after-sales service center.
F95	FlyCap Precharge Abnormal	1. Control loop parameters are unreasonable 2. Hardware damage	Disconnect the AC output side switch and the DC input side switch,5minutes later, close the AC output side switch and the DC input side switch. If the fault persists, please contact the distributor or after-sales service center.

Fault Code	Fault Name	Fault Cause	Recommended Troubleshooting
F96, F97	String overcurrent（String1-n) n: Determine according to the actual Number of Strings of the inverter	Possible causes: 1. String overcurrent; 2. String current sensor abnormal	Disconnect the AC output side switch and the DC input side switch,5minutes later, close the AC output side switch and the DC input side switch. If the fault persists, please contact the distributor or after-sales service center.
F99, F100	String missing（String1-n) n: Determine according to the actual Number of Strings of the inverter	String fuse open (if present)	Check whether the fuse is open.
F101	Battery1Precharge Failure	Battery1precharge circuit failure (precharge resistor burned out, etc.)	Check whether the precharge circuit is in good condition; after the battery is powered on, check whether the Battery Voltage and bus voltage are consistent. If they are not consistent, please contact your dealer or after-sales service center.
F102	Battery1Relay Failure	Battery1relay fails to operate normally	After the battery is powered on, check whether the battery relay operates and whether a closing sound is heard. If it does not operate, contact the dealer or after-sales service center.

Fault Code	Fault Name	Fault Cause	Recommended Troubleshooting
F103	Battery1Overvoltage	Battery1input voltage exceeds the machine's rated range	Confirm whether the Battery Voltage is within the machine's rated range.
F104	Battery2Precharge Failure	Battery2precharge circuit failure (precharge resistor burned out, etc.)	Check whether the precharge circuit is in good condition; after the battery is powered on, check whether the Battery Voltage and bus voltage are consistent. If they are not consistent, please contact your dealer or after-sales service center.
F105	Battery2Relay Failure	Battery2relay fails to operate normally	After the battery is powered on, check whether the battery relay operates and whether a closing sound is heard. If it does not operate, contact the dealer or after-sales service center.
F106	Battery2Overvoltage	Battery2input voltage exceeds the machine's rated range	Confirm whether the Battery Voltage is within the machine's rated range.
F107	On-grid PWM Sync Failure	Abnormality during carrier synchronization and grid connection	1. Check whether the synchronization cable is connected properly. 2. Check whether the master-slave setting is normal; 3. Disconnect the AC output side switch and the DC input side switch,5 minutes, then close the AC output-side switch and DC input-side switch. If the fault persists, contact the dealer or after-sales service center.

Fault Code	Fault Name	Fault Cause	Recommended Troubleshooting
F108	DSPCommunication Failure	-	-
F109	ExternalSTSFault	The cable connection between the inverter andSTSis abnormal.	Check whether the harness connection sequence between the inverter andSTScorresponds one-to-one in order.
F110	Export Limit Protection	1. Inverter alarms and disconnects from the grid. 2. metercommunication is unstable. 3. Reverse power flow condition occurs.	1. Check whether the inverter has other alarm messages. If yes, take targeted measures; 2. Check whethermeterconnection is reliable; 3. If this alarm occurs frequently and affects the normal power generation of the plant, contact your distributor or after-sales service center.
F111	BypassOverload	-	-
F112	Black Start Failure	-	-
F113	Offgrid AC Ins Volt High	-	-
F114	Relay Failure2	Relay abnormality, cause: 1. Relay abnormality (relay short circuit) 2. Relay sampling circuit abnormality. 3. AC-side wiring abnormality (possible loose connection or short circuit)	Disconnect the AC output side switch and the DC input side switch,5 minutes later, close the AC output side switch and the DC input side switch. If the fault persists, please contact the distributor or after-sales service center.

Fault Code	Fault Name	Fault Cause	Recommended Troubleshooting
F115	SVGPrecharge Disabled	SVGprecharge hardware failure	Contact your dealer or after-sales service center.
F116	SVG ModeSVG PIDPrevention Failure	PIDPID hardware abnormality	
F117	DSPVersion Error	DSPsoftware version identification error	Disconnect the AC output side switch and the DC input side switch,5 minutes later, close the AC output side switch and the DC input side switch. If the fault persists, please contact the distributor or after-sales service center.
F118	MOSContinuous Overvoltage	1. Software issue causes the inverter drive to be turned off earlier than the flyback drive: 2. Inverter drive circuit abnormality prevents turn-on: 3. PVvoltage too high; 4. Mosvoltage sampling abnormality;	Disconnect the AC output side switch and the DC input side switch,5 minutes later, close the AC output side switch and the DC input side switch. If the fault persists, please contact the distributor or after-sales service center.
F119	Bus short-circuit fault	Hardware damage	If aBUSshort-circuit fault occurs and the inverter remains disconnected from the grid, please contact your dealer or after-sales service center.

Fault Code	Fault Name	Fault Cause	Recommended Troubleshooting
F120	Bus sampling abnormality	1. BUSvoltage sampling hardware fault	Disconnect the AC output side switch and the DC input side switch,5 minutes later, close the AC output side switch and the DC input side switch. If the fault persists, please contact the distributor or after-sales service center.
F121	DCSample Abnormal	1. BUSvoltage sampling hardware fault 2. Battery Voltage sampling hardware fault 3. DcrlyRelay Failure	Disconnect the AC output side switch and the DC input side switch,5 minutes later, close the AC output side switch and the DC input side switch. If the fault persists, please contact the distributor or after-sales service center.

8.5.2.2.4 Fault Handling (Fault Codes F122-F171)

Fault Code	Fault Name	Fault Cause	Recommended Troubleshooting
F122	PVInput Mode Error	PVAccess Mode has three modes in total; taking four-channelMPPTas an example: 1. Parallel mode: i.e.,AAAAmode（same-source mode），PV1-PV4share the same source, and4stringsofPVare connected to the same PV module 2. Partial parallel mode: i.e.AACCmode,PV1andPV2are connected to the same source,PV3andPV4are connected to the same source 3. Independent mode: i.e.ABCDmode（Non-common-source），PV1、PV2、PV3、PV4independently connected,4stringsofPVeach connected to one PV panel	Check whetherPVAccess Mode is set correctly (ABCD、AACC、AAAA), and set thePVAccess Mode 1. Confirm whether each actually connectedPVis connected correctly; 2. IfPVis correctly connected, use theAPPor screen to check whether the currently set "PVAccess Mode" matches the actual Access Mode; 3. If the currently set "PVAccess Mode" does not match the actual Access Mode, use theAPPor screen to set "PVAccess Mode" to the mode consistent with the actual situation; after setting, disconnect thePVandACpower supply and restart; 4. After setting is complete, if the current "PVAccess Mode" matches the actual Access Mode but this fault is still reported, contact your dealer or after-sales service center.

Fault Code	Fault Name	Fault Cause	Recommended Troubleshooting
		If thePVAccess Mode does not match the device-configuredPVAccess Mode, this fault will be reported	
F123	Multi-channelPVphase error	PVinput mode setting error	Check whetherPVAccess Mode is set correctly (ABCD、AACC、AAAA), and set thePVAccess Mode 1. Confirm whether each actually connectedPVis connected correctly; 2. IfPVis correctly connected, use theAPPor screen to check whether the currently set "PVAccess Mode" matches the actual Access Mode; 3. If the currently set "PVAccess Mode" does not match the actual Access Mode, use theAPPor screen to set "PVAccess Mode" to the mode consistent with the actual situation; after setting, disconnect thePVandACpower supply and restart; 4. After setting is complete, if the current "PVAccess Mode" matches the actual Access Mode but this fault is still reported, contact your dealer or after-sales service center.
F124	Battery1Reversed	Battery1positive and negative terminals reversed	Check whether the positive and negative terminals of the battery and the machine are consistent.

Fault Code	Fault Name	Fault Cause	Recommended Troubleshooting
F125	Battery2Reversed	Battery2positive and negative terminals reversed	Check whether the positive and negative terminals of the battery and the machine are consistent.
F126	Abnormal battery connection	Abnormal battery connection	Check whether the battery is working normally.
F127	BAT Overtemperature	Battery temperature too high. Possible causes: 1. The inverter installation location is not ventilated. 2. Ambient Overtemperature. 3. The internal fan is operating abnormally.	Disconnect the AC output side switch and the DC input side switch,5 minutes later, close the AC output side switch and the DC input side switch. If the fault persists, please contact the distributor or after-sales service center.
F128	Ref Voltage Abnormal	Reference circuit fault	Disconnect the AC output side switch and the DC input side switch,5 minutes later, close the AC output side switch and the DC input side switch. If the fault persists, please contact the distributor or after-sales service center.
F129	Cabinet Under Temperature	Cabinet Under Temperature. Possible cause: ambient temperature is too low.	Disconnect the AC output side switch and the DC input side switch,5 minutes later, close the AC output side switch and the DC input side switch. If the fault persists, please contact the distributor or after-sales service center.
F130	ACsideSPDFault	AC-side surge protection device failed	Replace theAC-side surge protection device.

Fault Code	Fault Name	Fault Cause	Recommended Troubleshooting
F131	DCsideSPDFault	DC-side surge protection device failed	Replace theDC-side surge protection device.
F132	Internal Fan Abnormal	Internal Fan Abnormal. Possible causes: 1. Fan power supply abnormal; 2. Mechanical fault（locked rotor）; 3. Fan aging and damage.	Disconnect the AC output side switch and the DC input side switch,5 minutes later, close the AC output side switch and the DC input side switch. If the fault persists, please contact the distributor or after-sales service center.
F133	External Fan Abnormal	External Fan Abnormal, possible causes: 1. Fan power supply abnormal; 2. Mechanical fault（locked rotor）; 3. Fan aging and damage.	
F134	PIDAbnormal	PIDhardware fault orPVovervoltage;PID suspended	PVovervoltage-inducedPIDsuspension warning requires no action;PIDhardware faults can be cleared by turning off thePIDswitch and then turning it on to clear thePIDfault, or by replacing thePIDdevice.

Fault Code	Fault Name	Fault Cause	Recommended Troubleshooting
F135	Trip-Switch Trip Warning	Possible causes: Overcurrent orPVreverse polarity caused the trip switch to open;	Contact your dealer or after-sales service center; the trip cause is the occurrence ofPVshort circuit or reverse polarity; it is necessary to check whether there are historicalPVshort-circuit warnings or historicalPVreverse-polarity warnings. If present, maintenance personnel need to check the correspondingPVconditions. After inspection confirms no fault, the trip switch can be manually closed, and through theAPPinterface's Clear Historical Fault operation, clear this warning.
F136	HistoricalPV IGBT short-circuit warning	Possible causes: Overcurrent caused the trip switch to open;	Contact your dealer or after-sales service center; maintenance personnel need to follow the historicalPVshort-circuit warning sub-code to check whether a fault exists in theBoosthardware where the short circuit occurred and in the external string; after inspection confirms no fault, the warning can be cleared through theAPPinterface's Clear Historical Fault operation, clear this warning.

Fault Code	Fault Name	Fault Cause	Recommended Troubleshooting
F137, F138	HistoricalPVreverse-polarity warning（String1-n)（n: determined by the actual Number of Strings of the inverter)	Possible causes: Occurrence ofPVreverse polarity caused the trip switch to open;	Contact your dealer or after-sales service center; maintenance personnel need to follow the historicalPVreverse-polarity warning sub-code to check whether the corresponding string has reverse polarity and check whether there is a voltage difference in thePVpanel configuration; after inspection confirms no fault, the warning can be cleared through theAPPinterface's Clear Historical Fault operation, clear this warning.
F139	FlashR/W Error	Possible causes: 1. Flashcontent has changed; 2. Flashlife has been exhausted;	1. Upgrade to the latest firmware; 2. Contact your dealer or after-sales service center.
F140	Meter Comm Loss	This warning may be reported only after the Power Limit function is enabled; possible causes: 1. Meter not connected; 2. Incorrect wiring of the communication cable between the meter and the inverter.	Check the meter wiring and connect the meter correctly. If the fault persists after checking, contact your dealer or after-sales service center.

Fault Code	Fault Name	Fault Cause	Recommended Troubleshooting
F141	PVType Identification Failure	PVPanel Identification Hardware Abnormality	Contact your dealer or after-sales service center.
F142	PV String Mismatch	PVString Mismatch; the two strings under the sameMPPThave different open-circuit voltage configurations	Check the open-circuit voltage of the two string groups, and configure strings with the same open-circuit voltage to the sameMPPT; long-term PV String Mismatch poses a safety hazard.
F143	CTnot connected	CTnot connected	Check whetherCTwiring.
F144	CTReversed	CTReversed	Check whetherCTwiring.
F145	PE Loss	PE not connected	Check the PE cable.
F146	PV String Terminal Overtemperature（String1~8)	37176registerPVterminal temperature alarm subcode1is set	-
F147	PV String Terminal Overtemperature（String9~16)	37177registerPVterminal temperature alarm subcode2is set	-
F148	PV String Terminal Overtemperature（String17~20)	37178registerPVterminal temperature alarm subcode3is set	-

Fault Code	Fault Name	Fault Cause	Recommended Troubleshooting
F149	HistoricalPVreverse-polarity warning（String33~48)	Possible causes: Occurrence ofPVreverse polarity caused the trip switch to open;	Contact your dealer or after-sales service center; maintenance personnel need to follow the historicalPVreverse-polarity warning sub-code to check whether the corresponding string has reverse polarity and check whether there is a voltage difference in thePVpanel configuration; after inspection confirms no fault, the warning can be cleared through theAPPinterface's Clear Historical Fault operation, clear this warning.
F150	Battery1Voltage Low	Battery Voltage is lower than the set value.	-
F151	Battery2Voltage Low	Battery Voltage is lower than the set value.	-
F152	Low Voltage of Battery Power	Battery is not in charging mode; voltage is lower than the shutdown voltage.	-
F153	Battery1Voltage High	-	-
F154	Battery2Voltage High	-	-

Fault Code	Fault Name	Fault Cause	Recommended Troubleshooting
F155	Online Low Insulation Resistance	1. PV string is short-circuited to protective earth (Protection). 2. The environment where the PV strings are installed is humid for a long time, and the line-to-ground insulation is poor.	1. Check the impedance of the PV strings to the Protection ground (PE). If a short circuit occurs, rectify the short-circuit point. 2. Check whether the inverter's protective earth conductor (Protection) is correctly connected. 3. If it is confirmed that this impedance is indeed lower than the default value in rainy weather, reset the insulation resistance Protection threshold.
F156	Micro-grid Overload Warning	backupterminal input current is too high	If it occurs occasionally, no action is required; if this alarm occurs frequently, please contact your dealer or after-sales service center.
F157	Manual Reset	-	-
F158	Generator Phase Sequence Abnormal	-	-
F159	Multiplexed Port Configuration Abnormal	Reused（generator）port is configured as microgrid or large load, but a generator is actually connected	When usingAPP, change the reused（generator）port configuration.
F160	EMSForced Off-grid	EMSissues a forced off-grid command, but the off-grid function is not enabled	Enable the off-grid function.

Fault Code	Fault Name	Fault Cause	Recommended Troubleshooting
F161	Passive Anti-islanding Protection	-	-
F162	Grid Type Fault	Actual Type of Electrical Supply System（two-phase or split-phase）does not match the configured safety standard	Switch to the corresponding safety standard according to the actual Type of Electrical Supply System.
F163	Grid Phase Instability	Grid anomaly: the rate of change of grid voltage phase does not comply with the local grid standard.	1. If it occurs occasionally, it may be a short-term grid abnormality. The inverter will resume normal operation after detecting that the grid is normal, and no manual intervention is required. 2. If it occurs frequently, check whether the grid frequency is within the permitted range; if not, contact the local power utility.
F166	PV Terminal Overtemperature	PV Terminal Overtemperature, possible causes: 1. The inverter installation location is not ventilated. 2. Ambient Overtemperature. 3. The internal fan is operating abnormally.	

Fault Code	Fault Name	Fault Cause	Recommended Troubleshooting
F167	AC Terminal Overtemperature Warning	AC Terminal Overtemperature, possible causes: 1. The inverter installation location is not ventilated. 2. Ambient Overtemperature. 3. The internal fan is operating abnormally.	1. Check whether the ventilation at the inverter installation location is good and whether the ambient temperature exceeds the maximum allowable ambient temperature range. 2. If the location is not ventilated or Ambient Overtemperature occurs, improve its ventilation and heat dissipation. 3. If ventilation and ambient temperature are both normal, contact your dealer or after-sales service center.
F168	Bat Terminal Overtemperature	Bat Terminal Overtemperature, possible causes: 1. The inverter installation location is not ventilated. 2. Ambient Overtemperature.	
F169	Bat Terminal Overtemperature Warning	Bat Terminal Overtemperature, possible causes: 1. The inverter installation location is not ventilated. 2. Ambient Overtemperature.	

Fault Code	Fault Name	Fault Cause	Recommended Troubleshooting
F170	STS Overtemperature	STS Overtemperature, possible causes: 1. The STS installation location is not ventilated. 2. Ambient Overtemperature.	
F171	Abnormal wiring between the inverter and battery	Abnormal power line connection between the battery and inverter	Check whether the power line connection between the battery and inverter is normal.

8.5.2.2.5 Fault Symptom Troubleshooting

Fault Name	Fault Cause	Recommended Troubleshooting
Generator Failure	1. This fault is continuously displayed when the generator is Not Connected 2. When the generator is running, failure to meet the generator safety standard will trigger this fault	1. If the generator is not connected, ignore this fault; 2. It is normal for this fault to occur when the generator is faulty; after the generator recovers, wait for a period of time and the fault will be automatically cleared; 3. This fault does not affect the normal operation of off-grid mode 4. When the generator and grid are connected simultaneously and meet the safety standard requirements, the grid is prioritized for grid connection, and the system will operate in grid-connected mode.

Fault Name	Fault Cause	Recommended Troubleshooting
BMS Status Bit Error	BMS Module Fault	Disconnect the AC output side switch and the DC input side switch. After 5 minutes, close the AC output side switch and the DC input side switch. If the fault persists, contact your dealer or after-sales service center.
Ambient Overtemperature	1. Poor ventilation of the equipment 2. Hot air recirculates to the ambient temperature sampling point	Disconnect the AC output side switch and the DC input side switch. After 5 minutes, close the AC output side switch and the DC input side switch. If the fault persists, contact your dealer or after-sales service center.
PV Terminal Overtemperature	PV Terminal Overtemperature, possible causes: 1. The inverter installation location is not ventilated. 2. Ambient Overtemperature. 3. Abnormal operation of the internal fan.	1. Check whether the ventilation at the inverter installation location is adequate and whether the ambient temperature exceeds the maximum allowable ambient temperature range. 2. If there is no ventilation or Ambient Overtemperature occurs, improve the ventilation and heat dissipation conditions. 3. If ventilation and ambient temperature are normal, contact your dealer or after-sales service center.
Bat Terminal Overtemperature	Bat Terminal Overtemperature, possible causes: 1. The inverter installation location is not ventilated. 2. Ambient Overtemperature.	1. Check whether the ventilation at the inverter installation location is adequate and whether the ambient temperature exceeds the maximum allowable ambient temperature range. 2. If there is no ventilation or Ambient Overtemperature occurs, improve the ventilation and heat dissipation conditions. 3. If ventilation and ambient temperature are normal, contact your dealer or after-sales service center.

Fault Name	Fault Cause	Recommended Troubleshooting
AC Terminal Overtemperature Warning	AC Terminal Overtemperature, possible causes: 1. The inverter installation location is not ventilated. 2. Ambient Overtemperature. 3. Abnormal operation of the internal fan.	
Bat Terminal Overtemperature Warning	Bat Terminal Overtemperature, possible causes: 1. The inverter installation location is not ventilated. 2. Ambient Overtemperature.	1. Check whether the ventilation at the inverter installation location is adequate and whether the ambient temperature exceeds the maximum allowable ambient temperature range. 2. If there is no ventilation or Ambient Overtemperature occurs, improve the ventilation and heat dissipation conditions. 3. If ventilation and ambient temperature are normal, contact your dealer or after-sales service center.
Three-phase on-grid fault	Three-phase external wiring error	Rewire.
External STS Failure	Abnormal cable between the inverter and STS	Check whether the harness connection sequence between the inverter and STS corresponds one-to-one in order.

Fault Name	Fault Cause	Recommended Troubleshooting
Parallel Comm Timeout Shutdown	In parallel operation, if the slave unit exceeds400seconds without communicating with the master unit	Check whether the parallel communication harness is reliably connected and whether slave addresses are duplicated.
Three-phase off-grid phase loss fault	Three-phase system phase loss	1. Check whether all inverters are powered on; 2. Check whether each phase of the three-phase group is connected to an inverter;
EPO	External triggering of the hardware EPO button or remote triggering of the EPO command	1. If Remote Shutdown is actively triggered, it can be ignored; 2. If there is no active trigger,please contact your dealer or after-sales service center.

Fault Name	Fault Cause	Recommended Troubleshooting
High combustible gas concentration	The combustible gas detection device automatically triggers when it detects a concentration of 20% LEL or above	1. After the fault occurs, the equipment automatically opens the air damper to exhaust gas and reduce the concentration. When the concentration drops below 5% LEL and remains so for 15 minutes, the fault is automatically cleared. 2. After the fault occurs, if a cluster-level Fire Fighting Failure is triggered, the air damper will automatically close, and the damper status will be confirmed within 30 s to ensure that cluster-level fire fighting Protection is performed in an enclosed space. 3. Please contact your dealer or after-sales service center.
The open air damper and feedback signal of the combustible gas device are inconsistent.	The control signal for opening the air damper is inconsistent with the feedback signal.	1. Check that the harness signal connections are correct. 2. Please contact your dealer or after-sales service center.
One-key shutdown stop	Check via the App whether the one-key shutdown function is enabled.	Disable one-key shutdown.
Offline shutdown	-	-
Remote shutdown	-	-

Fault Name	Fault Cause	Recommended Troubleshooting
On-Grid SPD Fault	-	1. Try restarting the machine and observe whether the fault is cleared; 2. If the fault cannot be cleared after restarting, please contact your dealer or after-sales service center.
Off-Grid SPD Fault	-	1. Try restarting the machine and observe whether the fault is cleared; 2. If the fault cannot be cleared after restarting, please contact your dealer or after-sales service center.
Child Node Communication Failure	Internal Comm Abnormal	1. Try restarting the machine and observe whether the fault is cleared; 2. If the fault cannot be cleared after restarting, please contact your dealer or after-sales service center.
Dehumidifier communication failure	The communication link between the dehumidifier and the LC control box is abnormal.	1. Check the communication harness of the link and observe whether the fault is cleared; 2. Try restarting the machine and observe whether the fault is cleared; 3. If the fault cannot be cleared after restarting, please contact your dealer or after-sales service center.

Fault Name	Fault Cause	Recommended Troubleshooting
Combustible gas detection device communication failure	1. The combustible gas device was not properly configured with RS-485 address 2 at the factory. 2. The communication link between the combustible gas device and the LC control box is abnormal.	1. Check the communication harness of the link and observe whether the fault is cleared; 2. Try restarting the machine and observe whether the fault is cleared; 3. Use the method provided by the combustible gas device manufacturer to check whether the device address is 2; if not, modify it; 4. If the fault cannot be cleared after restarting, please contact your dealer or after-sales service center.
DG Communication Failure	The communication link between the control board and DG is abnormal.	1. Check the communication harness of the link and observe whether the fault is cleared; 2. Try restarting the machine and observe whether the fault is cleared; 3. If the fault cannot be cleared after restarting, please contact your dealer or after-sales service center.
Battery Over Voltage	1. Individual cell voltage too high 2. Voltage sampling harness abnormal	Record the fault phenomenon, restart the battery, wait a few minutes, and confirm whether the fault disappears. If the problem persists after restart, contact the after-sales service center.
	1. Total battery voltage too high 2. Voltage sampling harness abnormal	
Battery Undervoltage	1. Single cell voltage too low 2. Voltage sampling harness abnormal	

Fault Name	Fault Cause	Recommended Troubleshooting
	1. Total battery voltage too low 2. Voltage sampling harness abnormal	
Battery Overcurrent	1. Charging Current too high, battery current limiting abnormal: sudden changes in temperature and voltage values 2. Inverter response abnormal	
	Battery discharge current excessive	
Battery Overtemperature	1. Ambient Overtemperature 2. Temperature sensor abnormal	
Battery Undertemperature	1. Ambient temperature too low 2. Temperature sensor abnormal	
Battery Terminal Overtemperature	Terminal temperature too high	

Fault Name	Fault Cause	Recommended Troubleshooting
Battery Imbalance	1. If the temperature difference is too large, the battery will limit battery power at different stages, that is, limit the charge and discharge current. Therefore, this problem is generally unlikely to occur. 2. Cell capacity degradation leads to excessive internal resistance, resulting in a large temperature rise under Overcurrent and thus a large temperature difference. 3. Poor welding of cell tabs causes the cell temperature to rise too quickly under Overcurrent. 4. Temperature sampling issue; 5. Loose power line connection	

Fault Name	Fault Cause	Recommended Troubleshooting
	1. Inconsistent degree of cell aging 2. Problems with the slave board chip can also cause excessive cell voltage difference; 3. Slave board balancing issues can also cause excessive cell voltage difference 4. Caused by wiring harness issues	
Insulation Resistance	Insulation resistance damaged	Check whether the ground wire is properly connected, restart the battery, and if the problem persists after restart, contact the after-sales service center.
Pre-charging Failure	Pre-charging Failure	Indicates that during pre-charging, the voltage across the pre-charge MOS always exceeds the specified threshold. After powering off and restarting, observe whether the fault persists, and check whether the wiring is correct and whether the pre-charge MOS is damaged.
Sampling line fault	Poor contact or disconnection of battery sampling line	Check the wiring, restart the battery, and if the problem persists after restart, contact the after-sales service center.
	Poor contact or disconnection of cell voltage sampling line	Check the wiring, restart the battery, and if the problem persists after restart, contact the after-sales service center.

Fault Name	Fault Cause	Recommended Troubleshooting
	Poor contact or disconnection of cell temperature sampling line	
	Excessive comparison error between dual-channel currents, or abnormal current sampling line circuit	
	Excessive comparison error between dual-channel voltages or excessive voltage comparison error between MCU and AFE, or abnormal voltage sampling line circuit	
	Temperature acquisition line circuit abnormal, poor contact, or open circuit	
	Level 5 overvoltage or Level 5 overtemperature, three-terminal fuse blown	Three-terminal fuse blown; contact the after-sales service center to replace the main control board.

Fault Name	Fault Cause	Recommended Troubleshooting
Relay or MOS overtemperature	Relay or MOS overtemperature	This fault indicates that the MOS temperature exceeds the specified threshold. Shut down and leave it standing for 2 h until the temperature recovers.
Shunt overtemperature	Shunt overtemperature	This fault indicates that the shunt temperature exceeds the specified threshold. Shut down and leave it standing for 2 h until the temperature recovers.
BMS1 Other Fault 1 (residential ESS type)	Relay or MOS open circuit	1. Upgrade the software, shut down and leave it standing for 5 minutes, and check whether the fault persists after restart; 2. If it persists, replace the battery pack
	Relay or MOS short circuit	1. Upgrade the software, shut down and leave it standing for 5 minutes, and check whether the fault persists after restart; 2. If it persists, replace the battery pack
	Abnormal communication between the master cluster and slave cluster, or cell inconsistency between clusters	1. Check the battery information and software version of the slave unit, as well as whether the communication cable connection to the master unit is normal 2. Upgrade the software
	The battery system return harness is abnormal, resulting in the interlock signal not forming a loop	Check whether the termination resistor is installed correctly

Fault Name	Fault Cause	Recommended Troubleshooting
	Abnormal communication between BMS and PCS	1. Confirm whether the interface definition of the communication cable between the inverter and battery is correct; 2. Contact the after-sales service center to check the backend data and observe whether the inverter and battery software match correctly.
	Abnormal communication harness between the BMS master control and slave control	1. Check the wiring and restart the battery; 2. Upgrade the battery. If the problem still exists after restart, contact the after-sales service center.
	Communication between main negative chips lost	
	Air circuit breaker or shunt release abnormal	1. Shut down and leave it standing for 5 minutes; check whether the fault persists after restart; 2. Check whether the communication pins of the blind-mate connectors at the bottom of the PACK and PCU are loose or skewed;
	MCU self-test failed	Upgrade the software and restart the battery. If the problem still exists after restart, contact the after-sales service center.

Fault Name	Fault Cause	Recommended Troubleshooting
	1. The software version is too low or the BMS board is damaged 2. The number of inverters connected in parallel is large, and the battery experiences excessive surge during precharging	1. Upgrade the software and observe whether the fault persists. 2. If operating in parallel, black-start the battery first, then start the inverter.
	MCU internal fault	Upgrade the software and restart the battery. This generally indicates MCU or external component damage. If the problem persists after restart, contact the after-sales service center.
	Total control current exceeds the specified threshold	1. Shut down and leave standing for 5 minutes; after restart, check whether the fault persists; 2. Check whether the inverter power setting is too high, resulting in exceeding the bus load;
	Cell inconsistency in parallel battery clusters	Check whether the cells in the parallel battery clusters are consistent
	Reverse connection of positive and negative poles in parallel battery clusters	Check whether the positive and negative poles of the parallel battery clusters are reversely connected

Fault Name	Fault Cause	Recommended Troubleshooting
	Severe over-temperature, over-voltage, or other conditions have triggered the fire protection system	Contact the after-sales service center.
Air Conditioner Failure	Abnormal air conditioner failure	Try restarting the system. If the fault is not cleared, contact the after-sales service center.
	Cabinet door not closed	Check whether the cabinet door is properly closed
	Supply voltage too high	Verify whether the supply voltage meets the air conditioner input voltage requirements; power on again only after confirming compliance.
	Insufficient supply voltage	
	No voltage input	
	Unstable supply voltage	
	Unstable compressor voltage	Try restarting the system. If the fault is not cleared, contact the after-sales service center.
	Poor sensor contact or sensor damage	
	Air conditioner fan fault	
BMS1 Other Fault 2 (Residential Energy Storage)	Abnormal voltage or current inside the DCDC	Refer to the specific DC Failure details.
	DCDC Overload or high heatsink temperature, etc.	

Fault Name	Fault Cause	Recommended Troubleshooting
	Abnormal cell data acquisition or inconsistent aging levels	Please contact the after-sales service center.
	Fan action was not executed normally	Please contact the after-sales service center.
	Output port screws are loose or have poor contact	1. Shut down the battery and check the wiring and the condition of the output port screws. 2. After confirmation, restart the battery and observe whether the fault persists. If it persists, please contact the after-sales service center.
	The battery has been in use for too long or the battery cells are severely damaged	Please contact the after-sales service center to replace the pack.
	1. The software version is too low or the BMS board is damaged 2. The number of inverters connected in parallel is large, and the battery experiences excessive surge during precharging	1. Upgrade the software and observe whether the fault persists. 2. If in parallel operation, black-start the battery first and then start the inverter.
	Heating film is damaged	Please contact the after-sales service center.

Fault Name	Fault Cause	Recommended Troubleshooting
	The three-terminal fuse of the heating film is open, so the heating function is unavailable.	Please contact the after-sales service center.
	Software model, cell type, and hardware model do not match	Check whether the software model, SN, cell type, and hardware model are consistent. If not, please contact the after-sales service center.
	Thermal management board communication is disconnected	1. Shut down and leave it standing for 5 minutes; check whether the fault persists after restart; 2. If the fault does not recover, contact after-sales to replace the pack.
	Pack fan fault signal triggered	
DCDC Failure	Output port voltage is too high	Check the output port voltage. If the output port voltage is normal and the fault still cannot clear automatically after restarting the battery, please contact the after-sales service center.
	The DCDC module detects that Battery Voltage exceeds the maximum charging voltage	Stop charging, discharge to below SOC 90%, or leave it idle for 2 h. If ineffective and the fault still exists after restart, please contact the after-sales service center.
	Heatsink temperature is too high	Leave the battery idle for 1 h until the heatsink temperature drops. If ineffective and the fault still exists after restart, please contact the after-sales service center.

Fault Name	Fault Cause	Recommended Troubleshooting
	Battery discharge current excessive	Check whether the load exceeds the battery's discharge capability. Turn off the load or stop the PCS for 60 s. If ineffective and the fault still exists after restart, please contact the after-sales service center.
	The positive and negative poles of the output port power harness are connected in reverse to the parallel battery cluster or PCS	Turn off the battery manual switch, check whether the output port wiring is correct, and restart the battery.
	Output power relay cannot close	Check whether the output port wiring is correct and whether there is a short circuit. If ineffective and the fault still exists after restart, please contact the after-sales service center.
	Power device temperature is too high	Leave the battery idle for 1 h until the temperature of the internal power devices drops. If ineffective and the fault still exists after restart, please contact the after-sales service center.
	Relay stuck	If the fault persists after restart, please contact the after-sales service center.
Battery Rack Circulating Current Failure	1. Cell imbalance 2. Full-charge calibration not performed at first power-on	Record the fault phenomenon, restart the battery, wait a few minutes, and confirm whether the fault disappears. If the problem persists after restart, contact the after-sales service center.

Fault Name	Fault Cause	Recommended Troubleshooting
BMS1 Other Fault 3 (Large-Scale Energy Storage)	Communication error with Linux module	1. Check whether the communication cable connection is normal 2. Upgrade the software, restart the battery, and observe whether the fault persists. If it persists, please contact the after-sales service center.
	Excessive cell temperature rise	Abnormal cell. Contact after-sales to replace the pack.
	SOC below 10%	Charge the battery.
	SN writing does not comply with the rules	Check whether the SN digit count is correct. If abnormal, please contact the after-sales service center.
	1. Abnormal daisy-chain communication within the battery rack 2. Inconsistent cell aging among battery racks	1. Check the contact condition of the battery packs in a single rack 2. Confirm the usage of each battery rack, such as cumulative charge/discharge capacity and cycle count 3. Please contact the after-sales service center.
	Excessive humidity inside the pack	-
	Fuse blown	Contact after-sales to replace the pack.
	Low battery level	Charge the battery.
BMS1 Other Fault 4 (Large-Scale Energy Storage)	Air circuit breaker abnormality	Contact after-sales to replace the pack.
	External device fault	Contact after-sales to replace the pack.
Contactor Failure 1	-	-

Fault Name	Fault Cause	Recommended Troubleshooting
Contactor Failure 2	-	-
Overload Protection (Ksic)	Continuous overload (over 690 kVA) for 10 s	Please contact the after-sales service center.
Overload Protection (Smart Port)	Continuous overload (over 690 kVA) for 10 s	Please contact the after-sales service center.
Overcurrent Protection (Ksic)	-	-
Overcurrent Protection (Smart Port)	-	-
Master AC On Meter Comm Error	1. The meter may not be connected to the master unit 2. The meter communication cable may be loose	1. Check whether the meter is connected to the master unit 2. Check whether the meter communication cable is loose
Parallel Slave Meter Error	Meter connected to slave	The unit connected to the meter is set as the master
Slave AC On Timeout with Master	1. Slave address setting error 2. Slave communication cable loose	1. Check whether the slave address is duplicated 2. Check whether the parallel communication cable is loose

8.5.3 Lynx Home D Battery Fault

When a battery system fault occurs, it may cause the battery system to automatically shut down or some functions to be abnormal. Please troubleshoot according to the following methods. If the troubleshooting methods cannot help you, please contact

the after-sales service center. When contacting the after-sales service center, please collect the following information to facilitate quick resolution of the problem.

1. Battery information, such as serial number, software version, device installation time, fault occurrence time, fault occurrence frequency, etc.
2. Device installation environment, such as weather conditions, etc. For the installation environment, photos, videos, and other files are recommended to assist in analyzing the problem.
3. When an alarm or fault occurs, only the multi-function button indicator of the master battery blinks or stays on.
4. In a multi-battery system, the battery with the smaller SN value is regarded as the master battery by default. The battery installation order does not affect the master-slave relationship.

Multi-function Button Indications	**SOC indicator**	**Fault category**	**Solution**
 Steady on	○○○○●	Battery overvoltage	Shut down and let it stand for 2 h. If the problem still exists after restart, please contact the after-sales service center.
 Steady on	○○○●○	Battery undervoltage	Please contact the after-sales service center.
 Steady on	○○○●●	High cell temperature	Shut down and let it stand for 2 h. If the problem still exists after restart, please contact the after-sales service center.
 Steady on	○○●○○	Low-temperature charging	Shut down and wait for the temperature to recover. If the problem still exists after restart, please contact the after-sales service center.

Multi-function Button Indications	SOC indicator	Fault category	Solution
 Steady on	○○●○●	Low-temperature discharging	Shut down and wait for the temperature to recover. If the problem still exists after restart, please contact the after-sales service center.
 Steady on	○○●●○	Charging overcurrent	Restart the battery. If the problem still exists after restart, please contact the after-sales service center.
 Steady on	○○●●●	Discharging overcurrent	Restart the battery. If the problem still exists after restart, please contact the after-sales service center.
 Steady on	○●○○●	Excessive temperature difference	Shut down and let it stand for 2 h. If the problem still exists after restart, please contact the after-sales service center.
 Steady on	○●○●●	Excessive cell voltage difference	After restarting the battery, leave it idle for 12 h. If the problem persists, contact the after-sales service center.
 Steady on	○●●○●	Harness abnormality	Restart the battery. If the problem still exists after restart, please contact the after-sales service center.
 Steady on	○●●●○	MOS fails to close	Restart the battery. If the problem still exists after restart, please contact the after-sales service center.

Multi-function Button Indications	SOC indicator	Fault category	Solution
 Steady on	○●●●●	MOS stuck closed	Restart the battery. If the problem still exists after restart, please contact the after-sales service center.
 Steady on	●○○○○	Parallel cluster fault	Restart the battery. If the problem still exists after restart, please contact the after-sales service center.
 Steady on	●○○●○	BMU communicati on fault	Restart the battery. If the problem still exists after restart, please contact the after-sales service center.

9 Technical Specifications

9.1 Inverter Parameters

Technical Data	GW15K-ET	GW20K-ET	GW25K-ET	GW29.9K-ET	GW30K-ET
Battery Input Data					
Battery Type	Li-Ion	Li-Ion	Li-Ion	Li-Ion	Li-Ion
Nominal Battery Voltage (V)	500	500	500	500	500
Battery voltage range (V)	200~800	200~800	200~800	200~800	200~800
Start-up Voltage (V)	200	200	200	200	200
Number of Battery Input	1	1	2	2	2
Max. Continuous Charging Current (A)	50	50	50×2	50×2	50×2
Max. Continuous Discharging Current (A)	50	50	50×2	50×2	50×2
Max Charge Power (W)	15000	20000	25000	30000	30000
Max Discharge Power (W)	15000	20000	25000	30000	30000
PV String Input Data					
Max. Input Power (W)*1	22500	30000	37500	45000	45000
Max. Input Voltage (V)*2	1000	1000	1000	1000	1000
MPPT Operating Voltage Range (V)	200~850	200~850	200~850	200~850	200~850
MPPT Voltage Range at Nominal Power (V)	400~850	400~850	450~850	450~850	450~850
Start-up Voltage (V)	200	200	200	200	200

Technical Data	GW15K-ET	GW20K-ET	GW25K-ET	GW29.9K-ET	GW30K-ET
Nominal Input Voltage (V)	620	620	620	620	620
Max. Input Current per MPPT (A)	30	30	30	30	30
Max. Short Circuit Current per MPPT (A)	38	38	38	38	38
Max. Backfeed Current to The Array (A)	0	0	0	0	0
Number of MPPT	2	2	3	3	3
Number of Strings per MPPT	2/2	2/2	2/2/2	2/2/2	2/2/2
AC Output Data (On-grid)					
Nominal Output Power (W)	15000	20000	25000	29900	30000
Max. Output Power (W)	15000	20000	25000	29900	30000
Nominal Output Power at 40 ℃(W) *14	15000	20000	25000	29900	30000
Max. Output Power at 40 ℃ (W)*14	15000	20000	25000	29900	30000
Nominal Apparent Power Output to Utility Grid (VA)	15000	20000	25000	29900	30000
Max. Apparent Power Output to Utility Grid (VA)*3 *15	16500	22000	27500	29900	33000
Nominal Apparent Power from Utility Grid(VA)	15000	20000	25000	30000	30000
Max. Apparent Power from Utility Grid (VA) *12	15000	20000	25000	30000	30000

Technical Data	GW15K-ET	GW20K-ET	GW25K-ET	GW29.9K-ET	GW30K-ET
Nominal Output Voltage (V)	380/400, 3L/N/PE	380/400, 3L/N/PE	380/400, 3L/N/PE	380/400, 3L/N/PE	380/400, 3L/N/PE
Output Voltage Range (V)*4	0~300	0~300	0~300	0~300	0~300
Nominal AC Grid Frequency (Hz)	50/60	50/60	50/60	50/60	50/60
AC Grid Frequency Range (Hz)	45~65	45~65	45~65	45~65	45~65
Max. AC Current Output to Utility Grid (A) *11	23.9	31.9	39.9	43.3	47.8
Max. AC Current From Utility Grid (A) *13	22.7	30.3	37.9	45.3	45.5
Nominal AC Current From Utility Grid (A)	21.7 @230V 22.7 @220V	29.0 @230V 30.3 @220V	36.2 @230V 37.9 @220V	43.3 @230V 45.3 @220V	43.5 @230V 45.5 @220V
Max. Output Fault Current (Peak and Duration) (A)	241.5A@126ms	241.5A@126ms	241.5A@126ms	241.5A@126ms	241.5A@126ms
Inrush Current (Peak and Duration) (A)	264A@53us	264A@53us	264A@53us	264A@53us	264A@53us
Nominal Output Current (A)*5	21.7	29	36.2	43.3	43.5

Technical Data	GW15K-ET	GW20K-ET	GW25K-ET	GW29.9K-ET	GW30K-ET
Power Factor	~1 (Adjustable from0.8 leading~0.8 lagging)	~1 (Adjustable from0.8 leading~0.8 lagging)	~1 (Adjustable from0.8 leading~0.8 lagging)	~1 (Adjustable from0.8 leading~0.8 lagging)	~1 (Adjustable from0.8 leading~0.8 lagging)
Max. Total Harmonic Distortion	≤3.05%	≤3.05%	≤3.05%	≤3.05%	≤3.05%
Maximum Output Overcurrent Protection (A)	94	94	94	94	94
AC Output Data (Back-up)					
Back-up Nominal Apparent Power (VA)	15000	20000	25000	29900	30000
Max. Output Apparent Power without Grid(VA)*6	15,000(18,000@60s , 24,000@3s)	20,000(24,000@60s , 32,000@3s)	25,000(30,000@60s)	30,000(36,000@60s)	30,000(36,000@60s)
Max. Output Apparent Power with Grid (VA)	15000	20000	25000	29900	30000
Nominal Output Current (A)	22.7	30.3	37.9	45.5	45.5
Max. Output Current (A)	22.7(27.3@60s, 36.4@3s)	30.3(36.4@60s, 48.5@3s)	37.9(45.5@60s)	45.5(54.5@60s)	45.5(54.5@60s)
Max. Output Fault Current (Peak and Duration) (A)	94	94	94	94	94

Technical Data	GW15K-ET	GW20K-ET	GW25K-ET	GW29.9K-ET	GW30K-ET
Inrush Current (Peak and Duration) (A)	264@53 us	264@53 us	264@53 us	264@53 us	264@53 us
Maximum Output Overcurrent Protection (A)	94	94	94	94	94
Nominal Output Voltage (V)	380/400	380/400	380/400	380/400	380/400
Nominal Output Frequency (Hz)	50/60	50/60	50/60	50/60	50/60
Output THDv (@Linear Load)	<3%	<3%	<3%	<3%	<3%
Efficiency					
Max. Efficiency	98.0%	98.0%	98.0%	98.0%	98.0%
European Efficiency	97.5%	97.5%	97.5%	97.5%	97.5%
Max. Battery to AC Efficiency	97.5%	97.5%	97.5%	97.5%	97.5%
MPPT Efficiency	99.9%	99.9%	99.9%	99.9%	99.9%
Protection					
PV String Current Monitoring	Integrated	Integrated	Integrated	Integrated	Integrated
PV Insulation Resistance Detection	Integrated	Integrated	Integrated	Integrated	Integrated
Residual Current Monitoring	Integrated	Integrated	Integrated	Integrated	Integrated
PV Reverse Polarity Protection	Integrated	Integrated	Integrated	Integrated	Integrated
Battery Reverse Polarity Protection	Integrated	Integrated	Integrated	Integrated	Integrated

Technical Data	GW15K-ET	GW20K-ET	GW25K-ET	GW29.9K-ET	GW30K-ET
Anti-islanding Protection	Integrated	Integrated	Integrated	Integrated	Integrated
AC Overcurrent Protection	Integrated	Integrated	Integrated	Integrated	Integrated
AC Short Circuit Protection	Integrated	Integrated	Integrated	Integrated	Integrated
AC Overvoltage Protection	Integrated	Integrated	Integrated	Integrated	Integrated
DC Switch*7	Integrated	Integrated	Integrated	Integrated	Integrated
DC Surge Protection	Type II	Type II	Type II	Type II	Type II
AC Surge Protection	Type III	Type III	Type III	Type III	Type III
AFCI*16	Optional	Optional	Optional	Optional	Optional
Rapid Shutdown	Optional	Optional	Optional	Optional	Optional
Remote Shutdown	Integrated	Integrated	Integrated	Integrated	Integrated
General Data					
Operating Temperature Range (℃)	-35~+60	-35~+60	-35~+60	-35~+60	-35~+60
Operating Environment	Outdoor	Outdoor	Outdoor	Outdoor	Outdoor
Relative Humidity	0 ~ 95%	0 ~ 95%	0 ~ 95%	0 ~ 95%	0 ~ 95%
Max. Operating Altitude (m)	4000	4000	4000	4000	4000
Cooling Method	Smart Fan Cooling	Smart Fan Cooling	Smart Fan Cooling	Smart Fan Cooling	Smart Fan Cooling

Technical Data	GW15K-ET	GW20K-ET	GW25K-ET	GW29.9K-ET	GW30K-ET
Display	LED, WLAN+APP	LED, WLAN+APP	LED, WLAN+APP	LED, WLAN+APP	LED, WLAN+APP
Communication with BMS	RS485 / CAN	RS485 / CAN	RS485 / CAN	RS485 / CAN	RS485 / CAN
Communication with Meter	RS485	RS485	RS485	RS485	RS485
Communication with Portal	WiFi+LAN+Bluetooth	WiFi+LAN+Bluetooth	WiFi+LAN+Bluetooth	WiFi+LAN+Bluetooth	WiFi+LAN+Bluetooth
Weight (kg)	48	48	54	54	54
Dimension W×H×D (mm)	520×660×220	520×660×220	520×660×220	520×660×220	520×660×220
Noise Emission (dB)	<45	<45	<45	<60	<60
Topology	Non-isolated	Non-isolated	Non-isolated	Non-isolated	Non-isolated
Self-consumption at Night (W) *8	<15	<15	<15	<15	<15
Ingress Protection Rating	IP66	IP66	IP66	IP66	IP66
DC Connector	Stäubli Electrical Connectors AG	Stäubli Electrical Connectors AG	Stäubli Electrical Connectors AG	Stäubli Electrical Connectors AG	Stäubli Electrical Connectors AG
AC Connector	OT	OT	OT	OT	OT
Environmental Category	4K4H	4K4H	4K4H	4K4H	4K4H
Pollution Degree	III	III	III	III	III
Overvoltage Category	DC II / AC III	DC II / AC III	DC II / AC III	DC II / AC III	DC II / AC III

Technical Data	GW15K-ET	GW20K-ET	GW25K-ET	GW29.9K-ET	GW30K-ET
Protective Class	I	I	I	I	I
Storage Temperature (℃)	-45~+85	-45~+85	-45~+85	-45~+85	-45~+85
The Decisive Voltage Class (DVC)	Battery：C PV：C AC：C Com：A	Battery：C PV：C AC：C Com：A	Battery：C PV：C AC：C Com：A	Battery：C PV：C AC：C Com：A	Battery：C PV：C AC：C Com：A
Mounting Method	Wall Mounted	Wall Mounted	Wall Mounted	Wall Mounted	Wall Mounted
Active Anti-islanding Method	AFDPF + AQDPF *9	AFDPF + AQDPF *9	AFDPF + AQDPF *9	AFDPF + AQDPF *9	AFDPF + AQDPF *9
Type of Electrical Supply System	Three phase Grid	Three phase Grid	Three phase Grid	Three phase Grid	Three phase Grid
Country of Manufacture	China	China	China	China	China

*1: In Australia, for most of the PV module, the max.Input power can achieve 2*Pn, Such as the max.input power of GW15K-ET can achieve 30000W. Besides, Max. Input Power, not continuous for 1.5*normal power.
*2: For 1000V system, Maximum operating voltage is 950V.
*3: According to the local grid regulation.
*4: Output Voltage Range: phase voltage.
*5: For 380V grid, the Nominal Output Current is 22.7A for GW15K-ET, 30.3A for GW20K-ET, 37.9A for GW25K-ET, 45.3A GW29.9K-ET, and 45.5A for GW30K-ET.
*6: Can be reached only if PV and battery power is enough.
*7: DC Switch: GHX6-55P (for Australia).
*8: No Back-up Output.
*9: AFDPF: Active Frequency Drift with Positive Feedback, AQDPF: Active Q Drift with Positive Feedback.
*10: Not all certifications & standards listed, check the official website for details.

*11: For 380V grid, the Max. AC Current Output to Utility Grid is 25A for GW15K-ET, 33.3A for GW20K-ET, 41.7A for GW25K-ET, 49.8A for GW29.9K-ET, 50A for GW30K-ET.
*12: When the load is connected to the inverter's backup port, the Max. Apparent Power from Utility Grid can reach to 22.5K for GW15K-ET, 30K for GW20k-ET, 33K for GW25K-ET, 33K for GW29.9K-ET,and 33K for GW30K-ET respectively.
*13: When the load is connected to the inverter's backup port, the Max. AC Current From Utility Grid can reach to 34A for GW15K-ET, 45A for GW20k-ET, 50A for GW25K-ET, 50A for GW29.9K-ET,and 50A for GW30K-ET respectively.
*14: Nominal Output Power at 40 ℃(W) and Max. Output Power at 40 ℃ (W) are only for Brazil.
*15: For Austria, Max. Output Power (W) is 15K for GW15K-ET, 20K for GW20K-ET, 25K for GW25K-ET, 29.9K GW29.9K-ET, and 30K for GW30K-ET.
*16: For Brazil, AFCI is integrated.

Technical Data	GW12KL-ET	GW18KL-ET	GW20K-ET	GW30K-ET
Battery Input Data				
Battery Type	Li-Ion	Li-Ion	Li-Ion	Li-Ion
Nominal Battery Voltage (V)	500	500	500	500
Battery Voltage Range (V)	112~650	112~650	200~800	200~800
Start-up Voltage (V)	112	112	180	180
Number of Battery Input	1	2	1	2
Max. Continuous Charging Current (A)	50	50*2	50	50*2
Max. Continuous Discharging Current (A)	50	50*2	50	50*2
Max Charge Power (kW)	12	18	20	30
Max Discharge Power (kW)	12	18	20	30
PV String Input Data				
Max. Input Power (kW)	24	36	30	45

Technical Data	GW12KL-ET	GW18KL-ET	GW20K-ET	GW30K-ET
Max. Input Voltage (V)*1	800	800	1000	1000
MPPT Operating Voltage Range (V)	200~650	200~650	200~850	200~850
MPPT Voltage Range at Nominal Power (V)	260~650	260~650	400~850	450~850
Start-up Voltage (V)	200	200	200	200
Nominal Input Voltage (V)	380	380	620	620
Max. Input Current per MPPT (A)	30	30	30	30
Max. Short Circuit Current per MPPT (A)	38	38	38	38
Max. Backfeed Current to The Array (A)	0	0	0	0
Number of MPPT Trackers	2	3	2	3
Number of Strings per MPPT	2/2	2/2/2	2/2	2/2/2
AC Output Data (On-grid)				
Nominal Output Power (kW)	12	18	20	30
Max. Output Power (kW)	12	18	20	30
Nominal Output Power at 40 ℃(kW) *8	12	18	20	30
Max. Output Power at 40 ℃ (kW)*8	12	18	20	30
Nominal Apparent Power Output to Utility Grid (kVA)	12	18	20	30

Technical Data	GW12KL-ET	GW18KL-ET	GW20K-ET	GW30K-ET
Max. Apparent Power Output to Utility Grid (kVA)	13.2	19.8	22	33
Nominal Apparent Power from Utility Grid(kVA)	12	18	20	30
Max. Apparent Power from Utility Grid (kVA) *6	12	18	20	30
Nominal Output Voltage (V)	220, 3L/N/PE	220, 3L/N/PE	380, 3L/N/PE	380, 3L/N/PE
Output Voltage Range (V)*2	0~165	0~165	0~300	0~300
Nominal AC Grid Frequency (Hz)	60	60	60	60
AC Grid Frequency Range (Hz)	55~65	55~65	45~65	45~65
Max. AC Current Output to Utility Grid (A)	34.6	52	33.3	50
Max. AC Current From Utility Grid (A) *7	31.5	47	30.3	45.5
Nominal AC Current From Utility Grid (A)	31.5	47	30.3	45.5
Max. Output Fault Current (Peak and Duration) (A)	241.5A@126 ms	241.5A@126 ms	241.5A@126 ms	241.5A@126 ms
Inrush Current (Peak and Duration) (A)	264A@53us	264A@53us	264A@53us	264A@53us
Nominal Output Current (A)	31.5	47	30.3	45.5

Technical Data	GW12KL-ET	GW18KL-ET	GW20K-ET	GW30K-ET
Power Factor	~1 (Adjustable from0.8 leading~0.8 lagging)	~1 (Adjustable from0.8 leading~0.8 lagging)	~1 (Adjustable from0.8 leading~0.8 lagging)	~1 (Adjustable from0.8 leading~0.8 lagging)
Max. Total Harmonic Distortion	<3%	<3%	<3%	<3%
Maximum Output Overcurrent Protection (A)	94	94	94	94
AC Output Data (Back-up)				
Back-up Nominal Apparent Power (kVA)	12	18	20	30
Max. Output Apparent Power without Grid(kVA)*3	12.0(14.4@60s , 19.2@3s)	18.0(21.6@60s)	20.0(24.0@60s , 32.0@3s)	30.0(36.0@60s)
Max. Output Apparent Power with Grid (kVA)	12	18	20	30
Nominal Output Current (A)	31.5	47	30.3	45.5
Max. Output Current (A)	31.5(37.8@60s, 50.4@3s)	47(56.4@60s)	30.3(36.4@60s, 48.5@3s)	45.5(54.5@60s)
Max. Output Fault Current (Peak and Duration) (A)	94	94	94	94
Inrush Current (Peak and Duration) (A)	264@53us	264@53us	264@53us	264@53us
Maximum Output Overcurrent Protection (A)	94	94	94	94

Technical Data	GW12KL-ET	GW18KL-ET	GW20K-ET	GW30K-ET
Nominal Output Voltage (V)	220, 3L/N/PE	220, 3L/N/PE	380, 3L/N/PE	380, 3L/N/PE
Nominal Output Frequency (Hz)	60	60	60	60
Output THDv (@Linear Load)	<3%	<3%	<3%	<3%
Switching from Grid Connected Mode to Standalone Mode	<10ms	<10ms	<10ms	<10ms
Switching from standalone mode to Grid connected mode	<10ms	<10ms	<10ms	<10ms
Efficiency				
Max. Efficiency	98.0%	98.0%	98.0%	98.0%
European Efficiency	97.5%	97.5%	97.5%	97.5%
Max. Battery to AC Efficiency	97.5%	97.5%	97.5%	97.5%
Protection				
PV String Current Monitoring	Integrated	Integrated	Integrated	Integrated
PV Insulation Resistance Detection	Integrated	Integrated	Integrated	Integrated
Residual Current Monitoring	Integrated	Integrated	Integrated	Integrated
PV Reverse Polarity Protection	Integrated	Integrated	Integrated	Integrated
Battery Reverse Polarity Protection	Integrated	Integrated	Integrated	Integrated

Technical Data	GW12KL-ET	GW18KL-ET	GW20K-ET	GW30K-ET
Anti-islanding Protection	Integrated	Integrated	Integrated	Integrated
AC Overcurrent Protection	Integrated	Integrated	Integrated	Integrated
AC Short Circuit Protection	Integrated	Integrated	Integrated	Integrated
AC Overvoltage Protection	Integrated	Integrated	Integrated	Integrated
DC Switch	Integrated	Integrated	Integrated	Integrated
DC Surge Protection	Type II	Type II	Type II	Type II
AC Surge Protection	Type III	Type III	Type III	Type III
AFCI	Integrated	Integrated	Integrated	Integrated
Rapid Shutdown	Optional	Optional	Optional	Optional
Remote Shutdown	Integrated	Integrated	Integrated	Integrated
General Data				
Operating Temperature Range (℃)	-35~+60	-35~+60	-35~+60	-35~+60
Storage Temperature (℃)	-45~+85	-45~+85	-45~+85	-45~+85
Relative Humidity	0 ~ 95%	0 ~ 95%	0 ~ 95%	0 ~ 95%
Max. Operating Altitude (m)	4000	4000	4000	4000
Cooling Method	Smart Fan Cooling	Smart Fan Cooling	Smart Fan Cooling	Smart Fan Cooling
User Interface	LED, WLAN+APP	LED, WLAN+APP	LED, WLAN+APP	LED, WLAN+APP
Communication with BMS	RS485 / CAN	RS485 / CAN	RS485 / CAN	RS485 / CAN

Technical Data	GW12KL-ET	GW18KL-ET	GW20K-ET	GW30K-ET
Communication	RS485, WiFi+LAN+Bluetooth, 4G+Bluetooth(Optional)	RS485, WiFi+LAN+Bluetooth, 4G+Bluetooth(Optional)	RS485, WiFi+LAN+Bluetooth, 4G+Bluetooth(Optional)	RS485, WiFi+LAN+Bluetooth, 4G+Bluetooth(Optional)
Communication Protocols	Modbus-RTU (SunSpec Compliant), Modbus-TCP	Modbus-RTU (SunSpec Compliant), Modbus-TCP	Modbus-RTU (SunSpec Compliant), Modbus-TCP	Modbus-RTU (SunSpec Compliant), Modbus-TCP
Weight (kg)	48	54	48	54
Dimension W×H×D (mm)	520×660×220	520×660×220	520×660×220	520×660×220
Noise Emission (dB)	<45	<60	<45	<60
Topology	Non-isolated	Non-isolated	Non-isolated	Non-isolated
Self-consumption at Night (W) *4	<15	<15	<15	<15
Ingress Protection Rating	IP66	IP66	IP66	IP66
Anti-corrosion Class	C4	C4	C4	C4
DC Connector	MC4	MC4	MC4	MC4
AC Connector	OT	OT	OT	OT
Environmental Category	4K4H	4K4H	4K4H	4K4H
Pollution Degree	III	III	III	III
Overvoltage Category	DC II / AC III	DC II / AC III	DC II / AC III	DC II / AC III
Protective Class	I	I	I	I

Technical Data	GW12KL-ET	GW18KL-ET	GW20K-ET	GW30K-ET
The Decisive Voltage Class (DVC)	Battery：C PV：C AC：C Com：A	Battery：C PV：C AC：C Com：A	Battery：C PV：C AC：C Com：A	Battery：C PV：C AC：C Com：A
Mounting Method	Wall Mounted	Wall Mounted	Wall Mounted	Wall Mounted
Active Anti-islanding Method	FDPF + AQDPF *5	FDPF + AQDPF *5	AFDPF + AQDPF *5	AFDPF + AQDPF *5
Type of Electrical Supply System	Three phase Grid	Three phase Grid	Three phase Grid	Three phase Grid
Country of Manufacture	China	China	China	China

*1: For 1000V system，Maximum operating voltage is 950V.
*2: Output Voltage Range: phase voltage.
*3: Can be reached only if PV and battery power is enough.
*4: No Back-up Output.
*5: AFDPF: Active Frequency Drift with Positive Feedback, AQDPF: Active Q Drift with Positive Feedback.
*6: When the load is connected to the inverter’s backup port, the Max. Apparent Power from Utility Grid can reach to 18kVA for GW12KL-ET, 19.8kVA for GW18KL-ET, 30kVA for GW20k-ET and 33kVA for GW30K-ET respectively.
*7: When the load is connected to the inverter’s backup port, the Max. AC Current From Utility Grid can reach 47.2 A for GW12KL-ET and 52A for GW18KL-ET; And can reach 45A for GW20k-ET and 50A for GW30K-ET respectively.
*8: Nominal Output Power at 40 ℃(W) and Max. Output Power at 40 ℃ (W) are only for Brazil.

9.2 Battery Parameters

9.2.1 Lynx home F

Technical parameters	LX F6.6-H	LX F9.8-H	LX F13.1-H	LX F16.4-H
Usable Energy(kWh)*1	6.55	9.83	13.1	16.38
Battery Module	LX F3.3-H: 38.4V 3.27kWh			
Number of Modules	2	3	4	5
Cell Type	LFP（$LiFePO_4$）			
Cell Configuration	64S1P	96S1P	128S1P	160S1P
Nominal Voltage (V)	204.8	307.2	409.6	512
Operating Voltage Range (V)	182.4~230.4	273.6~345.6	364.8~460.8	456~576
Nominal Dis-/Charge Current(A)*2	25			
Nominal Power (kW)*2	5.12	7.68	10.24	12.8
Operating Temperature (℃)	Charge: 0 ~ +50; Discharge: -20 ~ +50			
Relative Humidity	0~95%			
Max. Operating Altitude (m)	2000			
Communication	CAN			
Weight (kg)	115	158	201	244
Dimensions (W×H×D mm)	600*625*380	600*780*380	600*935*380	600*1090*380
Enclosure Type	IP55			
Installation Location	Grounded			

Technical parameters		LX F6.6-H	LX F9.8-H	LX F13.1-H	LX F16.4-H
Standard and Certification	Safety	IEC62619, IEC62040, CEC			
	EMC	CE，RCM			
	Transportation	UN38.3			
*1: Test conditions, 100% DOD, 0.2℃ charge & discharge at +25±2 °C for battery system at beginning life. System Usable Energy may vary with different Inverter. *2: Nominal Dis-/Charge Current and power derating will occur related to Temperature and SOC.					

9.2.2 Lynx home F Plus+

Technical parameters	LX F6.6-H	LX F9.8-H	LX F13.1-H	LX F16.4-H
Usable Energy(kWh)*1	6.55	9.83	13.10	16.38
Battery Module	LX F3.3-H: 38.4V 3.27kWh			
Number of Modules	2	3	4	5
Cell Type	LFP（$LiFePO_4$）			
Cell Configuration	64S1P	96S1P	128S1P	160S1P
Nominal Voltage (V)	204.8	307.2	409.6	512
Operating Voltage Range (V)	182.4~230.4	273.6~345.6	364.8~460.8	456~576
Nominal Dis-/Charge Current (A)*2	25			
Nominal Power (kW)*2	5.12	7.68	10.24	12.8

Technical parameters		LX F6.6-H	LX F9.8-H	LX F13.1-H	LX F16.4-H
Operating Temperature (℃)		Charge: 0 ~ +50; Discharge: -20 ~ +50			
Relative Humidity		0~95%			
Max. Operating Altitude (m)		2000			
Communication		CAN			
Weight (kg)		115	158	201	244
Dimensions (W×H×D mm)		600*610*380	600*765*380	600*920*380	600*1075*380
Enclosure Type		IP55			
Storage Temperature (°C)		-20 ~ +45 (≤ One Month); 0 ~ +35 (< One Year)			
Mounting Method		Grounded			
Round-trip Efficiency		96.4%			
Cycle Life		≥ 3500 @1C/1C			
Standard and Certification	Safety	IEC62619, IEC 62040, VDE2510-50, CEC			
	EMC	CE，RCM			
	Transportation	UN38.3			
*1 : Test conditions , 100% DOD, 0.2C charge & discharge at+25+2 °C for battery system at beginning life. System Usable Energy may vary with different Inverter. *2 : Nominal Dis-/Charge Current and power derating will occurrelated to Temperature and SOC. *3 : Based on 2.5~3.65V voltage rang @25+2°C of Cell under 11C/1C test condition and 80% EOL.					

9.2.3 Lynx home F G2

Technical Data	LX F6.4-H-20	LX F9.6-H-20	LX F12.8-H-20	LX F16.0-H-20	LX F19.2-H-20	LX F22.4-H-20	LX F25.6-H-20	LX F28.8-H-20
Usable Energy (kWh)*1	6.4	9.6	12.8	16.0	19.2*2	22.4*2	25.6	28.8
Battery Module	LX F3.2-20：64V 3.2kWh							
Number of Modules	2	3	4	5	6	7	8	9
Cell Type	LFP ($LiFePO_4$)							
Cell Configuration	(20S)2S1P	(20S)3S1P	(20S)4S1P	(20S)5S1P	(20S)6S1P	(20S)7S1P	(20S)8S1P	(20S)9S1P
Nominal Voltage (V)	128	192	256	320	384	448	512	576
Operating Voltage Range (V)	114.8~144.4	172.2~216.6	229.6~288.8	287~361	344.4~433.2	401.8~505.4	459.2~577.6	516.6~649.8
Nominal Dis-/Charge Current (A)*3	35							
Max. Continuous Dis-/Charge Current (A)	35							
Nominal Power (kW)*3	4.48	6.72	8.96	11.2	13.44	15.68	17.92	20.16
Operating Temperature Range (℃)*4	-20~+50							

Technical Data		LX F6.4-H-20	LX F9.6-H-20	LX F12.8-H-20	LX F16.0-H-20	LX F19.2-H-20	LX F22.4-H-20	LX F25.6-H-20	LX F28.8-H-20
Relative Humidity		0 ~ 95%							
Max. Operating Altitude (m)		3000							
Communication		CAN							
Weight (kg)		86	120	154	188	222	256	290	324
Dimensions (W×H×D mm)		600×559×380	600×715×380	600×871×380	600×1027×380	600×1183×380	600×1339×380	600×1495×380	600×1651×380
Ingress Protection Rating		IP55							
Storage Temperature (℃)		-20~+45(≤One Month) ; 0~+35(≤One Year)							
Mounting Method		Grounded							
Round-trip Efficiency		94%							
Cycle Life*5		> 4000							
Standard and Certification	Safety	IEC62619、IEC62040-1、IEC63056、VDE2510、 CE							
	EMC	CE, RCM							
	Transportation	UN38.3							

9.2.4 Lynx home D

Technical parameters		LX D5.0-10
Usable energy (kWh)*1		5
Cell Type		LFP (LiFePO4)
Cell Configuration		16S1P
Nominal Voltage (V)		Charge: 435V; Discharge: 380V
Operating Voltage Range (V)		320~480V
Nominal Charge/Discharge Power (kW)		3
Peak Power		5KW, 10s
Operating Temperature Range (℃)		Charge: 0~+53; Discharge: -20~+53
Relative Humidity		0~95%
Max. Operating Altitude (m)		4000
Communication		CAN
Weight (kg)		52
Dimension (W×H×D mm)		700×380×170
Ingress Protection Rating		IP66
Storage Temperature (℃)		-20~0 (≤ One Months), 0~+35 (≤ One Year)
Mounting Method		Floor stacked, Wall Mounted
Cycle Life *2		4500
Standard and Certification	Safety	IEC62619、IEC60730、VDE2510-50、 CE 、CEC
	EMC	CE, RCM
	Transportation	UN38.3
*1: Test conditions, 100% DOD, 0.2C charge & discharge at +25±3 °C for battery system at beginning life. Usable energy may vary with different inverter. *2: Based on 2.87~3.59V voltage rang @25+2 °C of Cell under 0.6C/0.6C test condition and 80% EOL		

9.2.5 Lynx D G2

Technical Data	GW5.1-BAT-D-G20	GW8.3-BAT-D-G20	GW5.1-BAT-D-G21	GW8.3-BAT-D-G21
Rated Energy (kWh)	5.12	8.32	5.12	8.32
Usable Energy (kWh)*1	5	8	5	8
Battery Type	LFP ($LiFePO_4$)			
Operating Voltage Range (V) (single phase system)	350~550			
Operating Voltage Range (V) (three phase system)	700~950			
Max. Input Current (System) (A)	12	19	12	19
Max. Output Current (System) (A)	13.2	21	13.2	21
Max. Input Power (System) (kW)*2	5	8	5	8
Max. Output Power (System) (kW)*2	5	8	5	8
Peak.Output Power (System) (kW)*2	7.5 @10s	12 @10s	7.5 @10s	12 @10s
Charging Temperature Range (°C)	-18~55		2~55	
Discharging Temperature Range (°C)	-20~55		-20~55	
Relative Humidity	5-95%			
Max. Operating Altitude (m)	4000			
Noise Emission (dB)	≤29			
Communication	CAN			

Technical Data		GW5.1-BAT-D-G20	GW8.3-BAT-D-G20	GW5.1-BAT-D-G21	GW8.3-BAT-D-G21
Weight (kg)		57.5±1	79±1	57.5±1	79±1
Dimensions (W×H×D mm)		800*326*270			
Optional Function Configuration		heating		/	
Ingress Protection		IP66			
Storage Temperature (℃)		-20 ~55			
Max. Storage time		12 months (-20℃~35℃)			
		6 months (35℃~45℃)			
Scalability		6 pcs			
Mounting Method		Floor stacked / Wall-mounted			
Cycle Life		≥6000 (25±2℃, 0.5C, 90%DOD, 70%EOL)			
Country of Manufacture		China			
Standard and Certification	Safety	IEC62619, IEC60730, EN62477，IEC63056，IEC62040，CE, CEC, VDE2510			
	EMC	CE, RCM			
	Transportation	UN38.3 ADR			

Technical Data	GW6.0-BAT-D-G20	GW9.0-BAT-D-G20
Battery Type	LFP (LiFePO4)	
Rated Capacity (Ah)	314Ah	
Rated Energy (kWh)	6	9
Usable Energy (kWh)*1	5.9	8.85
Nominal Voltage(V) (Battery)	19.2	28.8

Technical Data	GW6.0-BAT-D-G20	GW9.0-BAT-D-G20
Voltage Range(V) (Battery)	16.2~21.9	24.3~32.8
Operating Voltage Range (V) (single phase system)	350~550	
Operating Voltage Range (V) (three phase system)	700~950	
Max. Input Current (System) (A)	7.1	10.7
Max. Output Current (System) (A)	7.9	11.8
Max. Input Power (System) (kW)*2	3	4.5
Max. Output Power (System) (kW)*2	3	4.5
Peak Output Power (System) (kW)*2	4.5 (10s)	6.75 (10s)
Charging Temperature Range(℃)	-20~55	
Discharging Temperature Range (℃)	-20~55	
Relative Humidity	4-100%	
Max. Operating Altitude (m)	4000	
Noise Emission (dB)	≤27	
Communication	CAN&485	
Weight (kg)	61±1kg	77±1kg
Useable Extinguishing Agent	CO2, H2O	
Crucial Material	LiFePO4, C, Cu, LiPF6, Al, (C3H6)n	
Ingress Protection	IP66	
Protective Class	Ⅰ	
Dimensions (W×H×D mm)	800*326*270	
Function Configuration	Heating (Integrated); Aerosol fire extinguishing (Integrated)	
Storage Temperature (℃)	-20 ~55	

Technical Data		GW6.0-BAT-D-G20	GW9.0-BAT-D-G20
Max. Storage time		12 months (-20℃~35℃) 6 months (35℃~45℃)	
Scalability*3		12P	
Mounting Method		Floor stacked / Wall-mounted / Grounded	
Cycle Life		≥6000 （25±2℃ 0.5C 90%DOD 70%EOL）	
Country of Manufacture		China	
Standard and Certification	Safety	IEC62619, IEC60730, EN62477, IEC63056, IEC62040, CE, CEC, Regulation 2023/1542 , VDE2510-50	
	EMC	CE, RCM	
	Transportation	UN38.3 ADR	

*1: Test conditions, 100% DOD (cell 2.85~3.6V voltage range), 0.2P charge & discharge at 25±2 °C for battery system at the beginning of life. Usable energy is defined by its initial design value. Actual available energy may vary depending on charge/discharge rate, environmental conditions (e.g. temperature), transport and storage factors.
*2: Max. Input Power /Max. Output Power/Peak.Output Power derating will occur related to Temperature and SOC.
*3 For single-column stacked installations, the maximum number of parallel units is 6.

9.3 Smart Meter Technical Specifications

9.3.1 GM330

Technical Specifications		GM330
Measurement range	Supported Type of Electrical Supply System	Three-phase, split-phase, single-phase
	Voltage Range L-L (Vac)	172~817
	Voltage Range L-N (Vac)	100~472
	Nominal Frequency (Hz)	50/60

Technical Specifications		GM330
	CT ratio	nA:5A
Communication parameters	Communication method	RS485
	Communication distance (m/ft)	1000/3280
Accuracy parameters	Voltage/Current	Class 0.5
	Active energy	Class 0.5
	Reactive energy	Class 1
General parameters	Dimensions (WxHxD mm/in)	72x85x72/2.83x3.35×2.83
	Housing	4 modules
	Weight (g/lb)	240/0.53
	Mounting Method	DIN rail
	User Interface	4 LEDs, reset button
	Power Consumption (W)	≤5
Environmental Parameters	IP Rating	IP20
	Operating Temperature Range (℃/°F)	-30~+70/-22~+158
	Storage Temperature Range (℃/°F)	-30~70/-22~+158
	Relative Humidity (non-condensing)	0~95%
	Max. Operating Altitude (m/ft)	3000/9842
Certification Parameters	Certificates	UL1741/ANSI

9.3.2 GM3000

Technical Specifications		GM3000
Application		Three-phase
Voltage	Nominal Voltage	3L+N/400V
	Voltage Range	100V~240V
	Frequency	50Hz/60Hz

Current	Rated Current	CT in: 120A/40mA;
	Current Range	0.48A~120A
Power Consumption		<3W
Data Monitoring		Voltage/Current/Active Power/Reactive Power/Power Factor/Frequency
Energy Calculation		Active Power/Reactive Power
Accuracy	Voltage/Current	Class I
	Active Power	Class I
	Reactive Power	Class II
communication		RS485 (Maximum Rate9600/ModBusProtocol/Maximum Communication Cable Length100m)
Display		LED、USB、ResetButton
Equipment	Dimensions （Length x Width x Heightmm)	36 x 85 x 66.5
	Weight (g)	450
	Ingress Protection Rating	IP20(Indoor)
	Mounting Method	Backplate Mounting
Operating Temperature		-25 ~ +60° C
Storage Temperature		-25 ~ +60° C
Humidity		<95% Non-condensing
Operating Altitude(m)		< 2000m
Safe Service Life (years)		≥25

9.3.3 GMK330

Model	**GMK330**
Measurement range	
Supported Type of Electrical Supply System	1P2W/3P3W/3P4W
Operating Voltage (Vac)*	3P4W：90~264 L-N 3P3W：90~264 L-L

Model	GMK330
Frequency (Hz)	50/60
CT ratio	120A: 40mA 200A: 50mA*
Number of CTs	3
Accuracy parameters	
Voltage/Current	Class 0.5
Active energy	Class 0.5
Reactive energy	Class 1
Communication parameters	
Communication method	RS485
Communication Distance (m)	1000
General parameters	
Dimensions (W*H*D mm)	72*85*72
Housing	4 modules
Weight (g)	240
Mounting Method	DIN rail
User Interface	4 LEDs, reset button
Power Consumption (W)	< 5
Environmental Parameters	
IP Rating	IP20
Operating Temperature Range (℃)	-30-+70

Model	GMK330
Storage Temperature Range (℃)	-30-+70
Relative Humidity (No Condensation)	0-95%
Max. Operating Altitude (m)	3000

*Supports 1.1× voltage input.

9.4 Smart Communication Dongle Technical Specifications

9.4.1 4G Kit-CN-G21

Product Model	4G Kit-CN-G21
Device Management	
Maximum Number of Supported Inverters	1
Power Supply Parameters	
Input Voltage (V)	5
Power Consumption (W)	≤4
Interface Type	USB
Communication parameters	
4G/3G/2G	LTE-FDD：B1/B3/B5/B8 LTE-TDD：B34/B39/B40/B41
GNSS Positioning	BeiDou, GPS
Bluetooth	Bluetooth V5.0
Mechanical Parameters	
Dimensions (W×H×D mm)	48.3*95.5*32.1
Weight (g)	87
Indicator light	LED* 2

Product Model	4G Kit-CN-G21
Mounting Method	Plug and Play
SIM Card Size	Micro sim, 15mm*12mm
Environmental Parameters	
Operating Temperature Range (℃)	-30~+65
Storage Temperature Range (℃)	-40~+70
Relative Humidity	0-100%
IP Rating	IP66
Max. Operating Altitude (m)	4000
Standards Complied With	
Certification	SRRC、CTA

9.4.2 4G Kit-CN-G20

Product Model	4G Kit-CN-G20
Device Management	
Maximum Number of Supported Inverters	1
Power Supply Parameters	
Input Voltage (V)	5
Power Consumption (W)	≤4
Interface Type	USB
Communication parameters	
4G/3G/2G	LTE-FDD：B1/B3/B5/B8 LTE-TDD：B34/B39/B40/B41
GNSS Positioning	/
Bluetooth	Bluetooth V5.0
Mechanical Parameters	
Dimensions (W×H×D mm)	48.3*95.5*32.1
Weight (g)	87

Product Model	4G Kit-CN-G20
Indicator light	LED* 2
Mounting Method	Plug and Play
SIM Card Size	Micro sim, 15mm*12mm
Environmental Parameters	
Operating Temperature Range (℃)	-30~+65
Storage Temperature Range (℃)	-40~+70
Relative Humidity	0-100%
IP Rating	IP66
Max. Operating Altitude (m)	4000
Standards Complied With	
Certification	SRRC、CTA

9.4.3 WiFi/LAN Kit-20

Technical Specifications		WiFi/LAN Kit-20
Output Voltage (V)		5
Power Consumption (W)		≤2
Communication Interface		USB
Communication Parameters	Ethernet	10M/100Mbps adaptive
	Wireless	IEEE 802.11 b/g/n @2.4 GHz
	Bluetooth	Bluetooth V4.2 BR/EDR and Bluetooth LE standard
Mechanical Parameters	Dimensions (W×H×D mm)	48.3*159.5*32.1
	Weight (g)	82
	Ingress Protection Rating	IP65
	Mounting Method	USB Port Insertion/Removal
Operating Temperature Range (℃)		-30~+60
Storage Temperature Range (℃)		-40~+70

Technical Specifications	WiFi/LAN Kit-20
Relative Humidity	0-95%
Max. Operating Altitude (m)	4000

9.5 Ezmanager3000 Technical Specifications

Model	EzManager3000
Device Management	
Energy Storage Inverter	≤ 4
Grid-tied Inverter	≤ 4
EV Charger	≤ 2
Heat Pump	1 (SG-Ready)
Shelly Device	≤ 12
Power Supply	
Power Adapter	AC Input: 100–240 V, 50/60 Hz DC Output: 12 V
DC Input (V)	12V
Power Consumption (W)	≤7
Communication Interface	
RS485	COM*4
LAN	1
WIFI	802.11 b/g/n
Bluetooth	Bluetooth 5.2
Digital/Analog Input/Output	DI*4、DO*2、CAN*1、AI*1
Power Output Port	12V, 100mA
Communication Protocols	
Ethernet	Modbus-TCP
RS485	Modbus-RTU
User Interface	
LED	LED*4
USB	USB 2.0*1
Mechanical Parameters	
Dimensions (W×H×D mm)	99*85.6*71
Weight (kg)	0.2

Model	EzManager3000
Mounting Method	Wall-mounted, DIN rail, desktop installation
Environmental Parameters	
Operating Temperature Range (℃)	-30~+60
Storage Temperature Range (℃)	-40~+70
Relative Humidity	0 ~ 95% (non-condensing)
Max. Operating Altitude (m)	3000
Ingress Protection Rating	IP20
Standards Complied With	
Certification	CE-RED（EN18031）、RCM

10 Appendix

10.1 FAQ

10.1.1 How to Perform Meter/CT Auxiliary Detection?

The Meter Connect Check function can check whether the meter CT is connected correctly, as well as the current operating status of the meter and CT.

- Method 1:

1. Go to**[Home]** > **[Settings]** > **[Meter/CT Auxiliary Detection]**, then enter the detection page.
2. Click Start Detection, wait for detection to complete, and then view the detection result.

- Method 2:

1. Tap > **[System Setup]** > **[Quick Setting]** > **[Meter/CT Assisted Test]**, then enter the detection page.
2. Click Start Detection, wait for detection to complete, and then view the detection result.

10.1.2 How to Upgrade the Device Version

Via Firmware Information, you can view or upgrade:
The inverter's DSP version and ARM version, communication module software version, battery BMS version, DCDC version, etc.

- **Prompted Upgrade:**

When the user opens the App, an upgrade prompt pops up on the home page, and the user can choose whether to upgrade. If the user chooses to upgrade, follow the on-screen prompts to complete the upgrade.

- **Regular Upgrade:**

Go to**[Home]** > **[Settings]** > **[Firmware Information]**, then enter the firmware information viewing page.

Click Check for Updates. If a new version is available, follow the on-screen prompts to complete the upgrade.

- **Forced Upgrade:**

The App pushes upgrade information. Users need to upgrade as prompted; otherwise, the App cannot be used. Follow the on-screen prompts to complete the upgrade.

Inverter Software Version Upgrade

- The inverter supports software upgrade via aUflash drive.
- When usingUflash drive, please contact the after-sales service center to obtain the software upgrade package and upgrade method.

10.2 Abbreviations

Abbreviation	English Description	Chinese Description
Ubatt	Battery Voltage Range	Battery Voltage Range
Ubatt,r	Nominal Battery Voltage	Rated Battery Voltage
Ibatt,max (C/D)	Max. Charging Current Max. Discharging Current	Max. Charge/Discharge Current
EC,R	Rated Energy	Rated Energy
UDCmax	Max.Input Voltage	Max. Input Voltage
UMPP	MPPT Operating Voltage Range	MPPT Voltage Range
IDC,max	Max. Input Current per MPPT	Max. Current from Grid per MPPT
ISC PV	Max. Short Circuit Current per MPPT	Max. Short-Circuit Current per MPPT
PAC,r	Nominal Output Power	Rated output power
Sr (to grid)	Nominal Apparent Power Output to Utility Grid	Rated Apparent Power Output to Grid
Smax (to grid)	Max. Apparent Power Output to Utility Grid	Max. Apparent Power Output to Grid
Sr (from grid)	Nominal Apparent Power from Utility Grid	Rated Apparent Power to Grid for Grid Purchase

Abbreviation	English Description	Chinese Description
Smax (from grid)	Max. Apparent Power from Utility Grid	Max. Apparent Power to Grid for Grid Purchase
UAC,r	Nominal Output Voltage	Rated output voltage
fAC,r	Nominal AC Grid Frequency	Output Voltage Frequency
IAC,max(to grid)	Max. AC Current Output to Utility Grid	Max. Grid-Tied Output Current
IAC,max(from grid)	Max. AC Current From Utility Grid	Max. Current from Grid
P.F.	Power Factor	Power Factor
Sr	Back-up Nominal apparent power	Off-Grid Rated Apparent Power
Smax	Max. Output Apparent Power (VA) Max. Output Apparent Power without Grid	Max. Apparent Power to Grid
IAC,max	Max. Output Current	Max. Current to Grid
UAC,r	Nominal Output Voltage	Max. Output Voltage
fAC,r	Nominal Output Freqency	Rated Output Voltage Frequency
Toperating	Operating Temperature Range	Operating Temperature Range
IDC,max	Max. Input Current	Max. Current from Grid
UDC	Input Voltage	Input Voltage
UDC,r	DC Power Supply	DC Input
UAC	Power Supply/AC Power Supply	Input Voltage Range/AC Input
UAC,r	Power Supply/Input Voltage Range	Input Voltage Range/AC Input
Toperating	Operating Temperature Range	Operating Temperature Range
Pmax	Max Output Power	Maximum Power
PRF	TX Power	Transmit Power
PD	Power Consumption	Power Consumption
PAC,r	Power Consumption	Power Consumption
F (Hz)	Frequency	Frequency
ISC PV	Max. Input Short Circuit Current	Maximum Input Short-Circuit Current

Abbreviation	English Description	Chinese Description
Udcmin-Udcmax	Range of input Operating Voltage	Operating Voltage Range
UAC,rang(L-N)	Power Supply Input Voltage	Adapter Input Voltage Range
Usys,max	Max System Voltage	Maximum System Voltage
Haltitude,max	Max. Operating Altitude	Max. Operating Altitude
PF	Power Factor	Power Factor
THDi	Total Harmonic Distortion of Current	Current Harmonics
THDv	Total Harmonic Distortion of Voltage	Voltage Harmonics
C&I	Commercial & Industrial	Commercial and Industrial
SEMS	Smart Energy Management System	Smart Energy Management System
MPPT	Maximum Power Point Tracking	Maximum Power Point Tracking
PID	Potential-Induced Degradation	Potential Induced Degradation
Voc	Open-Circuit Voltage	Open Circuit Voltage
Anti PID	Anti-PID	Anti-PID
PID Recovery	PID Recovery	PID Recovery
PLC	Power-line Commucation	Power Line Communication
Modbus TCP/IP	Modbus Transmission Control / Internet Protocol	Modbus over TCP/IP
Modbus RTU	Modbus Remote Terminal Unit	Modbus over Serial Line
SCR	Short-Circuit Ratio	Short Circuit Ratio
UPS	Uninterruptable Power Supply	Uninterruptible Power Supply
ECO mode	Economical Mode	ECO Mode
TOU	Time of Use	Usage Time
ESS	Energy Stroage System	Energy Storage System
PCS	Power Conversion System	Power Conversion System
RSD	Rapid shutdown	Rapid Shutdown
EPO	Emergency Power Off	Emergency Power Off
SPD	Surge Protection Device	Lightning Protection
ARC	zero injection/zero export Power Limit / Export Power Limit	Power Limit

Abbreviation	English Description	Chinese Description
DRED	Demand Response Enabling Device	Command Response Device
RCR	Ripple Control Receiver	-
AFCI	AFCI	AFCI DC Arc Fault Protection
GFCI	Ground Fault Circuit Interrupter	Grounding Failure Circuit Interrupter
RCMU	Residual Current Monitioring Unit	Residual Current Monitoring Device
FRT	Fault Ride Through	Fault Ride-Through
HVRT	High Voltage Ride Through	High Voltage Ride-Through
LVRT	Low Voltage Ride Through	Low Voltage Ride-Through
EMS	Energy Management System	Energy Management System
BMS	Battery Management System	Battery Management System
BMU	Battery Measure Unit	Battery Acquisition Unit
BCU	Battery Control Unit	Battery Control Unit
SOC	State of Charge	Battery State of Charge
SOH	State of Health	Battery State of Health
SOE	State Of Energy	Battery Remaining Energy
SOP	State Of Power	Battery Charge and Discharge Capability
SOF	State Of Function	Battery State of Function
SOS	State Of Safety	Safety Status
DOD	Depth of discharge	Depth of Discharge

10.3 Terminology Explanation

- **Overvoltage Category Explanation**
  - **Overvoltage Category I**: Equipment connected to circuits where measures are taken to limit transient overvoltages to a suitably low level.
  - **Overvoltage Category II**: Energy-consuming equipment supplied by a fixed installation. Such equipment includes appliances, portable tools, and other household and similar loads; if special requirements for the reliability and availability of such equipment apply, Overvoltage Category III is used.
  - **Overvoltage Category III**: Equipment in fixed installations where the reliability and availability of the equipment must meet special requirements. Includes switchgear and controlgear in fixed installations and industrial equipment permanently connected to fixed installations.

- **Overvoltage Category IV**: Equipment used upstream of the power supply of a distribution installation, including measuring instruments and upstream overcurrent Protection devices, etc.

- **Explanation of Wet Location Categories**

Environmental Parameters	Class		
	3K3	4K2	4K4H
Temperature Range	0~+40℃	-33~+40℃	-33~+40℃
Humidity Range	5% to 85%	15% to 100%	4% to 100%

- **Environmental Category Explanation:**
  - **Outdoor Inverter**: The ambient air temperature range is -25 to +60°C, suitable for environments with Pollution Degree 3;
  - **Indoor Type II inverter**: ambient air temperature range -25 to +40°C, suitable for environments with Pollution Degree 3;
  - **Indoor Type I inverter**: ambient air temperature range 0 to +40°C, suitable for environments with Pollution Degree 2;
- **Pollution Degree Category Explanation**
  - **Pollution Degree 1**: no pollution or only dry, non-conductive pollution;
  - **Pollution Degree 2**: generally only non-conductive pollution occurs, but temporary conductive pollution caused by occasional condensation must be considered;
  - **Pollution Degree 3**: conductive pollution, or non-conductive pollution that becomes conductive due to condensation;
  - **Pollution Degree 4**: persistent conductive pollution, such as pollution caused by conductive dust or rain and snow.

10.4 Meaning of Battery SN Code



LXD10DSC0002

Digits 11–14 of the product SN code are the production time code.
The production date in the above figure is 2023-08-08.

- The 11th and 12th digits are the last two digits of the production year, e.g., 2023 is represented by 23;
- The 13th digit is the production month, e.g., August is represented by 8;
  Details are as follows:

Month	January to September	October	November	December
Month Code	1~9	A	B	C

- The 14th digit is the production day, e.g., the 8th is represented by 8;
  Numbers are preferred, e.g., 1–9 represents the 1st–9th day, A represents the 10th day, and so on. The letters I and O are not used to avoid confusion. Details are as follows:

Production Day	1	2	3	4	5	6	7	8	9
Code	1	2	3	4	5	6	7	8	9

Production Day	10	11	12	13	14	15	16	17	18
Code	A	B	C	D	E	F	G	H	J

Production Day	21	22	23	24	25	26	27	28	29
Code	M	N	P	Q	R	S	T	U	V

10.5 Safety Regulation Country

No.	Safety standard name	No.	Safety standard name
Europe			
1	IT-CEI 0-21	56	IE-LV-72A
2	IT-CEI 0-16	57	IE-ESB-C&D(< 110kV)
3	DE LV with PV	58	IE-EirGrid-110kV

No.	Safety standard name	No.	Safety standard name
4	DE LV without PV	59	PT-D
5	DE-MV	60	EE
6	ES-A	61	NO
7	ES-B	62	FI-A
8	ES-C	63	FI-B
9	ES-D	64	FI-C
10	ES-island	65	FI-D
11	BE	66	UA-A1
12	FR-LV	67	UA-A2
13	FR-island-50Hz	68	EN 50549-1
14	FR-island-60Hz	69	EN 50549-2
15	type A-PL_V.1.1	70	DK-West-B-MVHV
16	type B-LV-PL_V.1.1	71	DK-East-B-MVHV
17	type C-PL_V.1.1	72	DK-West-C-MVHV
18	type D-PL_V.1.1	73	DK-East-C-MVHV
19	NL-16/20A	74	DK-West-D-MVHV
20	NL-A	75	DK-East-D-MVHV
21	NL-B	76	FR-Reunion
22	NL-C	77	BE-LV（>30kVA）
23	NL-D	78	BE-HV
24	SE-A	79	CH-B
25	SE MV	80	NI-G99-A
26	SK-A	81	NI-G99-B

No.	Safety standard name	No.	Safety standard name
27	SK-B	82	NI-G99-C
28	SK-C	83	NI-G99-D
29	HU	84	IE-LV-170kVA
30	CH-A	85	IE-MV&HV-200kVA
31	CY	86	DE-HV
32	GR	87	FR-MV
33	DK-West-A	88	CZ-A1/A2-09
34	DK-East-A	89	DE-EHV
35	DK-West-B	90	IE-EirGrid-400KV
36	DK-East-B	91	IE-EirGrid-220KV
37	AT < 1kV	92	IE-EirGrid-66KV
38	AT > 1kV	93	IE-ESB-B
39	BG	94	IE-ESB-D(≥110kV)
40	Czech	95	type B-MV-PL_V.1.1
41	CZ-A1-09	96	GB-G99-A HV
42	CZ-A2-09	97	GB-G99-B LV
43	CZ-B1/B2-09	98	GB-G99-C LV
44	CZ-C	99	UA-B
45	CZ-D	100	UA-C
46	RO-A	101	UA-D
47	RO-B	102	UK-G98
48	RO-D	103	UK-G99-A LV
49	GB-G98	104	UK-G99-B LV

No.	Safety standard name	No.	Safety standard name
50	GB-G99-A LV	105	UK-G99-C LV
51	GB-G99-B HV	106	CZ-A1
52	GB-G99-C HV	107	UK-A-MV
53	GB-G99-D	108	UK-B-MV
54	NI-G98	109	UK-C-MV
55	IE-LV-16/25A	-	-
Global			
1	60Hz-Default	6	IEC 61727-60Hz
2	50Hz-Default	7	Warehouse
3	127Vac-60Hz-Default	8	IEC61727-480Vac-60Hz
4	127Vac-50Hz-Default	9	IEC61727-480Vac-50Hz
5	IEC 61727-50Hz		
Americas			
1	Argentina-220V-LV	38	LUMAPR-2024-220Vac-3P
2	US-208Vac	39	LUMAPR-2024-240Vac-3P
3	US-240Vac	40	Cayman
4	Mexico-220Vac	41	Brazil-220Vac
5	Mexico-440Vac	42	Brazil-208Vac
6	US-480Vac	43	Brazil-230Vac
7	US-208Vac-3P	44	Brazil-240Vac
8	US-220Vac-3P	45	Brazil-254Vac
9	US-240Vac-3P	46	Brazil-127Vac
10	US-CA-208Vac	47	Brazil-ONS
11	US-CA-240Vac	48	Barbados

No.	Safety standard name	No.	Safety standard name
12	US-CA-480Vac	49	Chile-BT
13	US-CA-208Vac-3P	50	Chile-MT-A
14	US-CA-220Vac-3P	51	Chile MT-B
15	US-CA-240Vac-3P	52	Colombia
16	US-HI-208Vac	53	Colombia<0.25MW-208Vac-1P
17	US-HI-240Vac	54	Colombia<0.25MW-120Vac-3P
18	US-HI-480Vac	55	IEEE 1547-208Vac
19	US-HI-208Vac-3P	56	IEEE 1547-220Vac
20	US-HI-220Vac-3P	57	IEEE 1547-240Vac
21	US-HI-240Vac-3P	58	IEEE 1547-230Vac
22	US-Kauai-208Vac	59	Colombia<0.25MW-127Vac-3P
23	US-Kauai-240Vac	60	Colombia>5MW
24	US-Kauai-480Vac	61	Mexico-127V
25	US-Kauai-208Vac-3P	62	Mexico-240V
26	US-Kauai-220Vac-3P	63	US-O&R-208Vac
27	US-Kauai-240Vac-3P	64	US-O&R-240Vac
28	US-ISO-NE-208Vac	65	US-O&R-480Vac
29	US-ISO-NE-240Vac	66	US-O&R-208Vac-3P
30	US-ISO-NE-480Vac	67	US-O&R-220Vac-3P
31	US-ISO-NE-208Vac-3P	68	US-O&R-240Vac-3P
32	US-ISO-NE-220Vac-3P	69	Brazil-277Vac
33	US-ISO-NE-240Vac-3P	70	Chile-BT ≤9MW
34	LUMAPR-2024-208Vac	71	Chile-MT ≤9MW

No.	Safety standard name	No.	Safety standard name
35	LUMAPR-2024-240Vac	72	Chile > 9MW
36	LUMAPR-2024-480Vac	73	Mexico-277Vac
37	LUMAPR-2024-208Vac-3P		
Oceania			
1	Australia-A	4	Newzealand
2	Australia-B	5	Newzealand:2015
3	Australia-C	6	NZ-GreenGrid
Asia			
1	China A	33	Israel-MV
2	China B	34	Israel-HV
3	China Higher Voltage	35	Vietnam
4	China Highest Voltage	36	Malaysia-LV
5	China Power Station	37	Malaysia-MV
6	China Shandong	38	DEWA-LV
7	China Hebei	39	DEWA-MV
8	China PCS	40	Saudi Arabia-220V-LV
9	Taiwan	41	JP-690Vac-50Hz
10	Hong Kong	42	JP-690Vac-60Hz
11	China Northeast	43	Srilanka-MV/HV
12	Thailand-MEA	44	IEC 61727-127Vac-50Hz
13	Thailand-PEA	45	IEC 61727-127Vac-60Hz
14	Mauritius	46	JP-550Vac-50Hz
15	Korea	47	JP-550Vac-60Hz
16	India	48	India-Higher

No.	Safety standard name	No.	Safety standard name
17	India-CEA	49	JP-220Vac-50Hz
18	Pakistan	50	JP-220Vac-60Hz
19	Philippines	51	Saudi Arabia-127V-LV
20	Philippines-127Vac	52	Srilanka-LV >1MW
21	JP-200Vac-50Hz	53	China-YN
22	JP-200Vac-60Hz	54	GB/T 29319-LV
23	JP-440Vac-50Hz	55	GB/T 29319-MV
24	JP-440Vac-60Hz	56	Philippines-277Vac
25	JP-420Vac-50Hz	57	JP-360Vac-50Hz
26	JP-420Vac-60Hz	58	JP-360Vac-60Hz
27	JP-480Vac-50Hz	59	JP-320Vac-50Hz
28	JP-480Vac-60Hz	60	JP-320Vac-60Hz
29	Srilanka-LV<1MW	61	JP-340Vac-50Hz
30	Singapore	62	JP-340Vac-60Hz
31	Israel-OG	63	JP-380Vac-50Hz
32	Israel-LV	64	JP-380Vac-60Hz
Africa			
1	Mauritius	5	Ghana-LV
2	South Africa-LV	6	Ghana-HV
3	South Africa-B-MV	7	South Africa-A3-LV
4	South Africa-C-MV	8	Nigeria

10.6 Australia Safety Regulations

For the Australian market, to comply with AS/NZS 4777.2:2020, please select from

Australia A, Australia B, Australia C, or New Zealand. Please contact your local electricity grid operator on which Region to select.
Selecting a Region B should then automatically load all region B setpoints for volt-watt, volt-var, underfrequency, overfrequency, etc.

Volt–var response set-point values

Region	Default value	U1	U2	U3	U4
Australia A	Voltage	207V	220V	240V	258V
	Inverter reactive power level (Q) % of S_{rated}	44 % supplying	0%	0%	60 % absorbing
Australia B	Voltage	205V	220V	235V	255V
	Inverter reactive power level (Q) % of S_{rated}	30 % supplying	0%	0%	40 % absorbing
Australia C	Voltage	215V	230V	240V	255V
	Inverter reactive power level (Q) % of S_{rated}	44 % supplying	0%	0%	60 % absorbing
New Zealand	Voltage	207V	220V	235V	244 V
	Inverter reactive power level (Q) % of S_{rated}	60 % supplying	0%	0%	60 % absorbing
Allowed range	Voltage	180 to 230 V	180 to 230 V	230 to 265 V	230 to 265 V
	Inverter reactive power level (Q) % of S_{rated}	30 to 60 % supplying	0%	0%	30 to 60 % absorbing

NOTE 1: Inverters may operate at a reactive power level with a range up to 100 % supplying or absorbing.

NOTE 2: Australia C parameter set is intended for application in isolated or remote power systems.

Volt–watt response default set-point values

Region	Default value	U3	U4
Australia A	Voltage	253V	260V
	Inverter maximum active power output level (P) % of S_{rated}	100%	20%
Australia B	Voltage	250V	260V
	Inverter maximum active power output level (P) % of S_{rated}	100%	20%
Australia C	Voltage	253V	260V
	Inverter maximum active power output level (P) % of S_{rated}	100%	20%
New Zealand	Voltage	242 V	250V
	Inverter maximum active power output level (P) % of S_{rated}	100%	20%
Allowed range	Voltage	235 to 255 V	240 to 265 V
	Inverter maximum active power output level (P) % of S_{rated}	100%	20%

NOTE: Australia C parameter set is intended for application in isolated or remote power systems.

Passive anti-islanding voltage limit values

Protective function	Protective function limit	Trip delay time	Maximum disconnection time
Undervoltage 2 (V < <)	70 V	1 s	2 s

Protective function	Protective function limit	Trip delay time	Maximum disconnection time
Undervoltage 1 (V <)	180 V	10 s	11 s
Overvoltage 1 (V >)	265 V	1 s	2 s
Overvoltage 2 (V > >)	275V	-	0.2 s

Upper connection and reconnection frequency (f_{URF})

Region	f_{URF}
Australia A	50.15 Hz
Australia B	50.15 Hz
Australia C	50.50 Hz
New Zealand	50.15 Hz

Setting steps:
Step 1: Set the safety code to Australia A/B/C/New Zealand on Quick Settigs page based on actual needs.
Step 2: Set the frequency parameters accordingly.

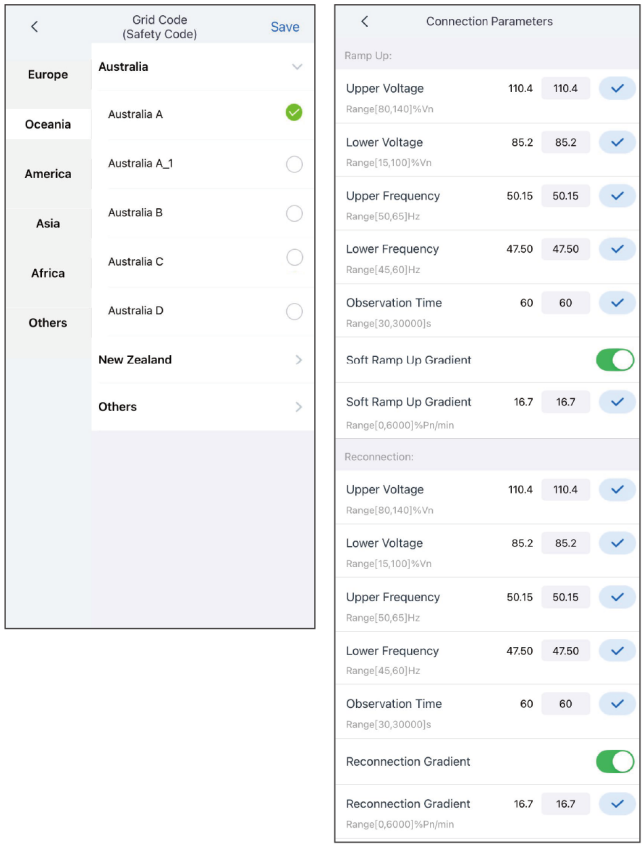

SLG00CON0144

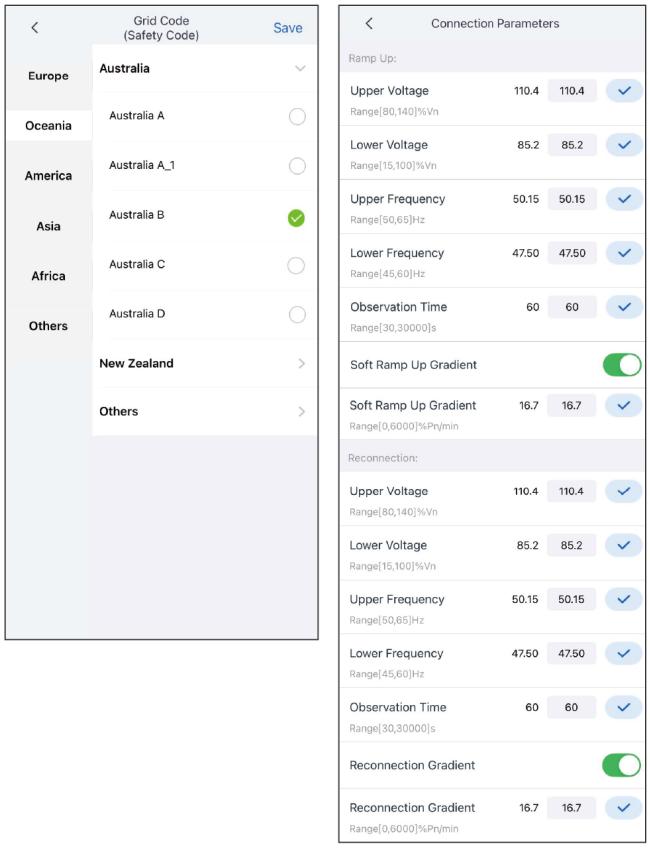

SLG00CON0146

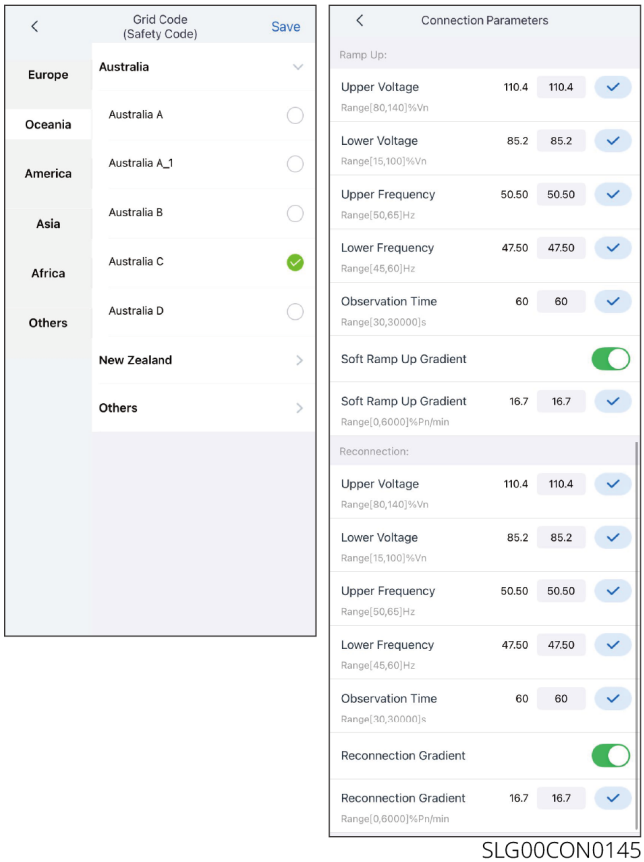

SLG00CON0145

11 Contact Details

GoodWe Technologies Co., Ltd.
No. 90 Zijin Rd., New District, Suzhou, China
en.goodwe.com
service@goodwe.com